PARTS

YANMAR

# YANMAR 굴삭기

# ViO30-6B

# PARTS CATALOG

YK건기

YANMAR

# PARTS CATALOG

0CS10-M58500EN

Last update Feb., 2025

## Precautions

1. Some of the illustrations in this parts catalog are simplified.

2. Depending on the specifications of your product, the actual product and parts catalog may not match.

3. Please use genuine parts when repairing the product.

4. When ordering spare parts, please confirm the specifications (model name, serial number, part number, quantity, etc.) and confirm with your distributors or dealers.

5. Please refer to the user manual or service manual for information on how to replace parts, technical information, and other related details.

6. If you are using a booklet or PDF parts catalog, you must verify the latest information via the online parts catalog.

## Disclaimer

1. Our company will not assume any responsibility for the matters stipulated in each of the following items.

   1) The contents provided in this parts catalog may not correspond with the latest products due to changes in regulations, product specifications, or other amendments.

   2) The illustrations of the products listed in this parts catalog (including 3D images) are for image purposes only and may differ from the actual product and specifications.

   3) This parts catalog does not guarantee conformity to the customer's requirements.

   4) In addition to the previous items, we do not guarantee the accuracy, completeness, assurance, applicability, usefulness, availability, safety or reliability of this parts catalog.

2. Our company assumes no responsibility whatsoever for any damage or disadvantage suffered by customers or others due to the addition, modification, suspension, cancellation, or discontinuation, etc., of the contents of this parts catalog. ("Damages" includes, but is not limited to, loss of opportunities for use of this parts catalog, as well as consequential damages, indirect damages, special damages, future damages and any loss of profits or any other disadvantages or damages.)

3. Customers are requested to use this parts catalog at their own risk. Our company assumes no responsibility whatsoever for any damages incurred by customers or other companies as a result of using or not using this parts catalog.

4. When using this parts catalog, you must comply with the laws and regulations applicable in the country or region in which you use it. Our company assumes no responsibility for any violations of laws and regulations by the customer.

# PREFACE

1. This Parts Catalog carries Yanmar excavator (crawler back-hoe) VIO30-6B for Korea.
   (M/# 60501～)

2. Parts catalog history

| | | Parts catalog NO. | Published | Remarks |
|---|---|---|---|---|
| 1st edition | Vehicle | 0CS10-G58500 | Dec.,2012 | |
| | Engine | 0CB10-G80400 | | |

3. Your understanding is asking that this parts catalog is not a technical data manual setting forth as servicing procedures, This parts catalog is using simplified illustration.
   Be sure to use Yanmar Genuine Parts in your maintenance servicing of Yanmar products.
   Be careful not to use the simple parts available in the market, otherwise their use in repairing causes such as an early breakage, for instance.

# VEHICLE PAINTED COLOR

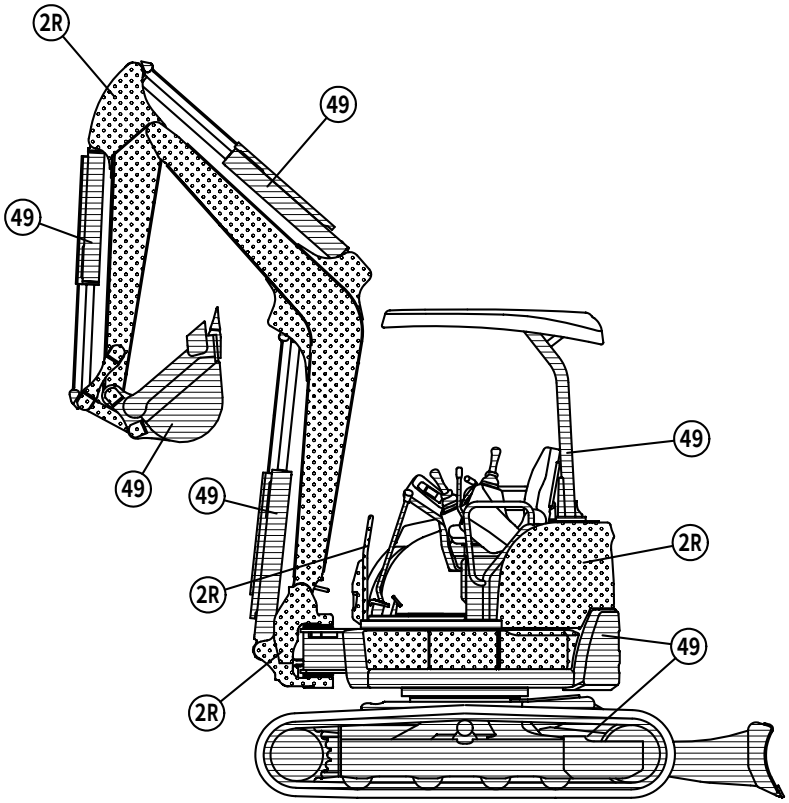


| Color Code | Desc-ription | Painted Color | Paint Part No. | | |
|---|---|---|---|---|---|
| | | | 16L Can | 4L Can | SPRAY |
| 2R | | YANMAR Turmeric Yellow | ------- | 977620-41001 | 977620-41002 |
| 49 | | YANMAR Navy Gray | ------- | TOR-91390000 | TOR-94800490 |

# PICTURESQUE INDEX(1) ▪ ▪ ▪ MAIN PARTS


1. LABEL & ACCESSORY
Fig. 1～5, 117, 118, 146

14. OPTIONAL & KIT
Fig. 109～115


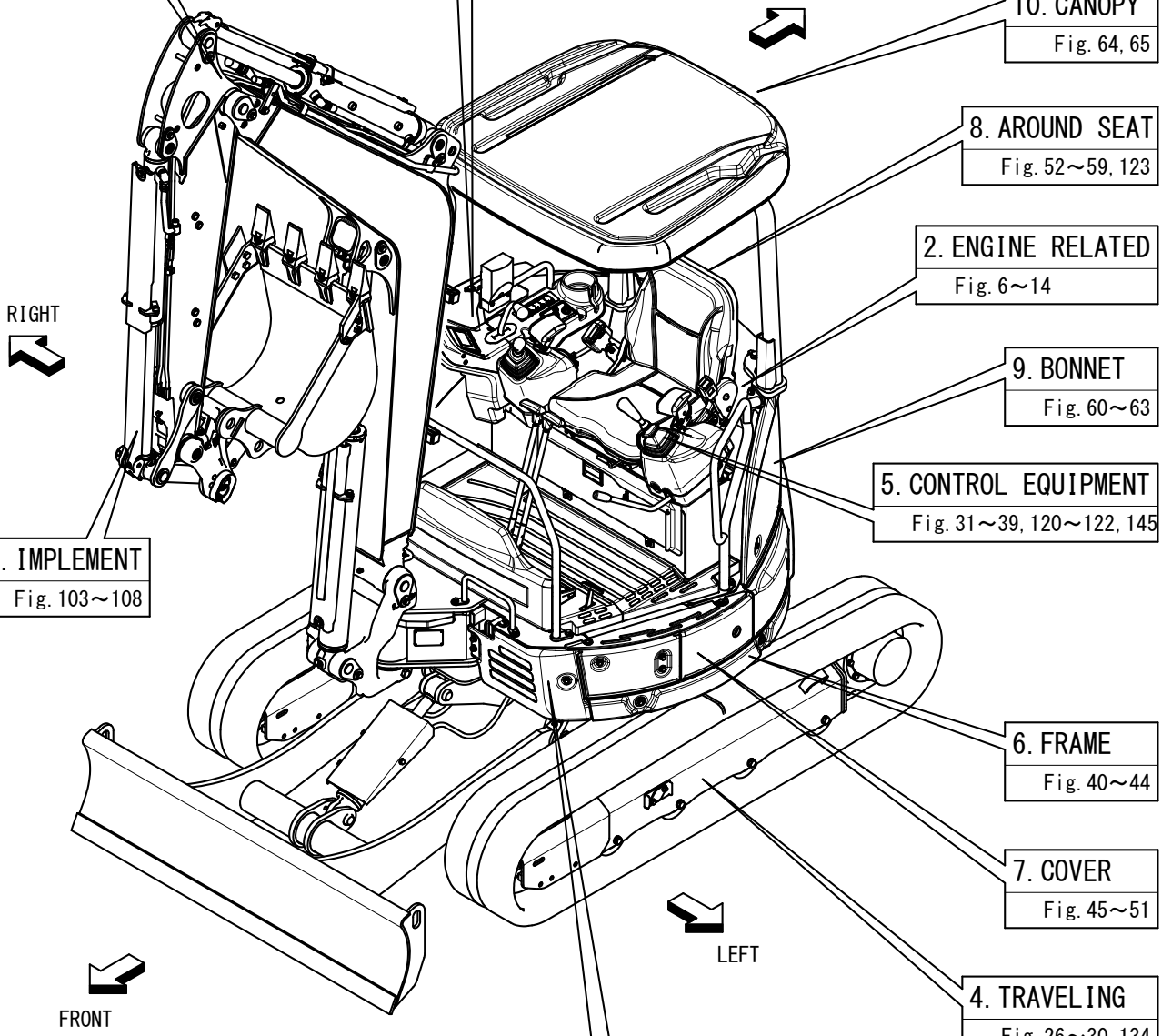



12. HYDRAULIC OIL PIPING
Fig. 85～99, 101, 102, 133, 136

3. ELECTRICAL PARTS
Fig. 15～25, 119, 137, 143, 144

10. CANOPY
Fig. 64, 65

8. AROUND SEAT
Fig. 52～59, 123

2. ENGINE RELATED
Fig. 6～14

9. BONNET
Fig. 60～63

5. CONTROL EQUIPMENT
Fig. 31～39, 120～122, 145

13. IMPLEMENT
Fig. 103～108

6. FRAME
Fig. 40～44

7. COVER
Fig. 45～51

4. TRAVELING
Fig. 26～30, 134

11. HYDRAULIC OIL EQUIPMENT
Fig. 66～84, 100, 116, 124～132, 135, 138～142

# PICTURESQUE INDEX(2) ▪ ▪ ▪ HYDRAULIC SECTION

HYD. OIL PIPING Fig. 85～96, 136

CONTROL PIPING Fig. 97, 133

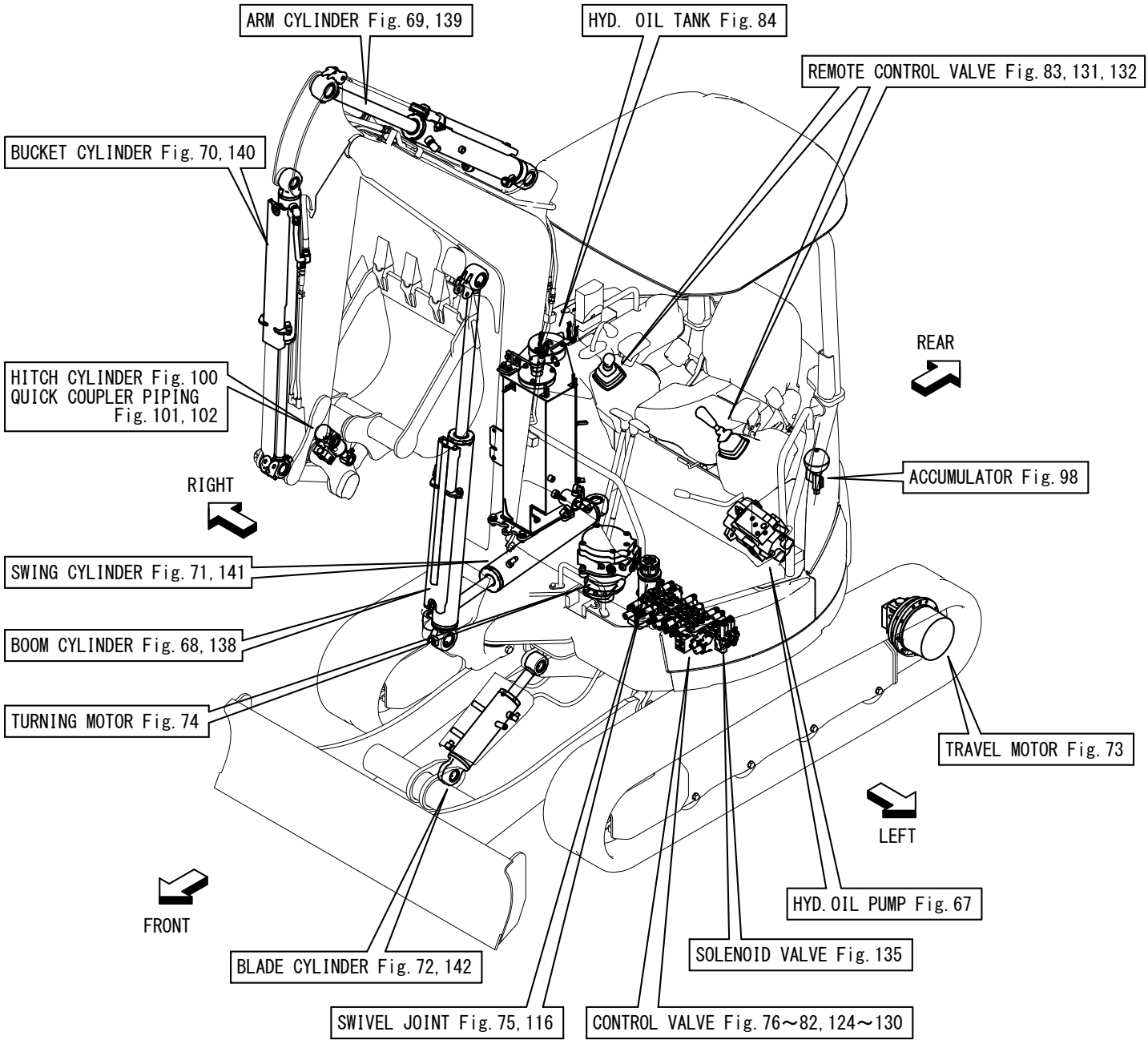

# Contents




Fig. No. Fig. Name

LABEL & ACCESSORY

1. LABEL(EXTERIOR)(TO M60543)
117. (1A)LABEL(EXTERIOR)(P.T.O. HAND OPERATE SPEC.)(FROM M60544)
2. LABEL(BONNET INSIDE)
3. LABEL(CANOPY)(TO M60543)
118. (3A)LABEL(CANOPY)(P.T.O. HAND OPERATE SPEC.)(FROM M60544)
4. LABEL(QUICK COUPLER)
5. TOOL CASE(METAL)
146. (5A)TOOL CASE(RESIN)

ENGINE RELATED

6. MUFFLER
7. AIR CLEANER
8. ACCELERATOR
9. ENGINE MOUNT
10. RADIATOR SHURAUD
11. RADIATOR & OIL COOLER
12. DUCT
13. FUEL TANK
14. FUEL LINE

ELECTRICAL PARTS

15. BATTERY
16. AROUND THE ENGINE(TO M60570)
137. (16A)AROUND THE ENGINE(FROM M60571)
17. ELECTRIC PARTS(LOW-HIGH SWITCH)(TO M60543)
18. ELECTRIC PARTS(HORN)
19. ELECTRIC PARTS(SEAT MOUNT)
20. ELECTRIC PARTS(GUIDE HARNESS)
21. ELECTRIC PARTS(STARTER)
143. (21A)ELECTRIC PART(STARTER)(MULTI KIND OF KEY)
22. ELECTRIC PARTS(A/D)
23. ELECTRIC PARTS(QUICK COUPLER : SWITCH BOX)
24. ELECTRIC PARTS(WORK LAMP)
119. (24A)ELECTRIC PARTS(FRONT LAMP)(FROM M60544)
25. ELECTRIC PARTS(INSTRUMENT PANEL)
144. (25A)TRAVEL ALARM

TRAVELING

26. SPROCKET
27. IDLER & ADJUST
28. TRACK ROLLER(Y SPEC.)(TO M60593)
134. (28A)TRACK ROLLER(K SPEC.)(FROM M60594)
29. CARRIER ROLLER
30. CRAWLER

CONTROL EQUIPMENT

31. MOUNT(VALVE)
32. CONTROL EQUIPMENT(TRAVEL LEVER)
33. CONTROL EQUIPMENT(SWING PEDAL)

# Contents




Fig. No. Fig. Name

34. CONTROL EQUIPMENT(LO-HIGH PEDAL)(TO M60543)
35. CONTROL EQUIPMENT(PEDAL COVER)(TO M60543)
120. (35A)CONTROL EQUIPMENT(PEDAL COVER)(P.T.O. HAND OPERATE SPEC.)(FROM M60544)
145. (35B)PEDAL COVER(WITHOUT P.T.O. SPEC.)
36. CONTROL EQUIPMENT(ARM REST)
37. CONTROL EQUIPMENT(BLADE LEVER)(TO M60543)
121. (37A)CONTROL EQUIPMENT(BLADE LEVER)(LOW-HIGH SWITCH)(FROM M60544)
38. CONTROL EQUIPMENT(LOCK LEVER & STAND)
122. (38A)CONTROL EQUIPMENT(LEVER SPACER)(P.T.O. HAND OPERATE SPEC.)(FROM M60544)
39. CONTROL EQUIPMENT(P.T.O. PEDAL)

FRAME

40. TRACK FRAME
41. COUNTER WEIGHT
42. ADD WEIGHT
43. TURNING FRAME
44. TURNING BEARING

COVER

45. COVER(FRONT)
46. COVER(MULTI)
47. COVER(UPPER)
48. COVER(TURNING FRAME)
49. COVER(TRACK FRAME)
50. GUARD(FRAME)

Fig. No. Fig. Name

51. COVER(FRAME FRONT)

AROUND SEAT

52. STEP(TO M60543)
123. (52A)STEP(P.T.O. HAND OPERATE SPEC.)(FROM M60544)
53. COVER(LEVER)
54. COVER(MONITOR)
55. SEAT MOUNT
56. SEAT MOUNT(COVER)
57. SEAT
58. SEAT(INNER PARTS)
59. HANDRAIL

BONNET

60. BONNET(REAR)
61. BONNET(FRONT)
62. BONNET(LEFT)
63. BONNET(RIGHT)

CANOPY

64. CANOPY
65. MOUNT

HYDRAULIC OIL EQUIPMENT

66. HYD.OIL PUMP MOUNT

# Contents




Fig. No. Fig. Name

67. HYD.OIL PUMP
68. BOOM CYLINDER(Y SPEC.)(TO M60688)
138. (68A)BOOM CYLINDER(K SPEC.)(FROM M60689)
69. ARM CYLINDER(Y SPEC.)(TO M60688)
139. (69A)ARM CYLINDER(K SPEC.)(FROM M60689)
70. BUCKET CYLINDER(Y SPEC.)(TO M60688)
140. (70A)BUCKET CYLINDER(K SPEC.)(FROM M60689)
71. SWING CYLINDER(Y SPEC.)(TO M60688)
141. (71A)SWING CYLINDER(K SPEC.)(FROM M60689)
72. BLADE CYLINDER(Y SPEC.)(TO M60688)
142. (72A)BLADE CYLINDER(K SPEC.)(FROM M60689)
73. TRAVEL MOTOR
74. TURNING MOTOR
75. SWIVEL JOINT(Y SPEC.)TO M60508
116. (75A)SWIVEL JOINT(N SPEC.)(FROM M60509)
76. CONTROL VALVE(1/7)(TO M60543)
77. CONTROL VALVE(2/7)(TO M60543)
78. CONTROL VALVE(3/7)(TO M60543)
79. CONTROL VALVE(4/7)(TO M60543)
80. CONTROL VALVE(5/7)(TO M60543)
81. CONTROL VALVE(6/7)(TO M60543)
82. CONTROL VALVE(7/7)(TO M60543)
124. (82A)CONTROL VALVE(1/7)(P.T.O. HAND OPERATE SPEC.)(FROM M60544)
125. (82B)CONTROL VALVE(2/7)(P.T.O. HAND OPERATE SPEC.)(FROM M60544)
126. (82C)CONTROL VALVE(3/7)(P.T.O. HAND OPERATE SPEC.)(FROM M60544)

Fig. No. Fig. Name

127. (82D)CONTROL VALVE(4/7)(P.T.O. HAND OPERATE SPEC.)(FROM M60544)
128. (82E)CONTROL VALVE(5/7)(P.T.O. HAND OPERATE SPEC.)(FROM M60544)
129. (82F)CONTROL VALVE(6/7)(P.T.O. HAND OPERATE SPEC.)(FROM M60544)
130. (82G)CONTROL VALVE(7/7)(P.T.O. HAND OPERATE SPEC.)(FROM M60544)
83. REMOTE CONTROL VALVE(TO M60543)
131. (83A)REMOTE CONTROL VALVE(RIGHT)(P.T.O. HAND OPERATE SPEC.)(FROM M60544)
132. (83B)REMOTE CONTROL VALVE(LEFT)(P.T.O. HAND OPERATE SPEC.)(FROM M60544)
84. HYD.OIL TANK
100. QUICK COUPLER(HITCH CYLINDER)
135. SOLENOID VALVE(P.T.O. HAND OPERATE SPEC.)(FROM M60544)

HYDRAULIC OIL PIPING

85. HYD. OIL PIPING(TANK - PUMP, CONTROL VALVE)
86. HYD.OIL PIPING(CONTROL VALVE - TURNING MOTOR)
87. HYD.OIL PIPING(CONTROL VALVE : FITTING, 1)
88. HYD.OIL PIPING(CONTROL VALVE : FITTING, 2)
89. HYD. OIL PIPING(CONTROL VALVE - RETURN, DRAIN)
90. HYD.OIL PIPING(CONTROL VALVE - BOOM BULKHEAD, SWING)
91. HYD.OIL PIPING(CONTROL VALVE - BOOM CYLINDER)
92. HYD.OIL PIPING(CONTROL VALVE - SWIVEL JOINT)
93. HYD.OIL PIPING(TRACK FRAME)
94. HYD.OIL PIPING(ARM CYLINDER, BUCKET CYLINDER)
95. HYD.OIL PIPING(P.T.O. : CONTROL VALVE - BOOM)
96. HYD.OIL PIPING(P.T.O. : BOOM - ARM END)
97. CONTROL PIPING(REMOTE CONTROL V. - CONTROL V.)(TO M60543)

# Contents




Fig. No. Fig. Name

133. (97A)CONTROL PIPING(REMOTE C/V- C/V)(P.T.O. HAND OPERATE SPEC.)(FROM M60544)

98. ACCUMULATOR

99. GREASING

101. QUICK COUPLER(HYD.OIL PIPING:1)

102. QUICK COUPLER(HYD.OIL PIPING:2)

136. P.T.O. : SOLENOID VALVE(HAND OPERATE SPEC.)(FROM M60544)

IMPLEMENT

103. QUICK COUPLER(BODY)

104. BOOM BRACKET

105. BOOM

106. ARM

107. BUCKET ARM & LINK

108. BLADE

OPTIONAL & KIT

109. REMOTE CONTROLLER KIT(OPTIONAL)

110. REARVIEW MIRROR KIT(OPTIONAL)

111. P.T.O. OVER LOAD VALVE KIT(OPTIONAL)

112. ADDITIONAL WEIGHT KIT(OPTIONAL)

113. FRONT LAMP KIT(OPTIONAL)

114. BUCKET LINK WITH HOOK(OPTIONAL)

115. TRAVEL ALARM KIT(OPTIONAL)

# Fig.1. LABEL(EXTERIOR)(TO M60543)



(A)=VIO30-6B P(KR) (D)=
(B)= (E)=
(C)= (F)=

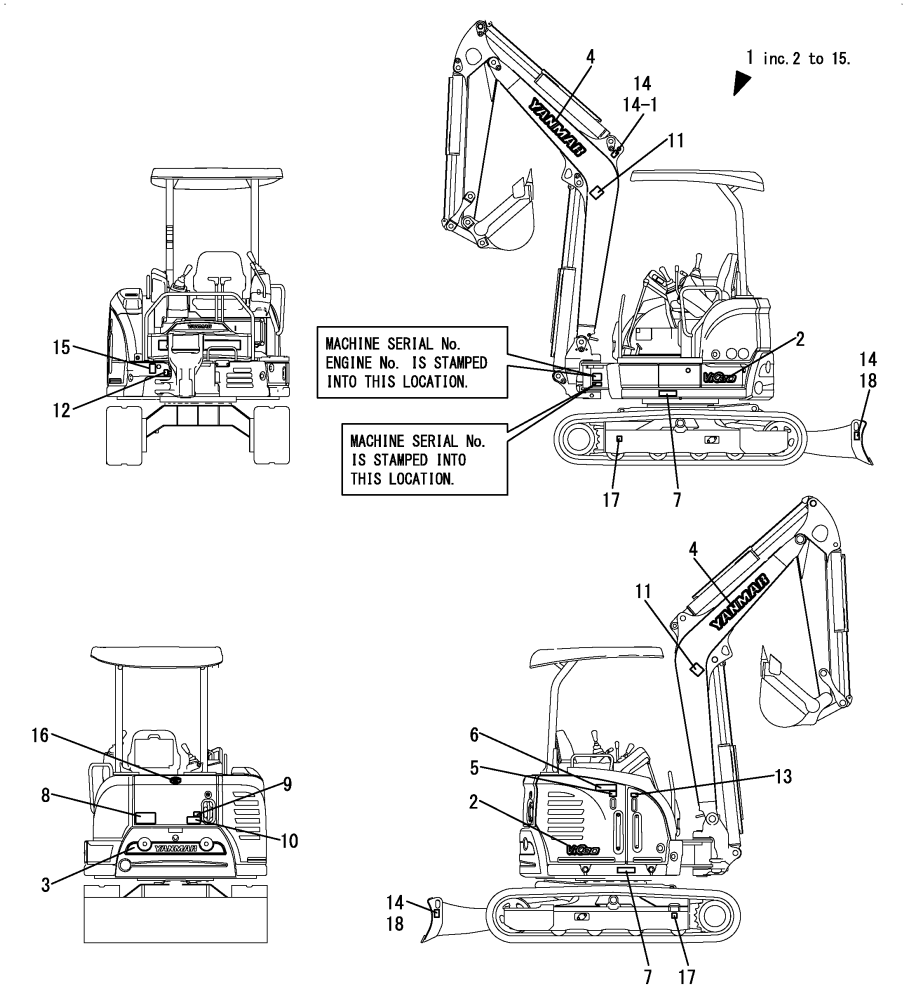


SAFETY LABEL

| No. | Lev. | Parts No. | Description | Q'ty (A) | (B) | (C) | (D) | (E) | (F) | I | R |
|---|---|---|---|---|---|---|---|---|---|---|---|
| 1 | 1 | 172B02-08120 | LABEL SET, EXT KR | 1 | | | | | | | |
| 1-1 | 1 | 172B02-08121 | LABEL SET,OUT KR | 1 | | | | | | N | |
| | (A=M62138) | | | | | | | | | | |
| 2 | 2 | 172B02-03150 | LABEL, MODEL L R | 2 | | | | | | | |
| 2-1 | 2 | 172B02-03151 | LABEL, MODEL L R | 2 | | | | | | S | 1 |
| | (A=M62138) | | | | | | | | | | |
| 3 | 2 | 172B03-03160 | LABEL, REAR | 1 | | | | | | | |
| 4 | 2 | 172A65-03230 | LABEL, YANMAR 627 | 2 | | | | | | | |
| 5 | 2 | 172463-03290 | LABEL, OILING US | 1 | | | | | | | |
| 6 | 2 | 172437-03322 | LABEL, RESERVOIR US | 1 | | | | | | | |
| 7 | 2 | 172437-03352 | LABEL, GREASE CYL US | 2 | | | | | | | |
| 8 | 2 | 172437-03381 | LABEL, SWING AREA | 1 | | | | | | | |
| 9 | 2 | 172437-03402 | LABEL, ENGINE COVER | 1 | | | | | | | |
| 10 | 2 | 172A36-03411 | LABEL, ENGINE ROOM | 1 | | | | | | | |
| 11 | 2 | 172437-03461 | LABEL, BOOM | 2 | | | | | | | |
| 12 | 2 | 172B03-03460 | LABEL, GREASE US | 1 | | | | | | | |
| 13 | 2 | 172437-03501 | LABEL, FUEL US | 1 | | | | | | | |
| 14 | 2 | 172437-03511 | LABEL, LIFTING | 3 | | | | | | | |
| 14-1 | 2 | 172437-03511 | LABEL, LIFTING | 1 | | | | | | K | |
| | (A=MBF409) | | | | | | | | | | |
| 15 | 2 | 172A46-03270 | LABEL, PTO SELECT | 1 | | | | | | | |
| 16 | 1 | 41800-210040 | EMBLEM, M 04 | 1 | | | | | | | |
| 17 | 1 | 172B03-03930 | LABEL,TIE-DOWN | 2 | | | | | | W | |
| | (A=MBF409) | | | | | | | | | | |
| 18 | 1 | 172B03-03940 | LABEL,LIFTING & TIE | 2 | | | | | | W | |
| | (A=MBF409) | | | | | | | | | | |

Remarks
(1)Interchangeable replacement by simultaneous with two.

N:Old $\overset{\text{Yes}}{\underset{\text{No}}{\rightleftarrows}}$ New, Q:Old $\overset{\text{No}}{\underset{\text{Yes}}{\rightleftarrows}}$ New, R:Old $\overset{\text{Yes}}{\underset{\text{Yes}}{\rightleftarrows}}$ New, S:Old $\overset{\text{No}}{\underset{\text{No}}{\rightleftarrows}}$ New, W:Add, Z:Discontinued, F:Interchangeable by set, K:Q'ty Change

Copyright (C) YANMAR GLOBAL CS CO., LTD. All RightsReserved.

# Fig.117. (1A)LABEL(EXTERIOR)(P.T.O. HAND OPERATE SPEC.)(FROM M60544)

(A)=VIO30-6B P(KR)
(B)=
(C)=
(D)=
(E)=
(F)=

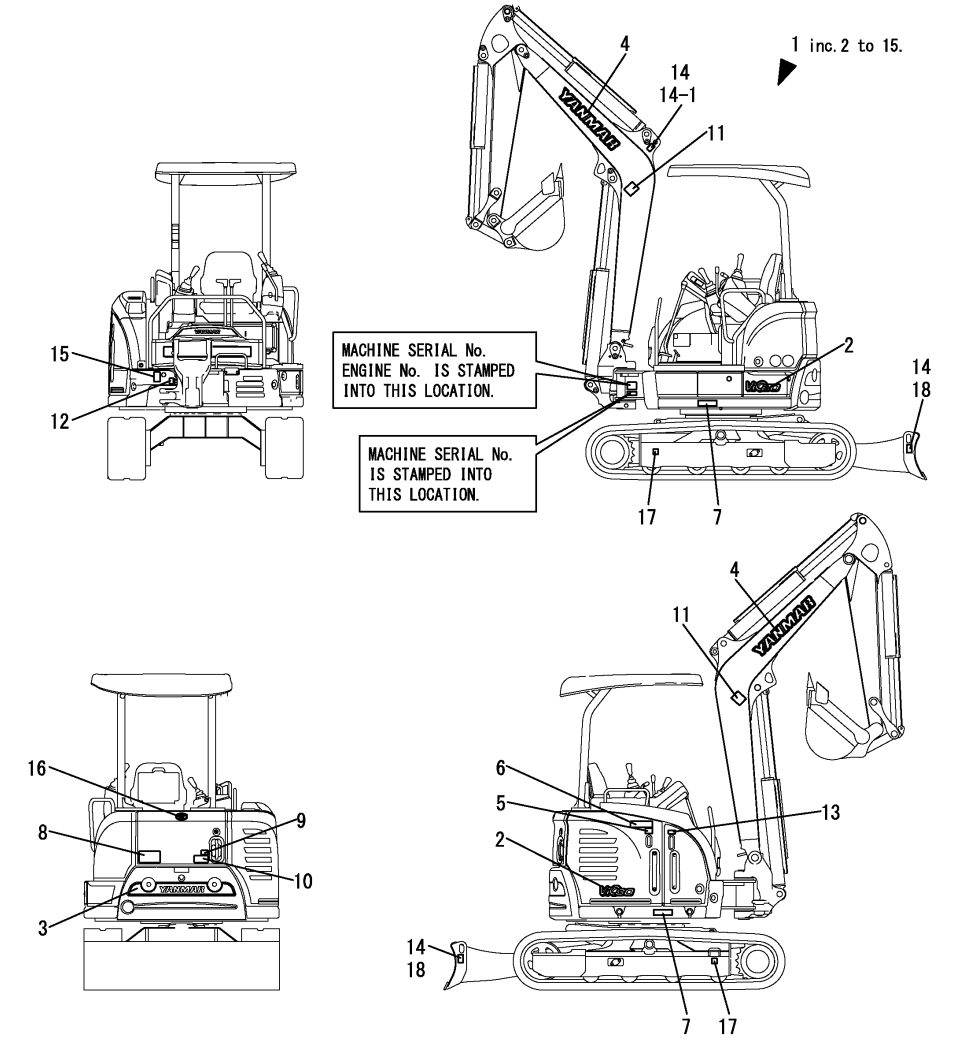








SAFETY LABEL

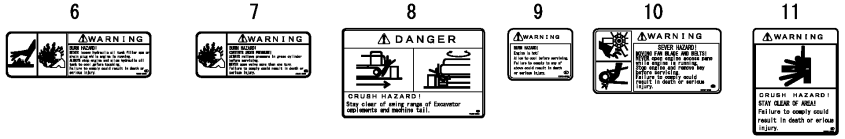


| No. | Lev. | Parts No. | Description | Q'ty (A) | (B) | (C) | (D) | (E) | (F) | I | R |
|---|---|---|---|---|---|---|---|---|---|---|---|
| 1 | 1 | 172B02-08140 | LABEL SET,OUT KR | 1 | | | | | | | |
| 2 | 2 | 172B02-03151 | LABEL, MODEL L R | 2 | | | | | | | |
| 3 | 2 | 172B03-03160 | LABEL, REAR | 1 | | | | | | | |
| 4 | 2 | 172A65-03230 | LABEL, YANMAR 627 | 2 | | | | | | | |
| 5 | 2 | 172463-03290 | LABEL, OILING US | 1 | | | | | | | |
| 6 | 2 | 172437-03322 | LABEL, RESERVOIR US | 1 | | | | | | | |
| 7 | 2 | 172437-03352 | LABEL, GREASE CYL US | 2 | | | | | | | |
| 8 | 2 | 172437-03381 | LABEL, SWING AREA | 1 | | | | | | | |
| 8-1 | 2 | 172A64-03380 | LABEL, SWING AREA US | 1 | | | | | | N | |
| | (A=MBF129) | | | | | | | | | | |
| 9 | 2 | 172437-03402 | LABEL, ENGINE COVER | 1 | | | | | | | |
| 10 | 2 | 172A36-03411 | LABEL, ENGINE ROOM | 1 | | | | | | | |
| 11 | 2 | 172437-03461 | LABEL, BOOM | 2 | | | | | | | |
| 12 | 2 | 172B03-03460 | LABEL, GREASE US | 1 | | | | | | | |
| 13 | 2 | 172437-03501 | LABEL, FUEL US | 1 | | | | | | | |
| 14 | 2 | 172437-03511 | LABEL, LIFTING | 3 | | | | | | | |
| 14-1 | 2 | 172437-03511 | LABEL, LIFTING | 1 | | | | | | K | |
| | (A=MBF409) | | | | | | | | | | |
| 15 | 2 | 172A79-03160 | LABEL, PTO SELECT | 1 | | | | | | | |
| 16 | 1 | 41800-210040 | EMBLEM, M 04 | 1 | | | | | | | |
| 17 | 1 | 172B03-03930 | LABEL,TIE-DOWN | 2 | | | | | | W | |
| | (A=MBF409) | | | | | | | | | | |
| 18 | 1 | 172B03-03940 | LABEL,LIFTING & TIE | 2 | | | | | | W | |
| | (A=MBF409) | | | | | | | | | | |

N:Old $\overset{\text{Yes}}{\underset{\text{No}}{\leftrightarrows}}$ New, Q:Old $\overset{\text{No}}{\underset{\text{Yes}}{\leftrightarrows}}$ New, R:Old $\overset{\text{Yes}}{\underset{\text{Yes}}{\leftrightarrows}}$ New, S:Old $\overset{\text{No}}{\underset{\text{No}}{\leftrightarrows}}$ New, W:Add, Z:Discontinued, F:Interchangeable by set, K:Q'ty Change

Copyright (C) YANMAR GLOBAL CS CO., LTD. All RightsReserved.

# Fig.2. LABEL(BONNET INSIDE)



(A)=VIO30-6B P(KR)
(B)=
(C)=
(D)=
(E)=
(F)=

| No. | Lev. | Parts No. | Description | Q'ty (A) | (B) | (C) | (D) | (E) | (F) | I | R |
|---|---|---|---|---|---|---|---|---|---|---|---|
| 1 | 1 | 172B03-08160 | LABEL SET, IN EX | 1 | | | | | | | |
| 2 | 2 | 172A07-03160 | LABEL, WATER DRAIN | 1 | | | | | | | |
| 3 | 2 | 172A38-03201 | LABEL, SUB TANK | 1 | | | | | | | |
| 4 | 2 | 172A38-03211 | LABEL, ANTI-FREEZING | 1 | | | | | | | |
| 5 | 2 | 172B03-03260 | LABEL, FUSE | 1 | | | | | | | |
| 6 | 2 | 172462-03320 | LABEL, RADIATOR | 1 | | | | | | | |
| 7 | 2 | 172437-03361 | LABEL, BATTERY | 1 | | | | | | | |
| 8 | 2 | 172B03-03390 | LABEL, SILENCER EX | 1 | | | | | | | |
| 9 | 2 | 172125-03951 | LABEL, AIR CLEANER | 1 | | | | | | | |

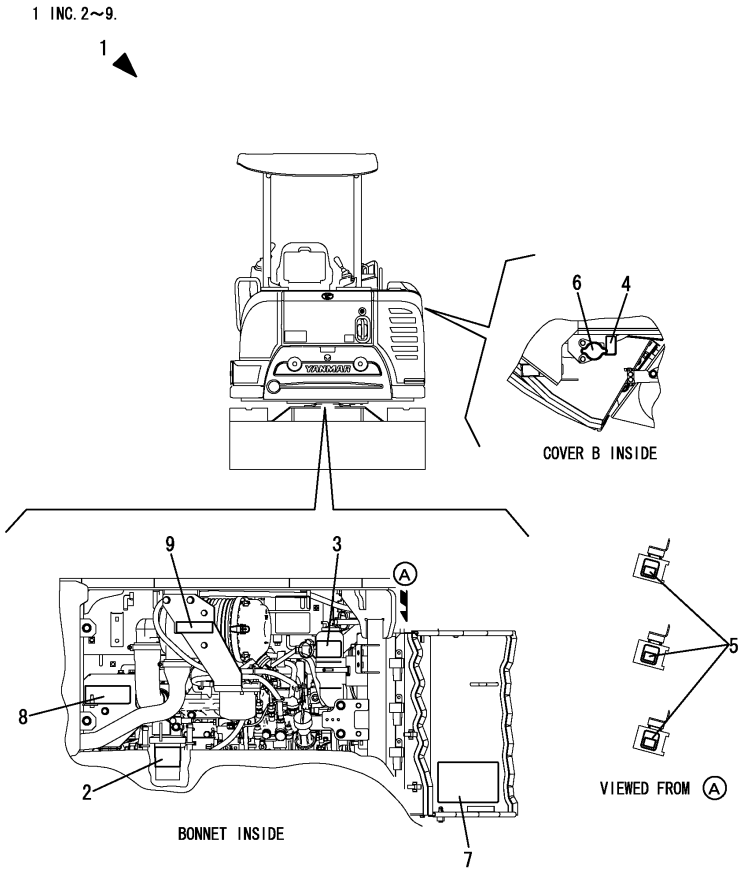


SAFETY LABEL

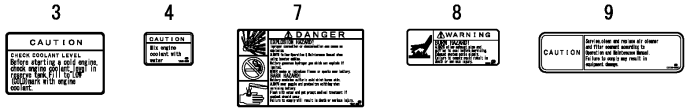


N:Old $\overset{\text{Yes}}{\underset{\text{No}}{\rightleftarrows}}$ New, Q:Old $\overset{\text{No}}{\underset{\text{Yes}}{\rightleftarrows}}$ New, R:Old $\overset{\text{Yes}}{\underset{\text{Yes}}{\rightleftarrows}}$ New, S:Old $\overset{\text{No}}{\underset{\text{No}}{\rightleftarrows}}$ New, W:Add, Z:Discontinued, F:Interchangeable by set, K:Q'ty Change

Copyright (C) YANMAR GLOBAL CS CO., LTD. All RightsReserved.

# Fig.3. LABEL(CANOPY)(TO M60543)



(A)=VIO30-6B P(KR) (D)=
(B)= (E)=
(C)= (F)=

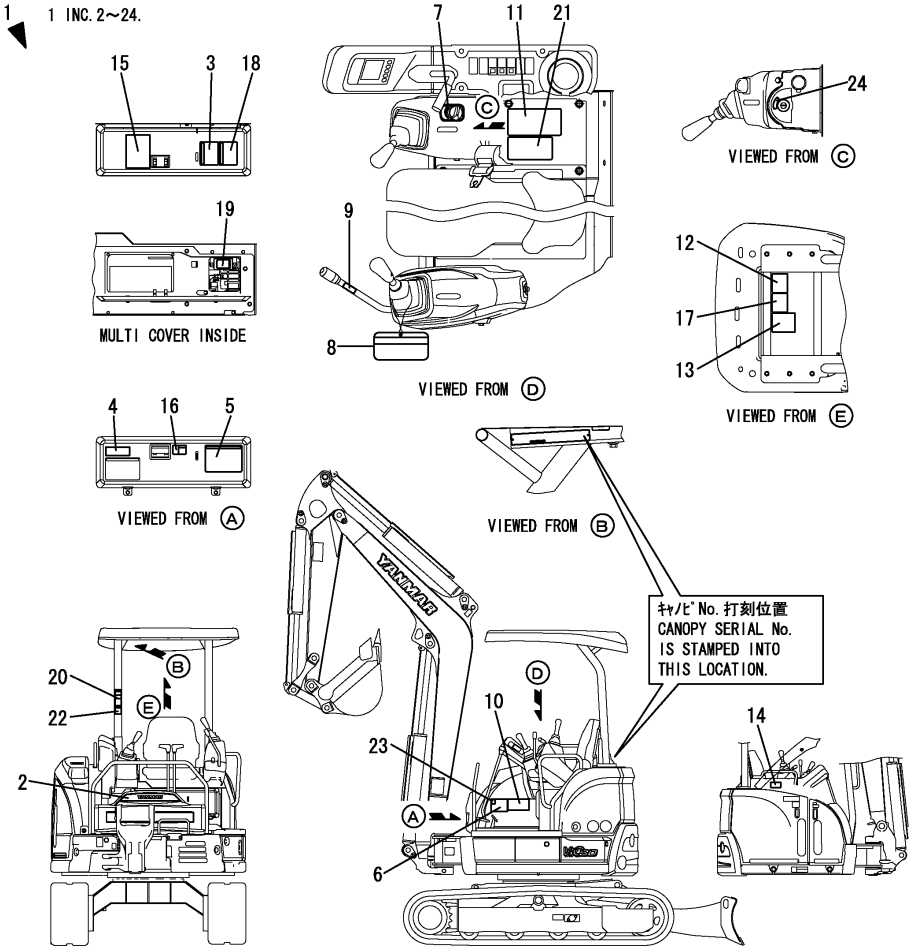


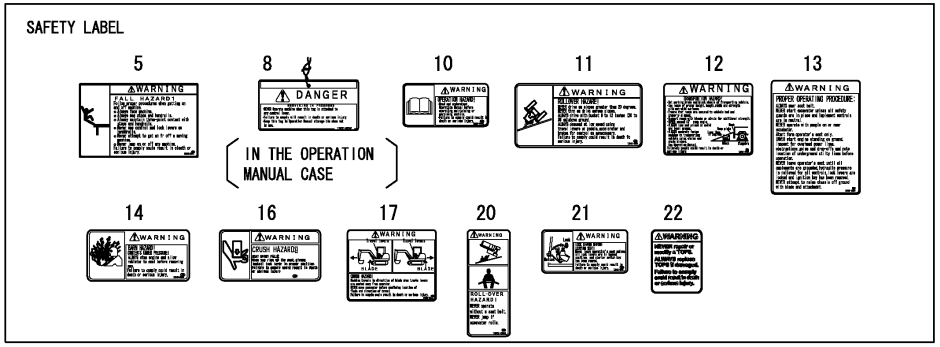


| No. | Lev. | Parts No. | Description | Q'ty (A) | (B) | (C) | (D) | (E) | (F) | I | R |
|---|---|---|---|---|---|---|---|---|---|---|---|
| 1 | 1 | 172B02-08220 | LABEL SET, 2P KR | 1 | | | | | | | |
| 2 | 2 | 172B03-03140 | LABEL, FRONT TOPS | 1 | | | | | | | |
| 3 | 2 | 172437-03242 | LABEL,ADJUST CRAWLER | 1 | | | | | | | |
| 4 | 2 | 172B02-03130 | LABEL, SPEC KR | 1 | | | | | | | |
| 5 | 2 | 172472-03141 | LABEL, SUPPORT | 1 | | | | | | | |
| 6 | 2 | 172490-03200 | LABEL, OPERATION | 1 | | | | | | | |
| 7 | 2 | 172A69-03220 | LABEL, ACCELERATOR | 1 | | | | | | | |
| 8 | 2 | 172437-03252 | TAG ASSY, CAUTION | 1 | | | | | | | |
| 9 | 2 | 172183-03280 | LABEL, LOCK | 1 | | | | | | | |
| 10 | 2 | 172437-03302 | LABEL, MANUAL | 1 | | | | | | | |
| 11 | 2 | 172437-03312 | LABEL, SLOPE | 1 | | | | | | | |
| 12 | 2 | 172437-03343 | LABEL, TRANSPORT | 1 | | | | | | | |
| 13 | 2 | 172437-03372 | LABEL, NEUTRAL | 1 | | | | | | | |
| 14 | 2 | 172437-03391 | LABEL, RADIATOR | 1 | | | | | | | |
| 15 | 2 | 172B03-03400 | LABEL,OIL/WATER EX | 1 | | | | | | | |
| 16 | 2 | 172B03-03410 | LABEL, SEAT TILT UP | 1 | | | | | | | |
| 17 | 2 | 172437-03432 | LABEL, STEERING | 1 | | | | | | | |
| 18 | 2 | 172B03-03430 | LABEL, GREASING US | 1 | | | | | | | |
| 19 | 2 | 172B03-03440 | LABEL, FUSE BOX US | 1 | | | | | | | |
| 20 | 2 | 172437-03451 | LABEL, SEAT BELT | 1 | | | | | | | |
| 21 | 2 | 172437-03471 | LABEL, LEVER LOCK US | 1 | | | | | | | |
| 22 | 2 | 172499-03270 | LABEL, TOPS | 1 | | | | | | | |
| 23 | 2 | 172A46-03220 | LABEL, PTO | 1 | | | | | | | |
| 24 | 2 | 172B03-03220 | LABEL, KEY SWITCH | 1 | | | | | | | |

N:Old $\overset{\text{Yes}}{\underset{\text{No}}{\rightleftarrows}}$ New, Q:Old $\overset{\text{No}}{\underset{\text{Yes}}{\rightleftarrows}}$ New, R:Old $\overset{\text{Yes}}{\underset{\text{Yes}}{\rightleftarrows}}$ New, S:Old $\overset{\text{No}}{\underset{\text{No}}{\rightleftarrows}}$ New, W:Add, Z:Discontinued, F:Interchangeable by set, K:Q'ty Change

Copyright (C) YANMAR GLOBAL CS CO., LTD. All RightsReserved.

# Fig.118. (3A)LABEL(CANOPY)(P.T.O. HAND OPERATE SPEC.)(FROM M60544)

(A)=VIO30-6B P(KR)
(B)=
(C)=
(D)=
(E)=
(F)=

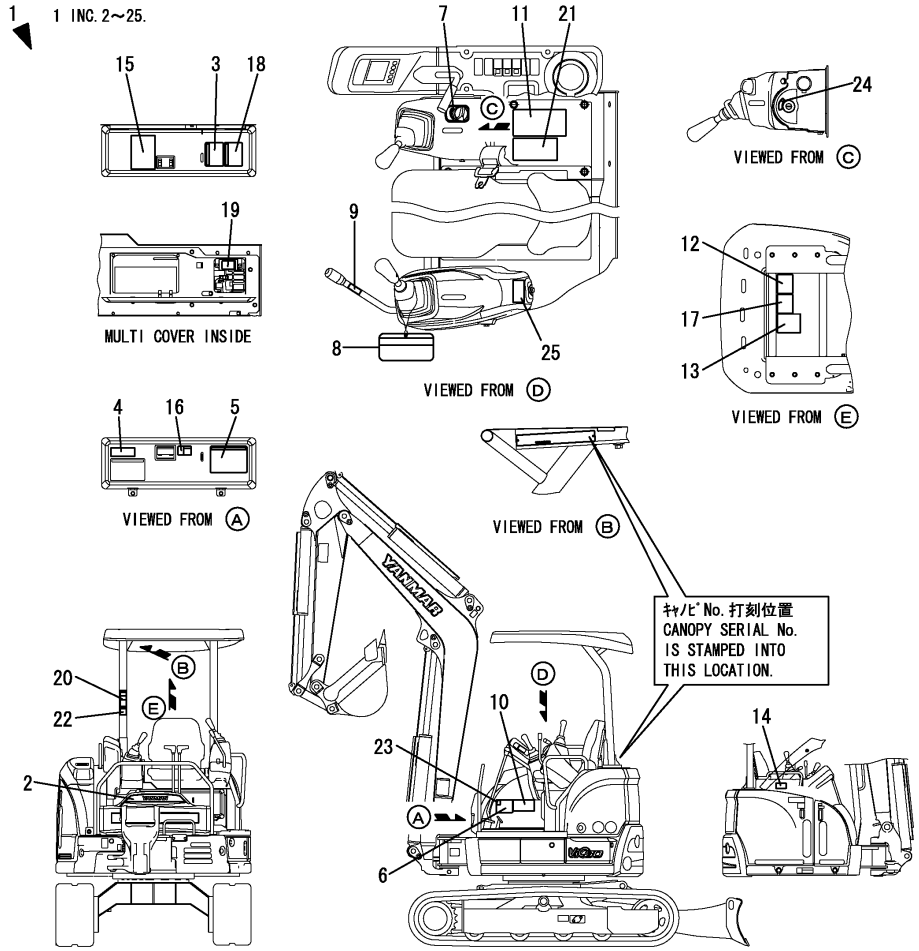


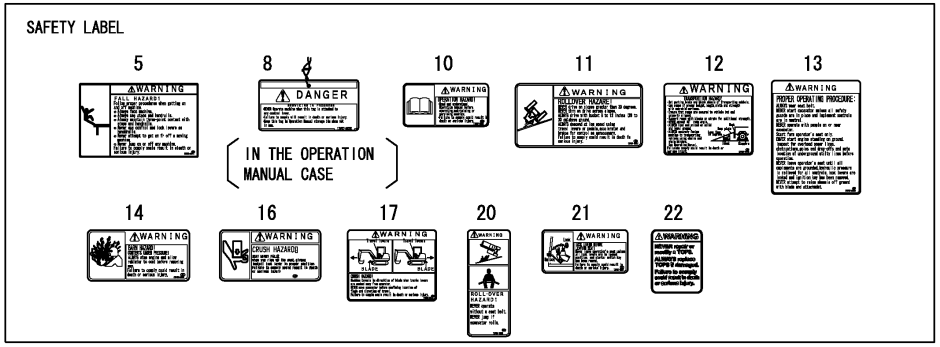


| No. | Lev. | Parts No. | Description | Q'ty (A) | (B) | (C) | (D) | (E) | (F) | I | R |
|---|---|---|---|---|---|---|---|---|---|---|---|
| 1 | 1 | 172B02-08440 | LABEL SET,2P KR | 1 | | | | | | | |
| 2 | 2 | 172B03-03140 | LABEL, FRONT TOPS | 1 | | | | | | | |
| 3 | 2 | 172437-03242 | LABEL,ADJUST CRAWLER | 1 | | | | | | | |
| 4 | 2 | 172B02-03130 | LABEL, SPEC KR | 1 | | | | | | | |
| 5 | 2 | 172472-03141 | LABEL, SUPPORT | 1 | | | | | | | |
| 6 | 2 | 172B03-03200 | LABEL, OPERATION | 1 | | | | | | | |
| 7 | 2 | 172A69-03220 | LABEL, ACCELERATOR | 1 | | | | | | | |
| 8 | 2 | 172437-03252 | TAG ASSY, CAUTION | 1 | | | | | | | |
| 9 | 2 | 172183-03280 | LABEL, LOCK | 1 | | | | | | | |
| 10 | 2 | 172437-03302 | LABEL, MANUAL | 1 | | | | | | | |
| 11 | 2 | 172437-03312 | LABEL, SLOPE | 1 | | | | | | | |
| 12 | 2 | 172437-03343 | LABEL, TRANSPORT | 1 | | | | | | | |
| 13 | 2 | 172437-03372 | LABEL, NEUTRAL | 1 | | | | | | | |
| 14 | 2 | 172437-03391 | LABEL, RADIATOR | 1 | | | | | | | |
| 15 | 2 | 172B03-03400 | LABEL,OIL/WATER EX | 1 | | | | | | | |
| 16 | 2 | 172B03-03410 | LABEL, SEAT TILT UP | 1 | | | | | | | |
| 17 | 2 | 172437-03432 | LABEL, STEERING | 1 | | | | | | | |
| 18 | 2 | 172B03-03430 | LABEL, GREASING US | 1 | | | | | | | |
| 19 | 2 | 172B03-03440 | LABEL, FUSE BOX US | 1 | | | | | | | |
| 20 | 2 | 172437-03451 | LABEL, SEAT BELT | 1 | | | | | | | |
| 21 | 2 | 172437-03471 | LABEL, LEVER LOCK US | 1 | | | | | | | |
| 22 | 2 | 172499-03270 | LABEL, TOPS | 1 | | | | | | | |
| 23 | 2 | 172A79-03150 | LABEL, PTO SWITCH | 1 | | | | | | | |
| 24 | 2 | 172B03-03220 | LABEL, KEY SWITCH | 1 | | | | | | | |
| 25 | 2 | 172A47-03371 | LABEL, PTO EX | 1 | | | | | | | |

N:Old $\overset{\text{Yes}}{\underset{\text{No}}{\rightleftarrows}}$ New, Q:Old $\overset{\text{No}}{\underset{\text{Yes}}{\rightleftarrows}}$ New, R:Old $\overset{\text{Yes}}{\underset{\text{Yes}}{\rightleftarrows}}$ New, S:Old $\overset{\text{No}}{\underset{\text{No}}{\rightleftarrows}}$ New, W:Add, Z:Discontinued, F:Interchangeable by set, K:Q'ty Change

Copyright (C) YANMAR GLOBAL CS CO., LTD. All RightsReserved.

# Fig.4. LABEL(QUICK COUPLER)



(A)=VIO30-6B P(KR)
(B)=
(C)=
(D)=
(E)=
(F)=

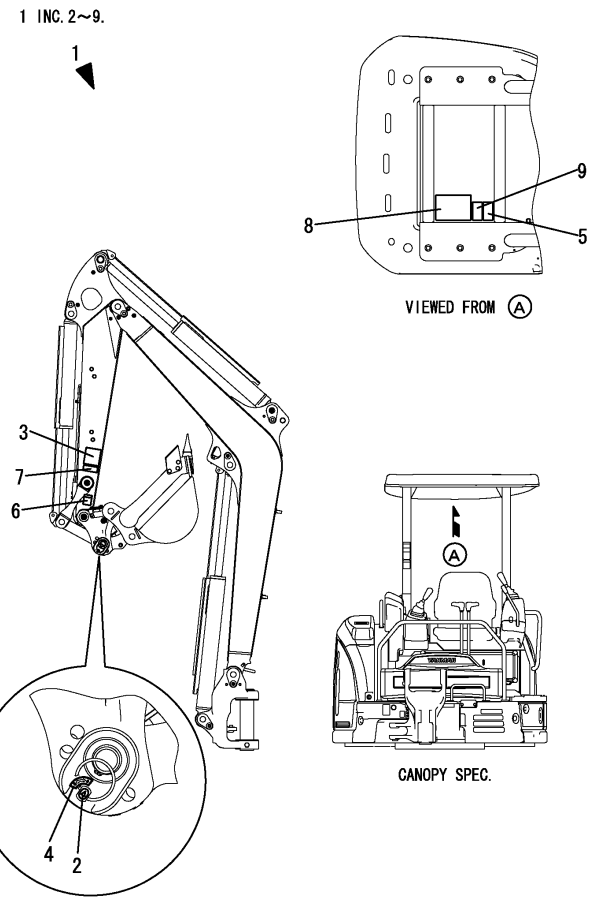


| No. | Lev. | Parts No. | Description | Q'ty (A) | (B) | (C) | (D) | (E) | (F) | I | R |
|---|---|---|---|---|---|---|---|---|---|---|---|
| 1 | 1 | 172B03-08200 | LABEL SET, QUICK EX | 1 | | | | | | | |
| 2 | 2 | 172958-03160 | LABEL | 1 | | | | | | | |
| 3 | 2 | 172472-03230 | LABEL, OPERATION | 1 | | | | | | | |
| 4 | 2 | 172458-03240 | LABEL, LOCK | 1 | | | | | | | |
| 5 | 2 | 172472-03241 | LABEL, PIN US | 1 | | | | | | | |
| 6 | 2 | 172472-03261 | LABEL, FINGER | 1 | | | | | | | |
| 7 | 2 | 172472-03330 | LABEL, LOCK PIN | 1 | | | | | | | |
| 8 | 2 | 172B03-04400 | LABEL, WARNING HITCH | 1 | | | | | | | |
| 9 | 2 | 172B03-04410 | LABEL, SAND US | 1 | | | | | | | |

SAFETY LABEL

5

6

7

8

9

N:Old $\overset{\text{Yes}}{\underset{\text{No}}{\rightleftarrows}}$ New, Q:Old $\overset{\text{No}}{\underset{\text{Yes}}{\rightleftarrows}}$ New, R:Old $\overset{\text{Yes}}{\underset{\text{Yes}}{\rightleftarrows}}$ New, S:Old $\overset{\text{No}}{\underset{\text{No}}{\rightleftarrows}}$ New, W:Add, Z:Discontinued, F:Interchangeable by set, K:Q'ty Change

Copyright (C) YANMAR GLOBAL CS CO., LTD. All RightsReserved.

# Fig.5. TOOL CASE(METAL)



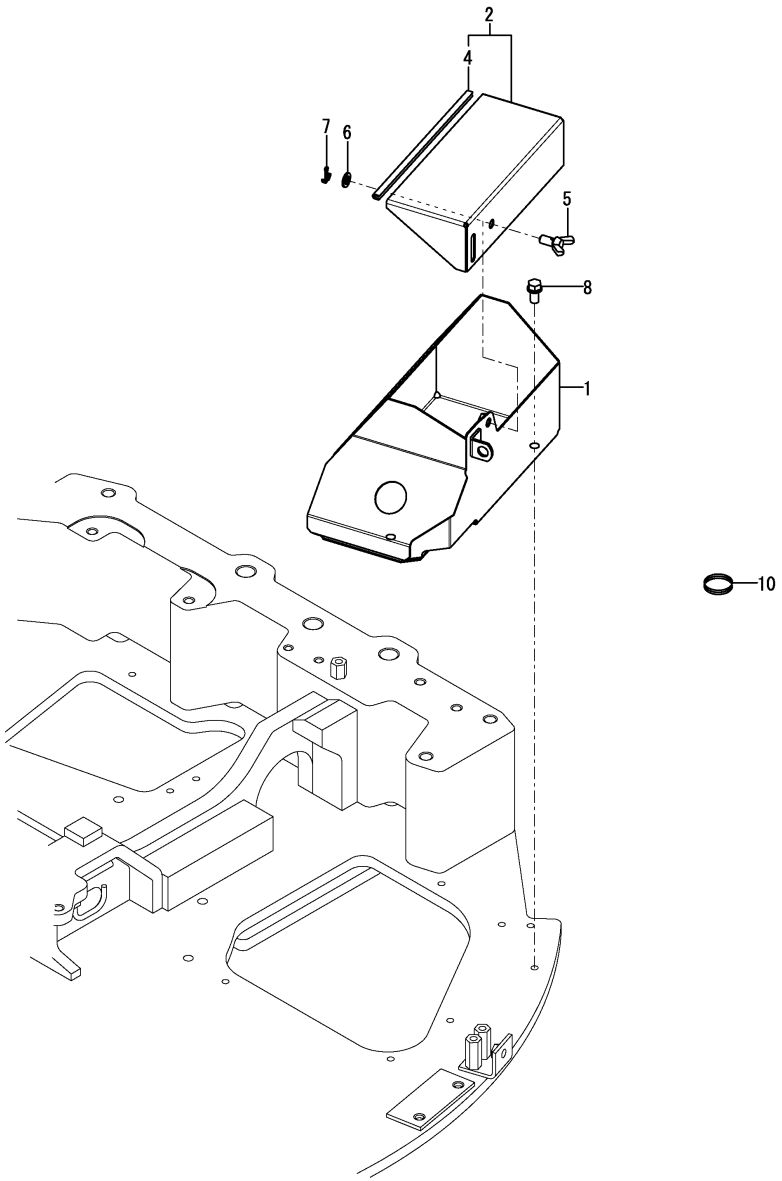


(A)=VIO30-6B P(KR)
(B)=
(C)=
(D)=
(E)=
(F)=

| No. | Lev. | Parts No. | Description | Q'ty (A) | (B) | (C) | (D) | (E) | (F) | I | R |
|---|---|---|---|---|---|---|---|---|---|---|---|
| 1 | 1 | 172B03-05310 | TOOLBOX ASSY | 1 | | | | | | | |
| 2 | 1 | 172B03-05360 | PLATE ASSY, BOX UP | 1 | | | | | | | |
| 4 | 2 | 172434-61200 | TRIM, 245 | 1 | | | | | | | |
| 5 | 1 | 172142-62301 | WING BOLT, M10X20 | 1 | | | | | | | |
| 6 | 1 | 22117-100000 | WASHER, 10 | 1 | | | | | | | |
| 7 | 1 | 22417-250200 | PIN, COTTER 2.5X20 | 1 | | | | | | | |
| 8 | 1 | 26013-100202 | BOLT, M10X 20 | 2 | | | | | | | |
| 10 | 1 | 1C7100-99650 | RING | 1 | | | | | | | |

Remarks
* No.1, 2, 4, 5, 6, 7, 8 & 9 is interchangeable with a set of Fig.146 No.1, 2, 3, 4 & 5.

N:Old $\overset{\text{Yes}}{\underset{\text{No}}{\leftrightarrows}}$ New, Q:Old $\overset{\text{No}}{\underset{\text{Yes}}{\leftrightarrows}}$ New, R:Old $\overset{\text{Yes}}{\underset{\text{Yes}}{\leftrightarrows}}$ New, S:Old $\overset{\text{No}}{\underset{\text{No}}{\leftrightarrows}}$ New, W:Add, Z:Discontinued, F:Interchangeable by set, K:Q'ty Change

Copyright (C) YANMAR GLOBAL CS CO., LTD. All RightsReserved.

# Fig.146. (5A)TOOL CASE(RESIN)



(A)=VIO30-6B P(KR)
(B)=
(C)=
(D)=
(E)=
(F)=

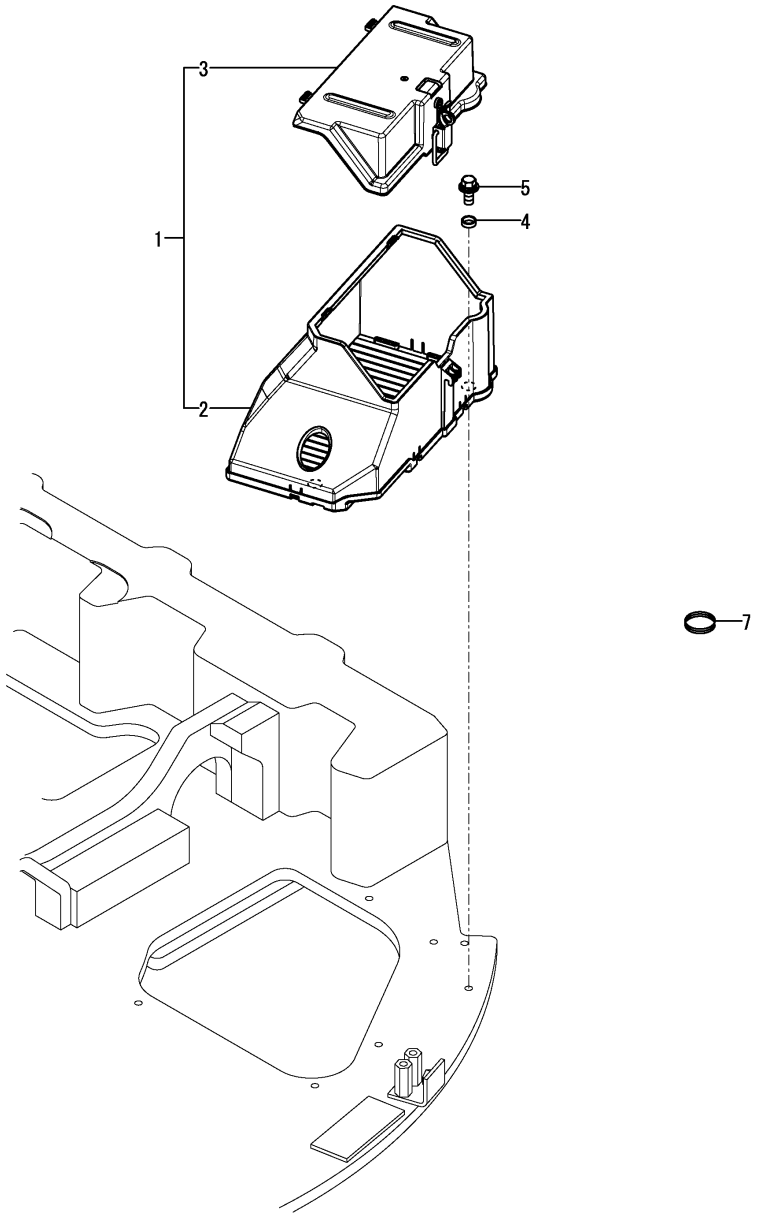


| No. | Lev. | Parts No. | Description | Q'ty (A) | (B) | (C) | (D) | (E) | (F) | I | R |
|---|---|---|---|---|---|---|---|---|---|---|---|
| 1 | 1 | 172B03-05400 | TOOLBOX ASSY | 1 | | | | | | | |
| 2 | 2 | 172B03-05500 | TOOLBOX ASSY,FRAME | 1 | | | | | | | |
| 3 | 2 | 172B03-05600 | TOOLBOX ASSY,COVER | 1 | | | | | | | |
| 4 | 1 | 172A47-65550 | COLLAR, 13X16X5 | 2 | | | | | | | |
| 5 | 1 | 26014-100252 | BOLT, M10X 25 | 2 | | | | | | | |
| 7 | 1 | 1C7100-99650 | RING | 1 | | | | | | | |

N:Old $\overset{\text{Yes}}{\underset{\text{No}}{\leftrightarrows}}$ New, Q:Old $\overset{\text{No}}{\underset{\text{Yes}}{\leftrightarrows}}$ New, R:Old $\overset{\text{Yes}}{\underset{\text{Yes}}{\leftrightarrows}}$ New, S:Old $\overset{\text{No}}{\underset{\text{No}}{\leftrightarrows}}$ New, W:Add, Z:Discontinued, F:Interchangeable by set, K:Q'ty Change

Copyright (C) YANMAR GLOBAL CS CO., LTD. All RightsReserved.

# Fig.6. MUFFLER



(A)=VIO30-6B P(KR)
(B)=
(C)=
(D)=
(E)=
(F)=

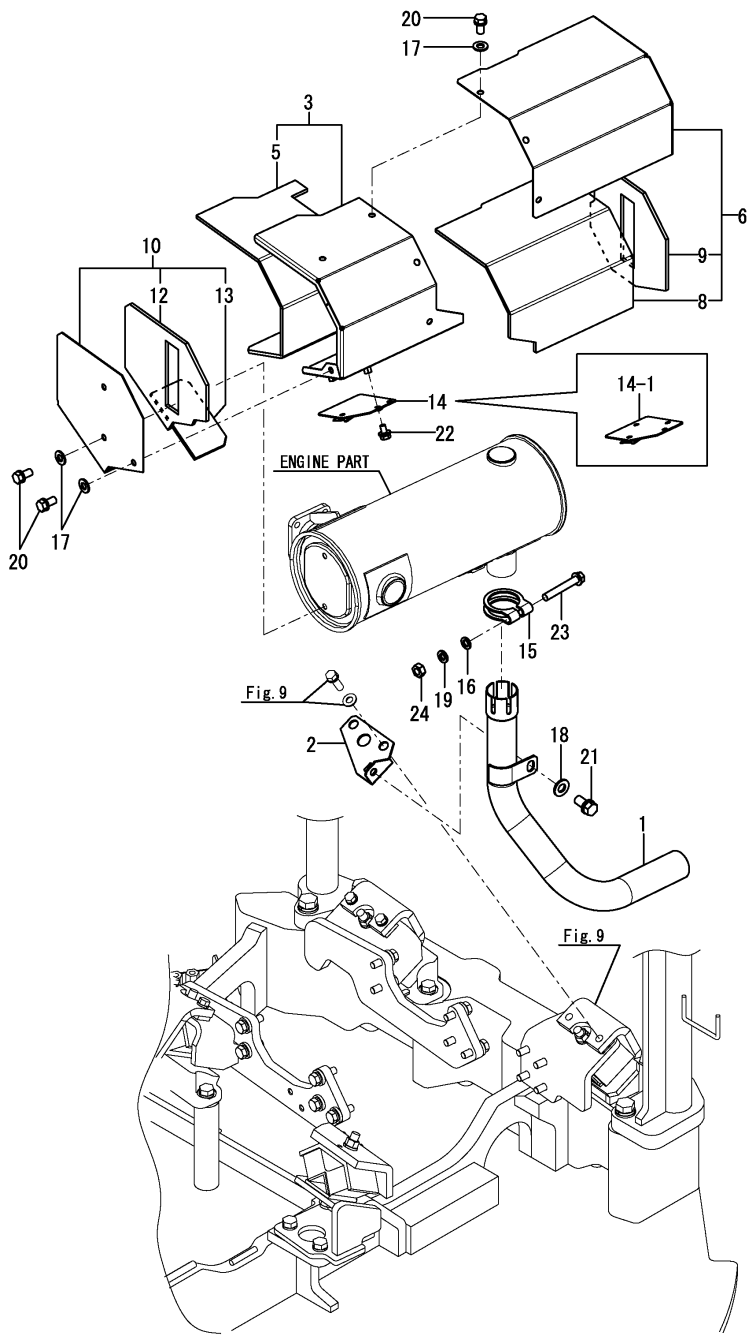


| No. | Lev. | Parts No. | Description | Q'ty (A) | (B) | (C) | (D) | (E) | (F) | I | R |
|---|---|---|---|---|---|---|---|---|---|---|---|
| 1 | 1 | 172B03-11350 | PIPE ASSY, EXHAUST | 1 | | | | | | | |
| 2 | 1 | 172B03-11380 | BRACKET ASSY,EXHAUST | 1 | | | | | | | |
| 3 | 1 | 172B03-11600 | COVER ASSY,MUFFLER A | 1 | | | | | | | |
| 5 | 2 | 172B03-11640 | SHEET, INSULATION A | 1 | | | | | | | |
| 6 | 1 | 172B03-11650 | COVER ASSY,MUFFLER B | 1 | | | | | | | |
| 8 | 2 | 172B03-11680 | SHEET, INSULATION B | 1 | | | | | | | |
| 9 | 2 | 172B03-11690 | SHEET, INSULATION C | 1 | | | | | | | |
| 10 | 1 | 172B03-11700 | COVER ASSY,MUFFLER C | 1 | | | | | | | |
| 12 | 2 | 172B03-11730 | SHEET, INSULATION D | 1 | | | | | | | |
| 13 | 2 | 172B03-11740 | SHEET, INSULATION E | 1 | | | | | | | |
| 14 | 1 | 172B03-11850 | PLATE ASSY,CONNECTOR | 1 | | | | | | | |
| 14-1 | 1 | 172B03-11851 | PLATE ASSY,CONNECTOR | 1 | | | | | | S | |
| | (A=MZZZZZ) | | | | | | | | | | |
| 15 | 1 | 121120-13580 | CLAMP | 1 | | | | | | | |
| 16 | 1 | 22117-100000 | WASHER, 10 | 1 | | | | | | | |
| 17 | 1 | 22137-080000 | WASHER, 8 | 8 | | | | | | | |
| 18 | 1 | 22137-100000 | WASHER, 10 | 1 | | | | | | | |
| 19 | 1 | 22217-100000 | WASHER, SPRING 10 | 1 | | | | | | | |
| 20 | 1 | 26013-080162 | BOLT, M8X 16 | 8 | | | | | | | |
| 21 | 1 | 26013-100202 | BOLT, M10X 20 | 1 | | | | | | | |
| 22 | 1 | 26014-060122 | BOLT, M6X 12 | 2 | | | | | | | |
| 23 | 1 | 26106-100652 | BOLT, M10X 65 PLATED | 1 | | | | | | | |
| 24 | 1 | 26706-100002 | NUT, M10 | 1 | | | | | | | |

N:Old $\overset{\text{Yes}}{\underset{\text{No}}{\leftrightarrows}}$ New, Q:Old $\overset{\text{No}}{\underset{\text{Yes}}{\leftrightarrows}}$ New, R:Old $\overset{\text{Yes}}{\underset{\text{Yes}}{\leftrightarrows}}$ New, S:Old $\overset{\text{No}}{\underset{\text{No}}{\leftrightarrows}}$ New, W:Add, Z:Discontinued, F:Interchangeable by set, K:Q'ty Change

Copyright (C) YANMAR GLOBAL CS CO., LTD. All RightsReserved.

# Fig.7. AIR CLEANER



(A)=VIO30-6B P(KR)
(B)=
(C)=
(D)=
(E)=
(F)=

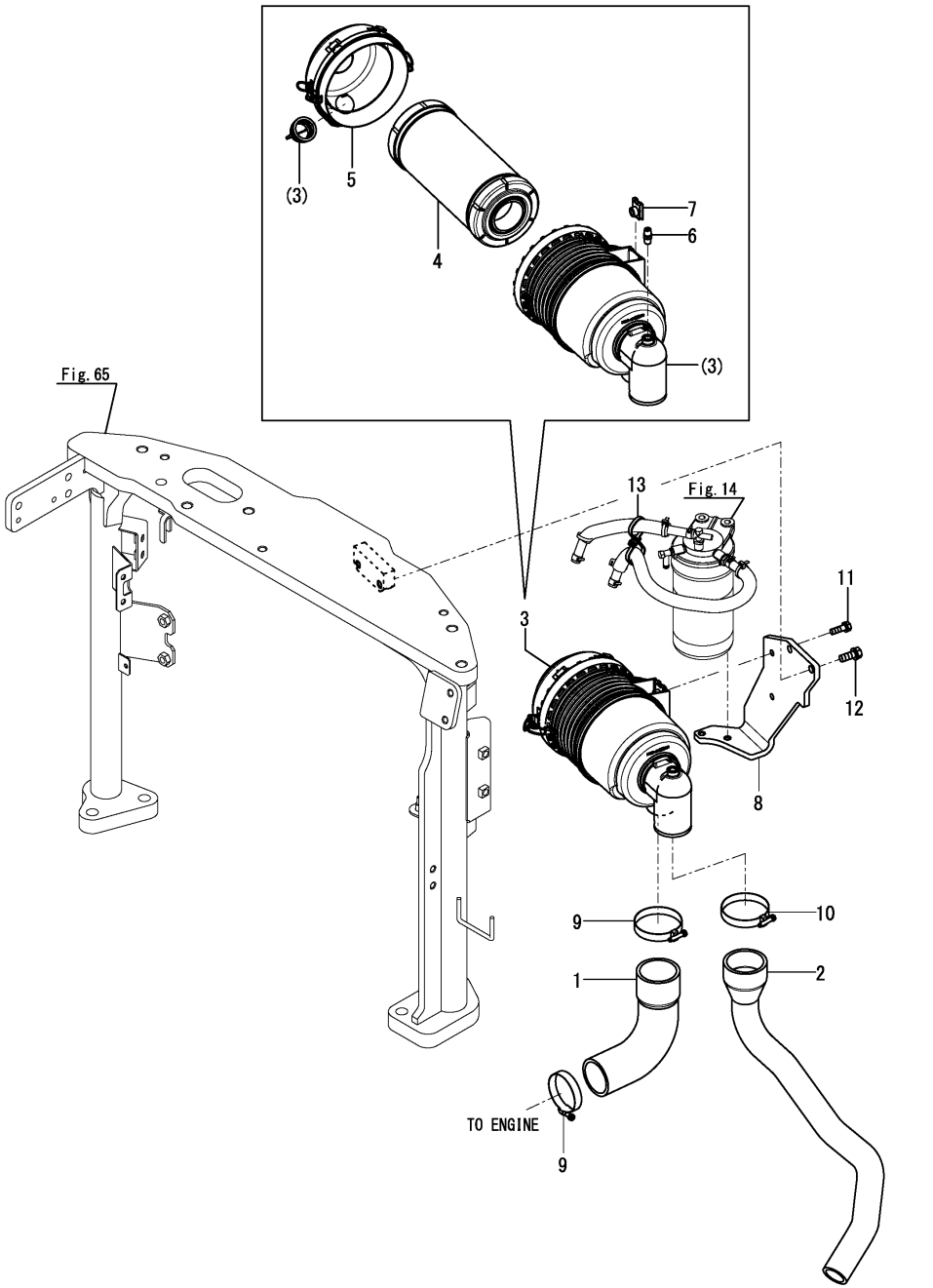


| No. | Lev. | Parts No. | Description | Q'ty (A) | (B) | (C) | (D) | (E) | (F) | I | R |
|---|---|---|---|---|---|---|---|---|---|---|---|
| 1 | 1 | 172B03-11510 | HOSE, AIR CLEANER A | 1 | | | | | | | |
| 2 | 1 | 172B03-11520 | HOSE, AIR CLEANER B | 1 | | | | | | | |
| 3 | 1 | 172B03-11530 | CLEANER ASSY, AIR | 1 | | | | | | | |
| 4 | 2 | 172B03-11540 | ELEMENT, 5.5INCH | 1 | | | | | | | |
| 5 | 2 | 172B03-11550 | COVER ASSY | 1 | | | | | | | |
| 6 | 2 | 172B03-11560 | PLUG | 1 | | | | | | | |
| 7 | 2 | 172B03-11570 | NUT | 2 | | | | | | | |
| 8 | 1 | 172B03-13170 | BRACKET, AIR CLEANER | 1 | | | | | | | |
| 9 | 1 | 23000-070000 | CLAMP, 70 | 2 | | | | | | | |
| 10 | 1 | 23000-070000 | CLAMP, 70 | 1 | | | | | | | |
| 11 | 1 | 26013-100252 | BOLT, M10X 25 | 2 | | | | | | | |
| 11-1 | 1 | 26014-080252 | BOLT, M8X 25 | 2 | | | | | | N | |
| | (A=M60501) | | | | | | | | | | |
| 12 | 1 | 26014-080252 | BOLT, M8X 25 | 2 | | | | | | | |
| 13 | 1 | 172137-16560 | BAND, BINDING W | 1 | | | | | | W | |
| | (A=MBF241) | | | | | | | | | | |

N:Old $\overset{\text{Yes}}{\underset{\text{No}}{\rightleftarrows}}$ New, Q:Old $\overset{\text{No}}{\underset{\text{Yes}}{\rightleftarrows}}$ New, R:Old $\overset{\text{Yes}}{\underset{\text{Yes}}{\rightleftarrows}}$ New, S:Old $\overset{\text{No}}{\underset{\text{No}}{\rightleftarrows}}$ New, W:Add, Z:Discontinued, F:Interchangeable by set, K:Q'ty Change

Copyright (C) YANMAR GLOBAL CS CO., LTD. All RightsReserved.

# Fig.8. ACCELERATOR

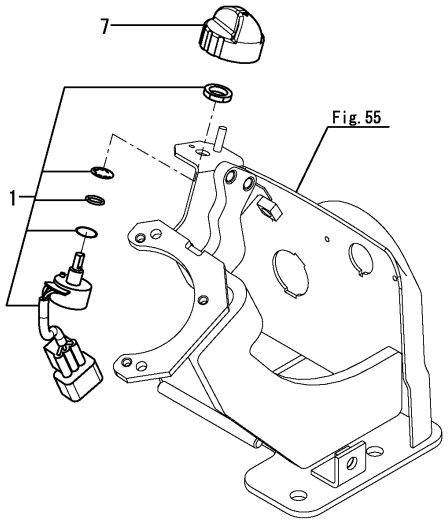




(A)=VIO30-6B P(KR)
(B)=
(C)=
(D)=
(E)=
(F)=

| No. | Lev. | Parts No. | Description | Q'ty (A) | (B) | (C) | (D) | (E) | (F) | I | R |
|---|---|---|---|---|---|---|---|---|---|---|---|
| 1 | 1 | 172A69-12100 | VOLUME ASSY, ACCEL. | 1 | | | | | | | |
| 7 | 1 | 172A69-12120 | KNOB ASSY, ACCEL. | 1 | | | | | | | |

N:Old $\overset{\text{Yes}}{\underset{\text{No}}{\leftrightarrows}}$ New, Q:Old $\overset{\text{No}}{\underset{\text{Yes}}{\leftrightarrows}}$ New, R:Old $\overset{\text{Yes}}{\underset{\text{Yes}}{\leftrightarrows}}$ New, S:Old $\overset{\text{No}}{\underset{\text{No}}{\leftrightarrows}}$ New, W:Add, Z:Discontinued, F:Interchangeable by set, K:Q'ty Change

Copyright (C) YANMAR GLOBAL CS CO., LTD. All RightsReserved.

# Fig.9. ENGINE MOUNT



(A)=VIO30-6B P(KR)
(B)=
(C)=
(D)=
(E)=
(F)=

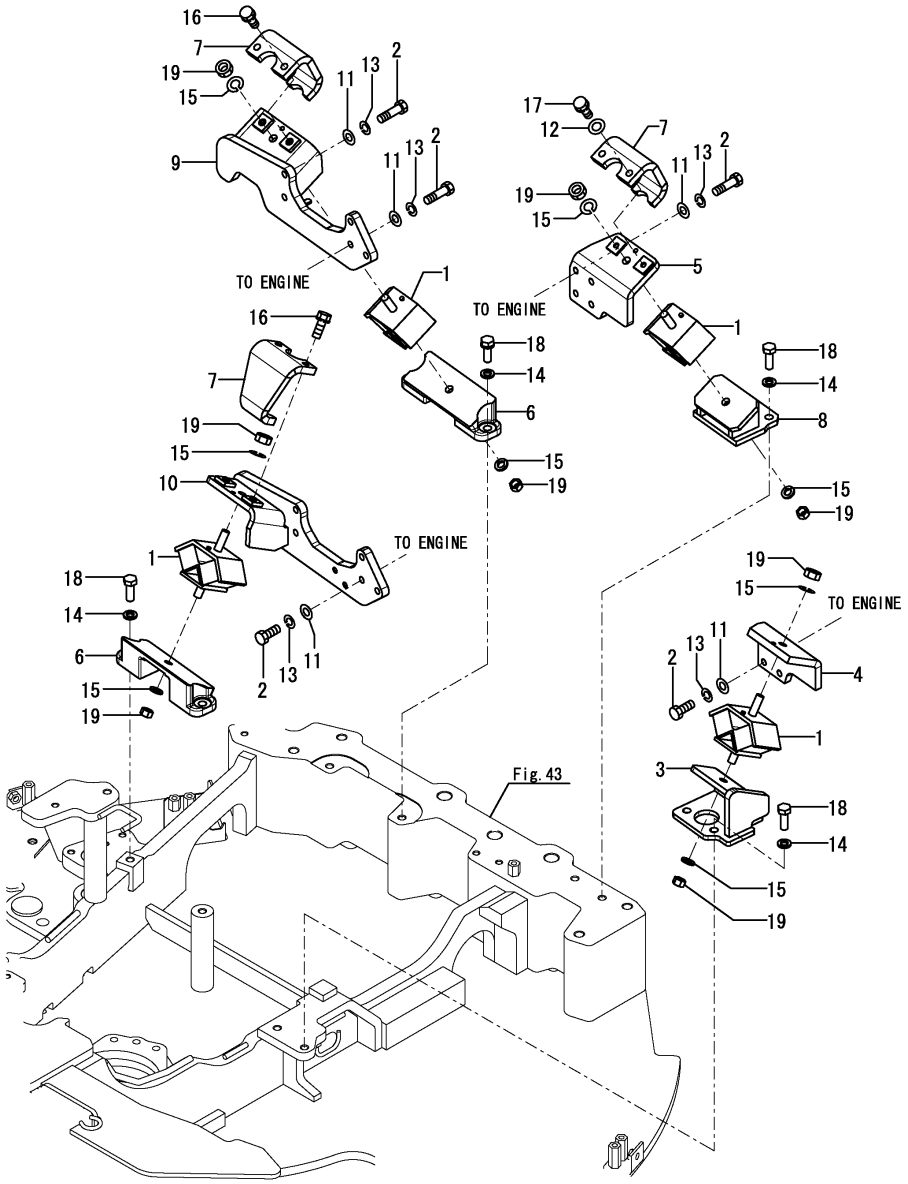


| No. | Lev. | Parts No. | Description | Q'ty (A) | (B) | (C) | (D) | (E) | (F) | I | R |
|---|---|---|---|---|---|---|---|---|---|---|---|
| 1 | 1 | 196420-02310 | RUBBER, ABSORBER 230 | 4 | | | | | | | |
| 2 | 1 | 172A21-13100 | BOLT, 10X35 11T | 18 | | | | | | | |
| 3 | 1 | 172B03-13100 | MOUNT ASSY, ENGINE L | 1 | | | | | | | |
| 4 | 1 | 172175-13110-1 | PLATE, L | 1 | | | | | | | |
| 5 | 1 | 172490-13112-1 | BRACKET ASSY, EN BR | 1 | | | | | | | |
| 6 | 1 | 172458-13120-1 | BRACKET, ENGINE | 2 | | | | | | | |
| 7 | 1 | 172124-13230-5 | STOPPER, ENGINE | 3 | | | | | | | |
| 8 | 1 | 172B03-13230 | MOUNT ASSY, ENGINE R | 1 | | | | | | | |
| 9 | 1 | 172B03-13280 | BRACKET ASSY, ENG FR | 1 | | | | | | | |
| 10 | 1 | 172B03-13290 | BRACKET ASSY, ENG FL | 1 | | | | | | | |
| 11 | 1 | 172A79-72570 | WASHER, 10.5X24X4.5 | 18 | | | | | | | |
| 12 | 1 | 22137-100000 | WASHER, 10 | 2 | | | | | | Z | |
| | (A=MZZZZZ) | | | | | | | | | | |
| 13 | 1 | 22217-100000 | WASHER, SPRING 10 | 18 | | | | | | | |
| 14 | 1 | 22217-120000 | WASHER, SPRING 12 | 8 | | | | | | | |
| 15 | 1 | 22217-120000 | WASHER, SPRING 12 | 8 | | | | | | | |
| 16 | 1 | 26013-100252 | BOLT, M10X 25 | 4 | | | | | | | |
| 17 | 1 | 26013-100302 | BOLT, M10X 30 | 2 | | | | | | | |
| 18 | 1 | 26076-120352 | BOLT, 10.912X 35 | 8 | | | | | | | |
| 19 | 1 | 26716-120002 | NUT, M12 | 8 | | | | | | | |

N:Old $\overset{\text{Yes}}{\underset{\text{No}}{\rightleftarrows}}$ New, Q:Old $\overset{\text{No}}{\underset{\text{Yes}}{\rightleftarrows}}$ New, R:Old $\overset{\text{Yes}}{\underset{\text{Yes}}{\rightleftarrows}}$ New, S:Old $\overset{\text{No}}{\underset{\text{No}}{\rightleftarrows}}$ New, W:Add, Z:Discontinued, F:Interchangeable by set, K:Q'ty Change

Copyright (C) YANMAR GLOBAL CS CO., LTD. All RightsReserved.

# Fig.10. RADIATOR SHURAUD



(A)=VIO30-6B P(KR)
(B)=
(C)=
(D)=
(E)=
(F)=

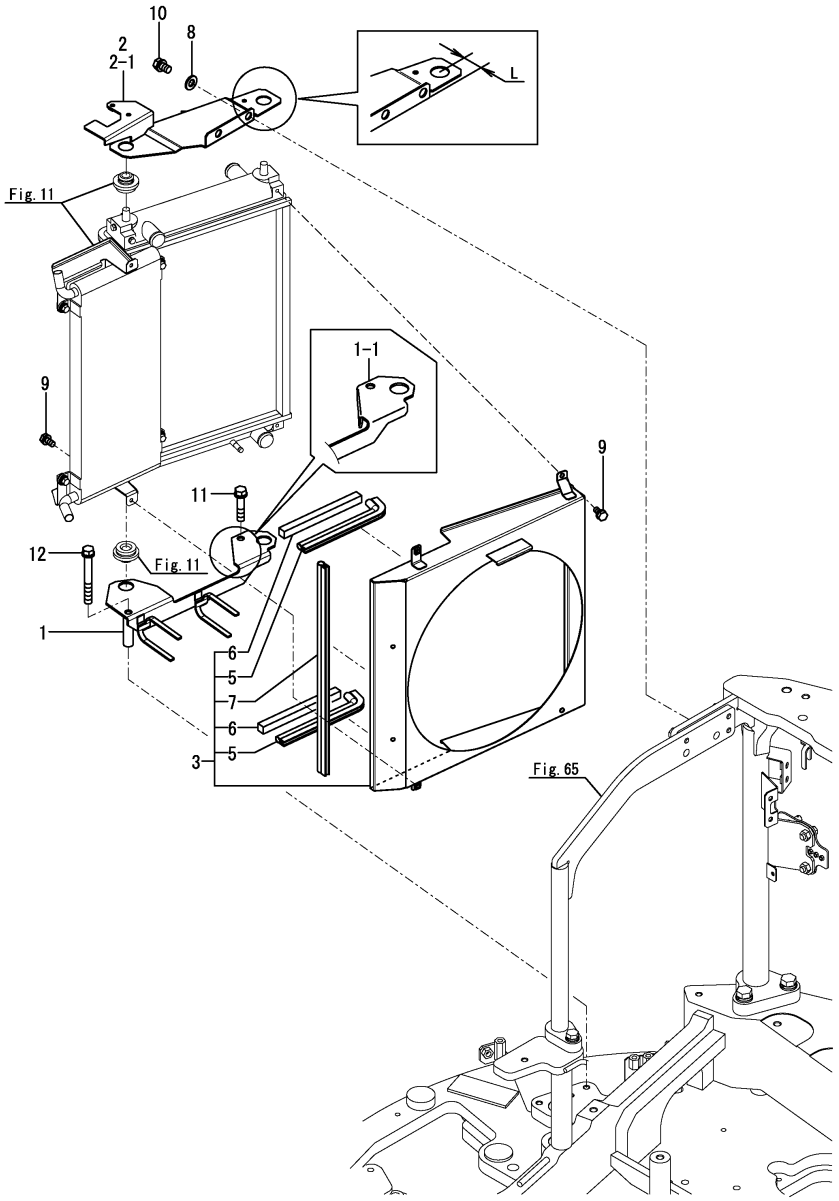


| No. | Lev. | Parts No. | Description | Q'ty (A) | (B) | (C) | (D) | (E) | (F) | I | R |
|---|---|---|---|---|---|---|---|---|---|---|---|
| 1 | 1 | 172B03-13350 | BRACKET ASSY, L | 1 | | | | | | | |
| 1-1 | 1 | 172B03-13351 | BRACKET ASSY, L | 1 | | | | | | S | |
| | (A=M60513) | | | | | | | | | | |
| 2 | 1 | 172B03-13400 | BRACKET ASSY, RAD U | 1 | | | | | | | |
| 2-1 | 1 | 172B03-13401 | BRACKET ASSY, U RAD | 1 | | | | | | S | 1 |
| | (A=MBF454) | | | | | | | | | | |
| 3 | 1 | 172B03-13900 | SHROUD ASSY | 1 | | | | | | | |
| 5 | 2 | 172B03-13970 | RUBBER, SEAL 210 | 2 | | | | | | | |
| 6 | 2 | 172B03-13980 | SEAL, 15X15X210 | 2 | | | | | | | |
| 7 | 2 | 172A69-19270 | RUBBER, SEAL 450 | 1 | | | | | | | |
| 8 | 1 | 22137-100000 | WASHER, 10 | 2 | | | | | | | |
| 9 | 1 | 26013-060122 | BOLT, M6X 12 | 4 | | | | | | | |
| 10 | 1 | 26013-100162 | BOLT, M10X 16 | 2 | | | | | | | |
| 11 | 1 | 26013-100452 | BOLT, M10X 45 | 1 | | | | | | | |
| 12 | 1 | 26013-100852 | BOLT, M10X 85 | 1 | | | | | | | |

Remarks
(1)L=No.2 : 37mm, No.2-1 : 33mm.
Interchangeable by simultaneous replacement with Fig.65 No.3-1 & 13-1.

N:Old $\overset{\text{Yes}}{\underset{\text{No}}{\rightleftarrows}}$ New, Q:Old $\overset{\text{No}}{\underset{\text{Yes}}{\rightleftarrows}}$ New, R:Old $\overset{\text{Yes}}{\underset{\text{Yes}}{\rightleftarrows}}$ New, S:Old $\overset{\text{No}}{\underset{\text{No}}{\rightleftarrows}}$ New, W:Add, Z:Discontinued, F:Interchangeable by set, K:Q'ty Change

Copyright (C) YANMAR GLOBAL CS CO., LTD. All RightsReserved.

# Fig.11. RADIATOR & OIL COOLER



(A)=VIO30-6B P(KR)
(B)=
(C)=
(D)=
(E)=
(F)=

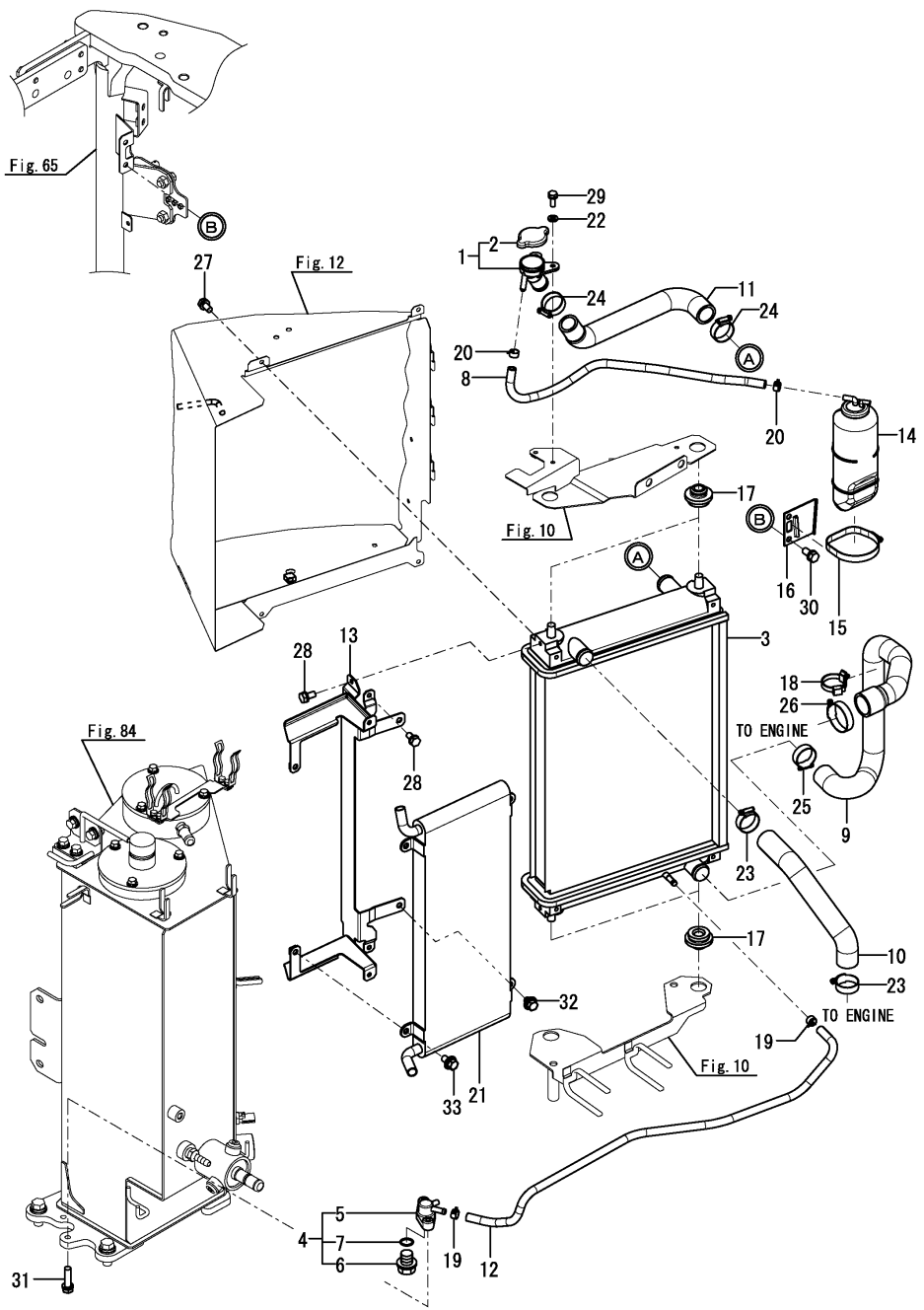


| No. | Lev. | Parts No. | Description | Q'ty (A) | (B) | (C) | (D) | (E) | (F) | I | R |
|---|---|---|---|---|---|---|---|---|---|---|---|
| 1 | 1 | 1D4105-11950 | FILLER ASSY | 1 | | | | | | | |
| 2 | 2 | 1D4105-11990 | CAP, FILLER | 1 | | | | | | | |
| 3 | 1 | 172B03-13160 | RADIATOR ASSY | 1 | | | | | | | |
| 4 | 1 | 172444-13210 | COCK ASSY, 2WAY | 1 | | | | | | | |
| 5 | 2 | 172444-13220 | BODY | 1 | | | | | | | |
| 6 | 2 | 121250-49121 | PLUG, DRAIN M16 | 1 | | | | | | | |
| 7 | 2 | 24311-000160 | O-RING, 1AP16.0 | 1 | | | | | | | |
| 8 | 1 | 172122-13381 | HOSE, L=520 | 1 | | | | | | | |
| 9 | 1 | 172B03-13550 | HOSE, CW-T A | 1 | | | | | | | |
| 10 | 1 | 172B03-13560 | HOSE, WATER B | 1 | | | | | | | |
| 11 | 1 | 172B03-13570 | HOSE, WATER C | 1 | | | | | | | |
| 12 | 1 | 172B03-13580 | HOSE ASSY, 800 | 1 | | | | | | | |
| 13 | 1 | 172B03-13800 | BRACKET ASSY, S | 1 | | | | | | | |
| 14 | 1 | 129263-44510 | TANK ASSY, SUB | 1 | | | | | | | |
| 15 | 1 | 124450-44550 | BAND, SUB TANK | 1 | | | | | | | |
| 16 | 1 | 121256-44600 | BRACKET, SUB TANK | 1 | | | | | | | |
| 17 | 1 | 184015-44680 | RUBBER, RADIATOR | 4 | | | | | | | |
| 18 | 1 | 194680-51670 | BAND, CLIP | 1 | | | | | | | |
| 19 | 1 | 124766-59050 | CLAMP, HOSE 11.5 | 2 | | | | | | | |
| 20 | 1 | 124766-59050 | CLAMP, HOSE 11.5 | 2 | | | | | | | |
| 21 | 1 | 172B03-74800 | COOLER ASSY, OIL | 1 | | | | | | | |
| 22 | 1 | 22137-060000 | WASHER, 6 | 2 | | | | | | | |
| 23 | 1 | 23001-041000 | CLAMP, HOSE 41 | 2 | | | | | | | |
| 24 | 1 | 23001-041000 | CLAMP, HOSE 41 | 2 | | | | | | | |
| 25 | 1 | 23001-041000 | CLAMP, HOSE 41 | 1 | | | | | | | |
| 26 | 1 | 23001-048000 | CLAMP, HOSE 48 | 1 | | | | | | | |
| 27 | 1 | 26013-060122 | BOLT, M6X 12 | 4 | | | | | | | |
| 28 | 1 | 26013-060122 | BOLT, M6X 12 | 4 | | | | | | | |
| 29 | 1 | 26013-060162 | BOLT, M6X 16 | 2 | | | | | | | |
| 30 | 1 | 26013-080162 | BOLT, M8X 16 | 2 | | | | | | | |
| 31 | 1 | 26013-080302 | BOLT, M8X 30 | 2 | | | | | | | |
| 32 | 1 | 26014-080122 | BOLT, M8X 12 | 2 | | | | | | | |
| 33 | 1 | 26014-080162 | BOLT, M8X 16 | 2 | | | | | | | |

N:Old $\overset{\text{Yes}}{\underset{\text{No}}{\leftrightarrows}}$ New, Q:Old $\overset{\text{No}}{\underset{\text{Yes}}{\leftrightarrows}}$ New, R:Old $\overset{\text{Yes}}{\underset{\text{Yes}}{\leftrightarrows}}$ New, S:Old $\overset{\text{No}}{\underset{\text{No}}{\leftrightarrows}}$ New, W:Add, Z:Discontinued, F:Interchangeable by set, K:Q'ty Change

Copyright (C) YANMAR GLOBAL CS CO., LTD. All RightsReserved.

# Fig.12. DUCT



(A)=VIO30-6B P(KR)
(B)=
(C)=
(D)=
(E)=
(F)=

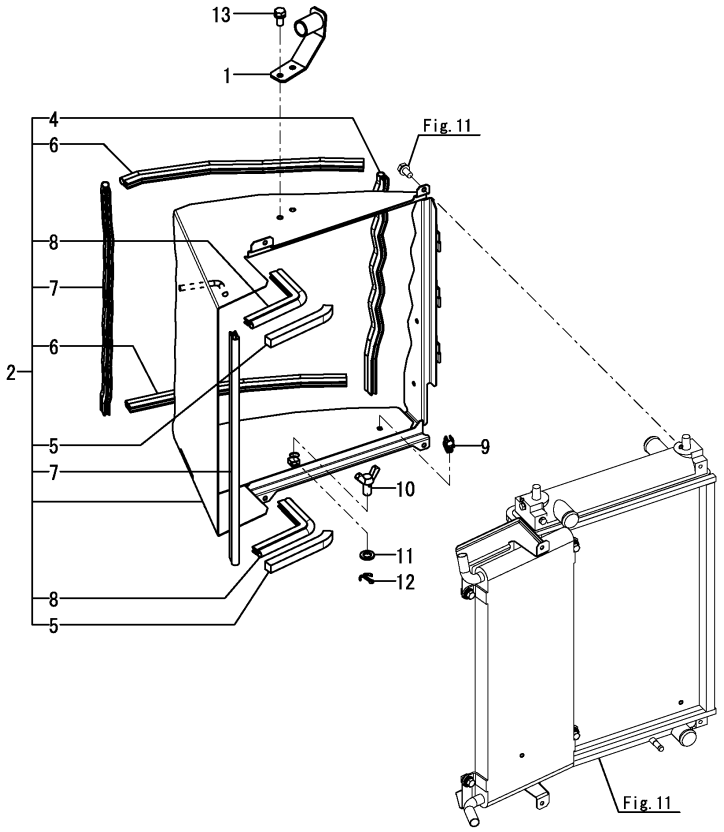


| No. | Lev. | Parts No. | Description | Q'ty (A) | (B) | (C) | (D) | (E) | (F) | I | R |
|---|---|---|---|---|---|---|---|---|---|---|---|
| 1 | 1 | 172B03-05250 | PLATE ASSY, GREASE | 1 | | | | | | | |
| 2 | 1 | 172B03-13600 | DUCT ASSY | 1 | | | | | | | |
| 4 | 2 | 172B03-13700 | SEAL, 480 | 1 | | | | | | | |
| 5 | 2 | 172B03-13710 | SEAL, 130 | 2 | | | | | | | |
| 6 | 2 | 172A64-13760 | SEAL, A | 2 | | | | | | | |
| 7 | 2 | 172A69-19270 | RUBBER, SEAL 450 | 2 | | | | | | | |
| 8 | 2 | 172A65-64840 | SEAL, 190 | 2 | | | | | | | |
| 9 | 1 | 1A7400-61250 | HOLDER, ROD 8 | 1 | | | | | | | |
| 10 | 1 | 172142-62301 | WING BOLT, M10X20 | 1 | | | | | | | |
| 11 | 1 | 22117-100000 | WASHER, 10 | 1 | | | | | | | |
| 12 | 1 | 22417-320200 | PIN, COTTER 3.2X20 | 1 | | | | | | | |
| 13 | 1 | 26013-080162 | BOLT, M8X 16 | 2 | | | | | | | |

N:Old $\overset{\text{Yes}}{\underset{\text{No}}{\leftrightarrows}}$ New, Q:Old $\overset{\text{No}}{\underset{\text{Yes}}{\leftrightarrows}}$ New, R:Old $\overset{\text{Yes}}{\underset{\text{Yes}}{\leftrightarrows}}$ New, S:Old $\overset{\text{No}}{\underset{\text{No}}{\leftrightarrows}}$ New, W:Add, Z:Discontinued, F:Interchangeable by set, K:Q'ty Change

Copyright (C) YANMAR GLOBAL CS CO., LTD. All RightsReserved.

# Fig.13. FUEL TANK



(A)=VIO30-6B P(KR)
(B)=
(C)=
(D)=
(E)=
(F)=

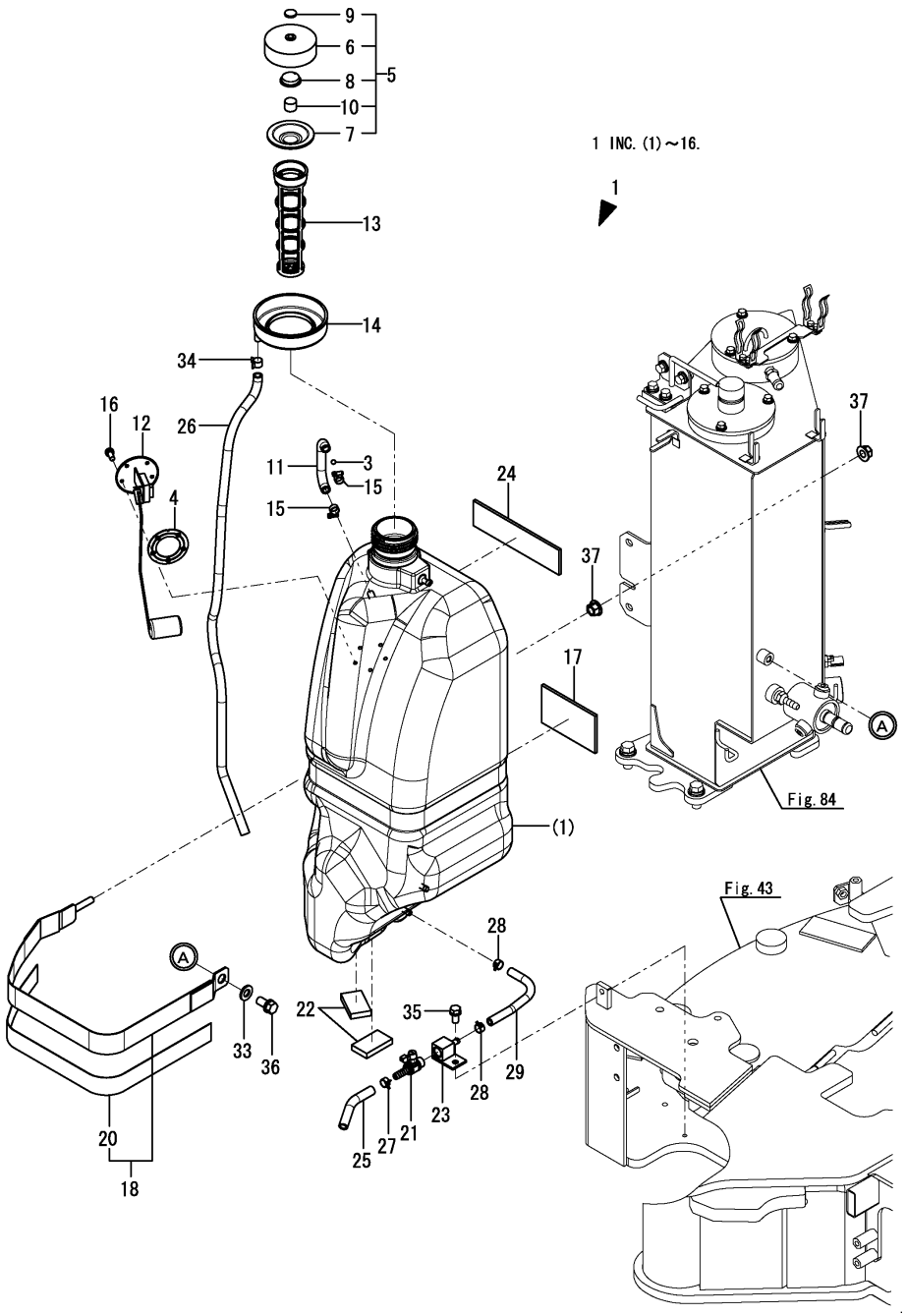


| No. | Lev. | Parts No. | Description | Q'ty (A) | (B) | (C) | (D) | (E) | (F) | I | R |
|---|---|---|---|---|---|---|---|---|---|---|---|
| 1 | 1 | 172B03-08390 | TANK KIT, FUEL | 1 | | | | | | | |
| 3 | 2 | 172447-14160 | FLOAT, 7 | 1 | | | | | | | |
| 4 | 2 | 172162-14200 | GASKET | 1 | | | | | | | |
| 5 | 2 | 172444-14200 | CAP, FUEL | 1 | | | | | | | |
| 6 | 3 | 172444-14450 | CAP | 1 | | | | | | | |
| 7 | 3 | 172444-14460 | PACKING, RUBBER | 1 | | | | | | | |
| 8 | 3 | 172444-14470 | PACKING, RUBBER | 1 | | | | | | | |
| 9 | 3 | 172444-14480 | WASHER | 1 | | | | | | | |
| 10 | 3 | 172444-14490 | SPONGE | 1 | | | | | | | |
| 11 | 2 | 172458-14203 | HOSE, FUEL GAUGE | 1 | | | | | | | |
| 12 | 2 | 172B03-14220 | GAUGE, FUEL | 1 | | | | | | | |
| 13 | 2 | 172B03-14250 | STRAINER, 200 | 1 | | | | | | | |
| 14 | 2 | 172458-14370 | SUMP, FUEL | 1 | | | | | | | |
| 15 | 2 | 23000-013000 | CLAMP, 13 | 2 | | | | | | | |
| 16 | 2 | 26022-050122 | SCREW, M5X12 | 5 | | | | | | | |
| 17 | 1 | 172444-14130 | PLATE, RUBBER A | 1 | | | | | | | |
| 18 | 1 | 172B03-14150 | CLAMP ASSY, FUEL | 1 | | | | | | | |
| 20 | 2 | 172B03-14200 | RUBBER, CLAMP | 1 | | | | | | | |
| 21 | 1 | 172A69-14230 | VALVE, FUEL DRAIN | 1 | | | | | | | |
| 22 | 1 | 172B03-14230 | RUBBER, FUEL A | 2 | | | | | | | |
| 23 | 1 | 172B03-14270 | JOINT ASSY, DRAIN | 1 | | | | | | | |
| 24 | 1 | 172458-14340 | PLATE, RUBBER A | 1 | | | | | | | |
| 25 | 1 | 172444-14410 | HOSE, FUEL DRAIN | 1 | | | | | | | |
| 26 | 1 | 172A47-14520 | HOSE, 9.5X880 | 1 | | | | | | | |
| 27 | 1 | 106990-44660 | CLAMP, HOSE 12.5 | 1 | | | | | | | |
| 28 | 1 | 124766-59050 | CLAMP, HOSE 11.5 | 2 | | | | | | | |
| 29 | 1 | 184014-59640 | HOSE ASSY, FUEL 90 | 1 | | | | | | | |
| 29-1 | 1 (A=MBF239) | 172B03-14770 | HOSE ASSY,FO 190 | 1 | | | | | | N | |
| 33 | 1 | 22137-100000 | WASHER, 10 | 1 | | | | | | | |
| 34 | 1 | 23080-013000 | CLAMP, 13 | 1 | | | | | | | |
| 35 | 1 | 26013-080162 | BOLT, M8X 16 | 1 | | | | | | | |
| 36 | 1 | 26013-100202 | BOLT, M10X 20 | 1 | | | | | | | |
| 37 | 1 | 26367-100002 | NUT, M10 | 2 | | | | | | | |

N:Old $\overset{\text{Yes}}{\underset{\text{No}}{\leftrightarrows}}$ New, Q:Old $\overset{\text{No}}{\underset{\text{Yes}}{\leftrightarrows}}$ New, R:Old $\overset{\text{Yes}}{\underset{\text{Yes}}{\leftrightarrows}}$ New, S:Old $\overset{\text{No}}{\underset{\text{No}}{\leftrightarrows}}$ New, W:Add, Z:Discontinued, F:Interchangeable by set, K:Q'ty Change

Copyright (C) YANMAR GLOBAL CS CO., LTD. All RightsReserved.

# Fig.14. FUEL LINE



(A)=VIO30-6B P(KR)
(B)=
(C)=
(D)=
(E)=
(F)=

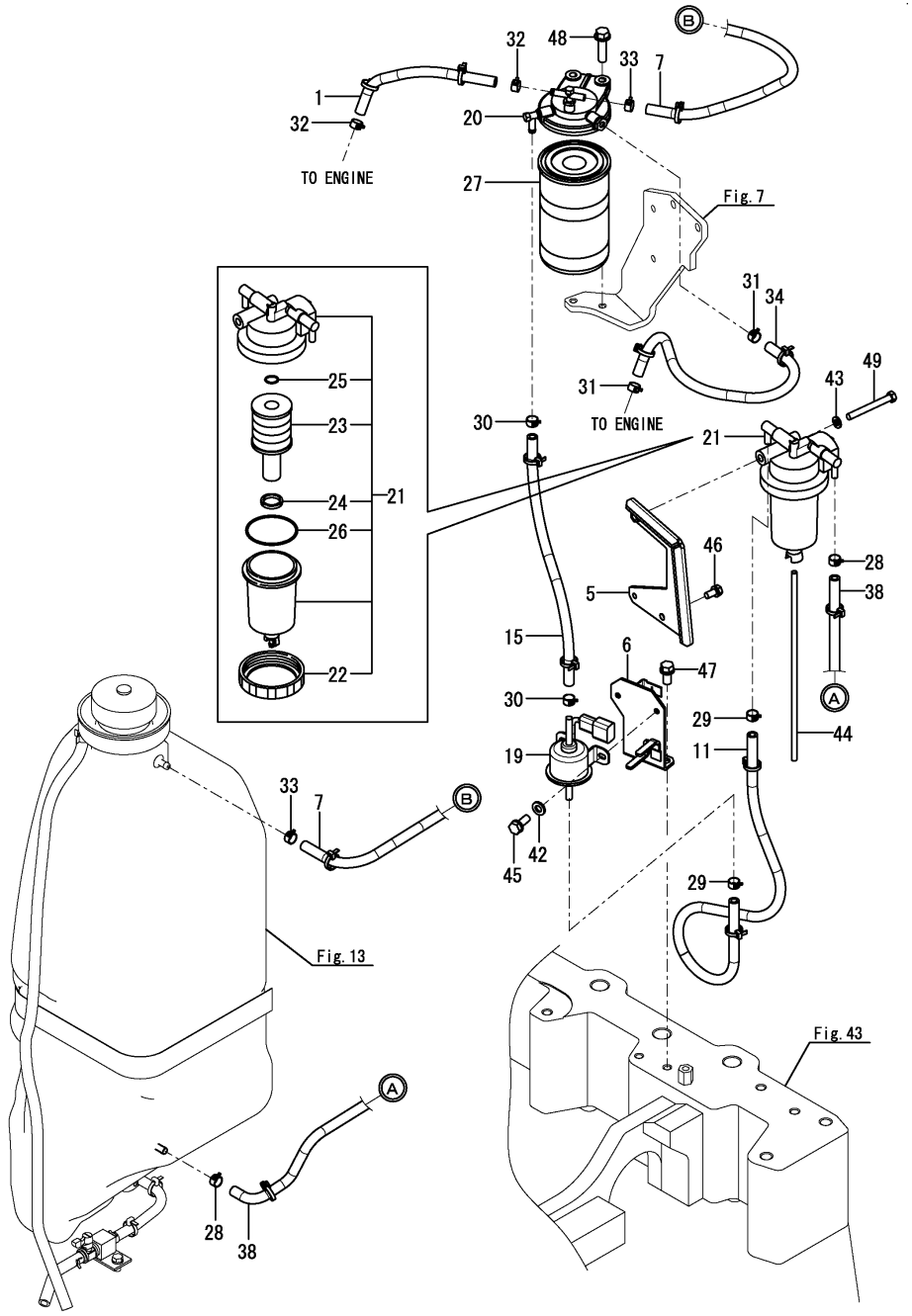


| No. | Lev. | Parts No. | Description | Q'ty (A) | (B) | (C) | (D) | (E) | (F) | I | R |
|---|---|---|---|---|---|---|---|---|---|---|---|
| 1 | 1 | 172A64-14250 | HOSE ASSY, FUEL 260 | 1 | | | | | | | |
| 5 | 1 | 172B03-14300 | BRACKET ASSY | 1 | | | | | | | |
| 6 | 1 | 172B03-14350 | BRACKET ASSY, FP | 1 | | | | | | | |
| 7 | 1 | 172A46-14601 | HOSE ASSY, FUEL 1750 | 1 | | | | | | | |
| 11 | 1 | 172B03-14610 | HOSE ASSY, FUEL 600 | 1 | | | | | | | |
| 15 | 1 | 172448-14670 | HOSE ASSY, FUEL 400 | 1 | | | | | | | |
| 19 | 1 | 129612-52100 | PUMP, FUEL FEED | 1 | | | | | | | |
| 20 | 1 | 129004-55612 | BRACKET, FILTER | 1 | | | | | | | |
| 21 | 1 | 184016-55701 | SEPARATOR ASSY,WATER | 1 | | | | | | | |
| 22 | 2 | 129100-55690 | NUT, RETAINING | 1 | | | | | | | |
| 23 | 2 | 119802-55710 | ELEMENT, FUEL | 1 | | | | | | | |
| 24 | 2 | 184016-55710 | FLOAT | 1 | | | | | | | |
| 25 | 2 | 24311-000160 | O-RING, 1AP16.0 | 1 | | | | | | | |
| 26 | 2 | 24321-000650 | O-RING, 1AG65.0 | 1 | | | | | | | |
| 27 | 1 | 129907-55810 | FILTER, FUEL | 1 | | | | | | | |
| 28 | 1 | 124766-59050 | CLAMP, HOSE 11.5 | 2 | | | | | | | |
| 29 | 1 | 124766-59050 | CLAMP, HOSE 11.5 | 2 | | | | | | | |
| 30 | 1 | 124766-59050 | CLAMP, HOSE 11.5 | 2 | | | | | | | |
| 31 | 1 | 124766-59050 | CLAMP, HOSE 11.5 | 2 | | | | | | | |
| 32 | 1 | 124766-59050 | CLAMP, HOSE 11.5 | 2 | | | | | | | |
| 33 | 1 | 124766-59050 | CLAMP, HOSE 11.5 | 2 | | | | | | | |
| 34 | 1 | 184012-59100 | PIPE ASSY, FUEL 450 | 1 | | | | | | | |
| 38 | 1 | 184016-59300 | HOSE ASSY, FUEL 1600 | 1 | | | | | | | |
| 42 | 1 | 22137-060000 | WASHER, 6 | 2 | | | | | | | |
| 43 | 1 | 22217-080000 | WASHER, SPRING 8 | 1 | | | | | | | |
| 44 | 1 | 23061-050300 | PIPE, 5X 300 | 1 | | | | | | | |
| 45 | 1 | 26013-060162 | BOLT, M6X 16 | 2 | | | | | | | |
| 46 | 1 | 26013-080162 | BOLT, M8X 16 | 2 | | | | | | | |
| 47 | 1 | 26013-100202 | BOLT, M10X 20 | 2 | | | | | | | |
| 48 | 1 | 26106-080302 | BOLT, M8X 30 PLATED | 2 | | | | | | | |
| 49 | 1 | 26116-080702 | BOLT, M8X 70 PLATED | 1 | | | | | | | |

N:Old ◄Yes/No► New, Q:Old ◄No/Yes► New, R:Old ◄Yes/Yes► New, S:Old ◄No/No► New, W:Add, Z:Discontinued, F:Interchangeable by set, K:Q'ty Change

Copyright (C) YANMAR GLOBAL CS CO., LTD. All RightsReserved.

# Fig.15. BATTERY



(A)=VIO30-6B P(KR)
(B)=
(C)=
(D)=
(E)=
(F)=

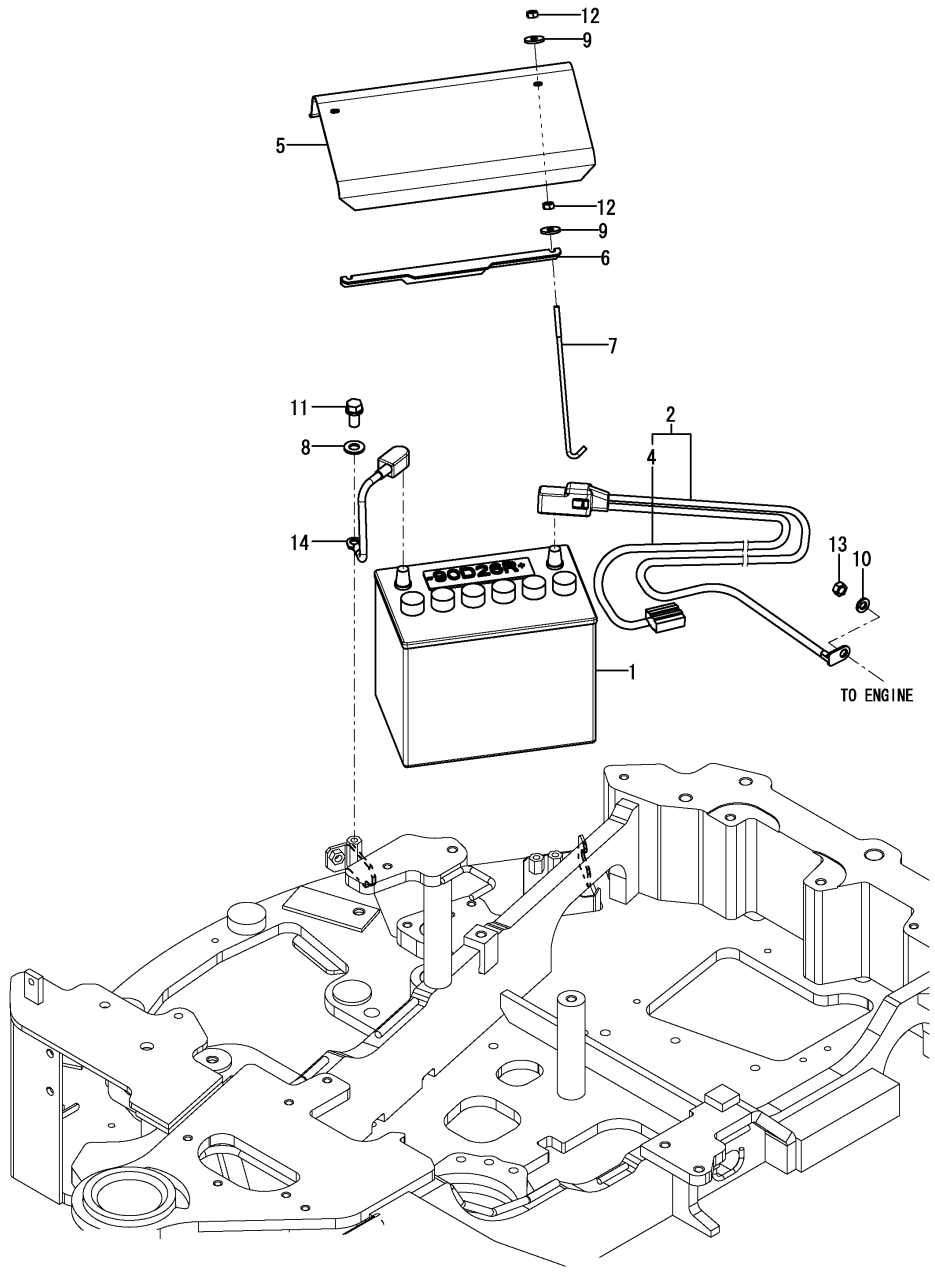


| No. | Lev. | Parts No. | Description | Q'ty (A) | (B) | (C) | (D) | (E) | (F) | I | R |
|---|---|---|---|---|---|---|---|---|---|---|---|
| 1 | 1 | 172653-16100 | BATTERY, 90D26R | 1 | | | | | | | |
| 2 | 1 | 172B03-16100 | CABLE ASSY,+ BATTERY | 1 | | | | | | | |
| 4 | 2 | 172B03-16120 | HARNESS, BATTERY + | 1 | | | | | | | |
| 5 | 1 | 172B03-16160 | COVER, BATTERY | 1 | | | | | | | |
| 6 | 1 | 172B03-16181 | CLAMP, BATTERY | 1 | | | | | | | |
| 7 | 1 | 172631-16350 | ROD, BATTERY CLAMP | 2 | | | | | | | |
| 8 | 1 | 22137-100000 | WASHER, 10 | 1 | | | | | | | |
| 9 | 1 | 22157-060000 | WASHER, 6 | 4 | | | | | | | |
| 10 | 1 | 22217-080000 | WASHER, SPRING 8 | 1 | | | | | | | |
| 11 | 1 | 26013-100202 | BOLT, M10X 20 | 1 | | | | | | | |
| 12 | 1 | 26716-060002 | NUT, M6 | 4 | | | | | | | |
| 13 | 1 | 26716-080002 | NUT, M8 | 1 | | | | | | | |
| 14 | 1 | 172187-16110 | CORD, BATTERY MINUS | 1 | | | | | | | |

N:Old $\overset{\text{Yes}}{\underset{\text{No}}{\rightleftarrows}}$ New, Q:Old $\overset{\text{No}}{\underset{\text{Yes}}{\rightleftarrows}}$ New, R:Old $\overset{\text{Yes}}{\underset{\text{Yes}}{\rightleftarrows}}$ New, S:Old $\overset{\text{No}}{\underset{\text{No}}{\rightleftarrows}}$ New, W:Add, Z:Discontinued, F:Interchangeable by set, K:Q'ty Change

Copyright (C) YANMAR GLOBAL CS CO., LTD. All RightsReserved.

# Fig.16. AROUND THE ENGINE(TO M60570)



(A)=VIO30-6B P(KR)
(B)=
(C)=
(D)=
(E)=
(F)=

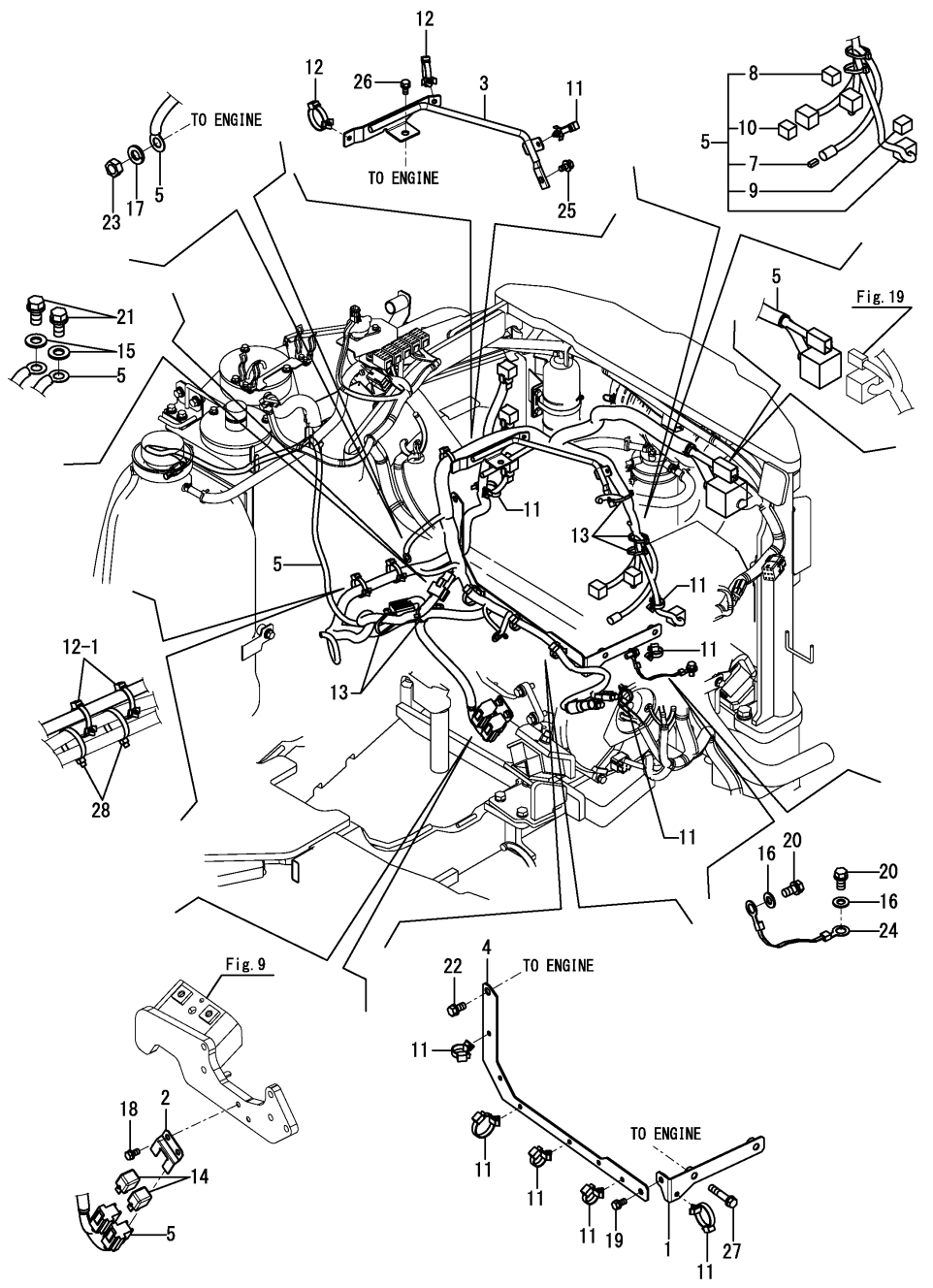


| No. | Lev. | Parts No. | Description | Q'ty (A) | (B) | (C) | (D) | (E) | (F) | I | R |
|---|---|---|---|---|---|---|---|---|---|---|---|
| 1 | 1 | 172B03-11450 | BRACKET ASSY, COVER | 1 | | | | | | | |
| 2 | 1 | 172B03-16170 | STAY, RELAY | 1 | | | | | | | |
| 3 | 1 | 172B03-16300 | STAY ASSY, HARNESS | 1 | | | | | | | |
| 4 | 1 | 172B03-16440 | SUPPORT, HARNESS | 1 | | | | | | | |
| 5 | 1 | 172B03-16500 | HARNESS ASSY, ENGINE | 1 | | | | | | | |
| 7 | 2 | 172458-16550 | FUSE, SLOW BLOW 50A | 1 | | | | | | | |
| 8 | 2 | 172A65-16550 | FUSE, SLOW BLOW 60A | 1 | | | | | | | |
| 9 | 2 | 172447-17150 | FUSE, SLOW BLOW 40A | 1 | | | | | | | |
| 10 | 2 | 198153-51700 | FUSE, SLOW BLOW 80A | 1 | | | | | | | |
| 11 | 1 | 194680-51670 | BAND, CLIP | 10 | | | | | | | |
| 12 | 1 | 194680-51670 | BAND, CLIP | 2 | | | | | | | |
| 12-1 | 1 | 194680-51670 | BAND, CLIP | 4 | | | | | | K | |
| | (A=*2012.12.) | | | | | | | | | | |
| 13 | 1 | 194202-56460 | BAND, BINDING 200 | 5 | | | | | | | |
| 14 | 1 | 129927-77920 | RELAY, ISO 70A | 2 | | | | | | | |
| 15 | 1 | 22137-100000 | WASHER, 10 | 2 | | | | | | | |
| 16 | 1 | 22137-100000 | WASHER, 10 | 2 | | | | | | | |
| 17 | 1 | 22217-060000 | WASHER, SPRING 6 | 1 | | | | | | | |
| 18 | 1 | 26013-080162 | BOLT, M8X 16 | 2 | | | | | | | |
| 19 | 1 | 26013-080162 | BOLT, M8X 16 | 1 | | | | | | | |
| 20 | 1 | 26013-100202 | BOLT, M10X 20 | 2 | | | | | | | |
| 21 | 1 | 26013-100202 | BOLT, M10X 20 | 2 | | | | | | | |
| 22 | 1 | 26013-100202 | BOLT, M10X 20 | 1 | | | | | | | |
| 23 | 1 | 26716-060002 | NUT, M6 | 1 | | | | | | | |
| 24 | 1 | 933171-15801 | CORD, ENGINE EARTH | 1 | | | | | | | |
| 25 | 1 | 26014-080162 | BOLT, M8X 16 | 1 | | | | | | | |
| 26 | 1 | 26013-080162 | BOLT, M8X 16 | 1 | | | | | | | |
| 27 | 1 | 26013-100502 | BOLT, M10X 50 | 2 | | | | | | | |
| 28 | 1 | 194202-56460 | BAND, BINDING 200 | 2 | | | | | | W | |
| | (A=*2012.12.) | | | | | | | | | | |

N:Old $\overset{\text{Yes}}{\underset{\text{No}}{\rightleftarrows}}$ New, Q:Old $\overset{\text{No}}{\underset{\text{Yes}}{\rightleftarrows}}$ New, R:Old $\overset{\text{Yes}}{\underset{\text{Yes}}{\rightleftarrows}}$ New, S:Old $\overset{\text{No}}{\underset{\text{No}}{\rightleftarrows}}$ New, W:Add, Z:Discontinued, F:Interchangeable by set, K:Q'ty Change

Copyright (C) YANMAR GLOBAL CS CO., LTD. All RightsReserved.

# Fig.137. (16A)AROUND THE ENGINE(FROM M60571)

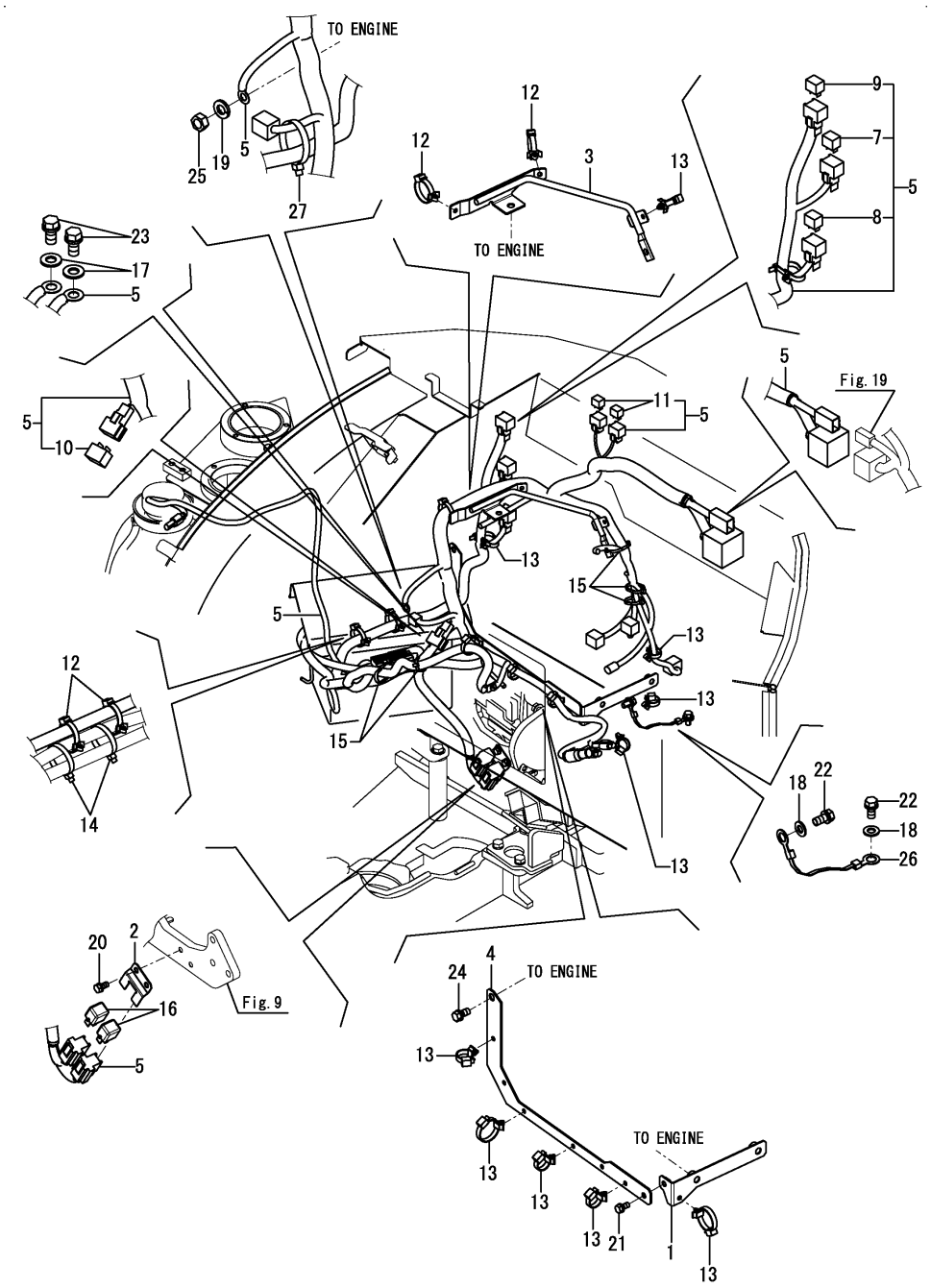


(A)=VIO30-6B P(KR)
(B)=
(C)=
(D)=
(E)=
(F)=

| No. | Lev. | Parts No. | Description | Q'ty (A) | (B) | (C) | (D) | (E) | (F) | I | R |
|---|---|---|---|---|---|---|---|---|---|---|---|
| 1 | 1 | 172B03-11450 | BRACKET ASSY, COVER | 1 | | | | | | | |
| 2 | 1 | 172B03-16170 | STAY, RELAY | 1 | | | | | | | |
| 3 | 1 | 172B03-16300 | STAY ASSY, HARNESS | 1 | | | | | | | |
| 4 | 1 | 172B03-16440 | SUPPORT, HARNESS | 1 | | | | | | | |
| 5 | 1 | 172B03-16501 | HARNESS ASSY, ENGINE | 1 | | | | | | | |
| 5-1 | 1 | 172B03-16502 | HARNESS ASSY, ENGINE | 1 | | | | | | N | |
| | (A=*2014.12.) | | | | | | | | | | |
| 7 | 2 | 172458-16550 | FUSE, SLOW BLOW 50A | 1 | | | | | | | |
| 8 | 2 | 172A65-16550 | FUSE, SLOW BLOW 60A | 1 | | | | | | | |
| 9 | 2 | 172447-17150 | FUSE, SLOW BLOW 40A | 1 | | | | | | | |
| 10 | 2 | 198153-51700 | FUSE, SLOW BLOW 80A | 1 | | | | | | | |
| 11 | 2 | 1E8235-84910 | DIODE, 090 31 | 2 | | | | | | | |
| 12 | 1 | 194680-51670 | BAND, CLIP | 4 | | | | | | | |
| 13 | 1 | 194680-51670 | BAND, CLIP | 10 | | | | | | | |
| 14 | 1 | 194202-56460 | BAND, BINDING 200 | 2 | | | | | | | |
| 15 | 1 | 194202-56460 | BAND, BINDING 200 | 5 | | | | | | | |
| 16 | 1 | 129927-77920 | RELAY, ISO 70A | 2 | | | | | | | |
| 17 | 1 | 22137-100000 | WASHER, 10 | 2 | | | | | | | |
| 18 | 1 | 22137-100000 | WASHER, 10 | 2 | | | | | | | |
| 19 | 1 | 22217-060000 | WASHER, SPRING 6 | 1 | | | | | | | |
| 20 | 1 | 26013-080162 | BOLT, M8X 16 | 2 | | | | | | | |
| 21 | 1 | 26013-080162 | BOLT, M8X 16 | 1 | | | | | | | |
| 22 | 1 | 26013-100202 | BOLT, M10X 20 | 2 | | | | | | | |
| 23 | 1 | 26013-100202 | BOLT, M10X 20 | 2 | | | | | | | |
| 24 | 1 | 26013-100202 | BOLT, M10X 20 | 1 | | | | | | | |
| 25 | 1 | 26716-060002 | NUT, M6 | 1 | | | | | | | |
| 26 | 1 | 933171-15801 | CORD, ENGINE EARTH | 1 | | | | | | | |
| 27 | 1 | 194202-56460 | BAND, BINDING 200 | 1 | | | | | | W | |
| | (A=*2015.01.) | | | | | | | | | | |

N:Old $\overset{\text{Yes}}{\underset{\text{No}}{\rightleftarrows}}$ New, Q:Old $\overset{\text{No}}{\underset{\text{Yes}}{\rightleftarrows}}$ New, R:Old $\overset{\text{Yes}}{\underset{\text{Yes}}{\rightleftarrows}}$ New, S:Old $\overset{\text{No}}{\underset{\text{No}}{\rightleftarrows}}$ New, W:Add, Z:Discontinued, F:Interchangeable by set, K:Q'ty Change

Copyright (C) YANMAR GLOBAL CS CO., LTD. All RightsReserved.

# Fig.17. ELECTRIC PARTS(LOW-HIGH SWITCH)(TO M60543)



(A)=VIO30-6B P(KR)
(B)=
(C)=
(D)=
(E)=
(F)=

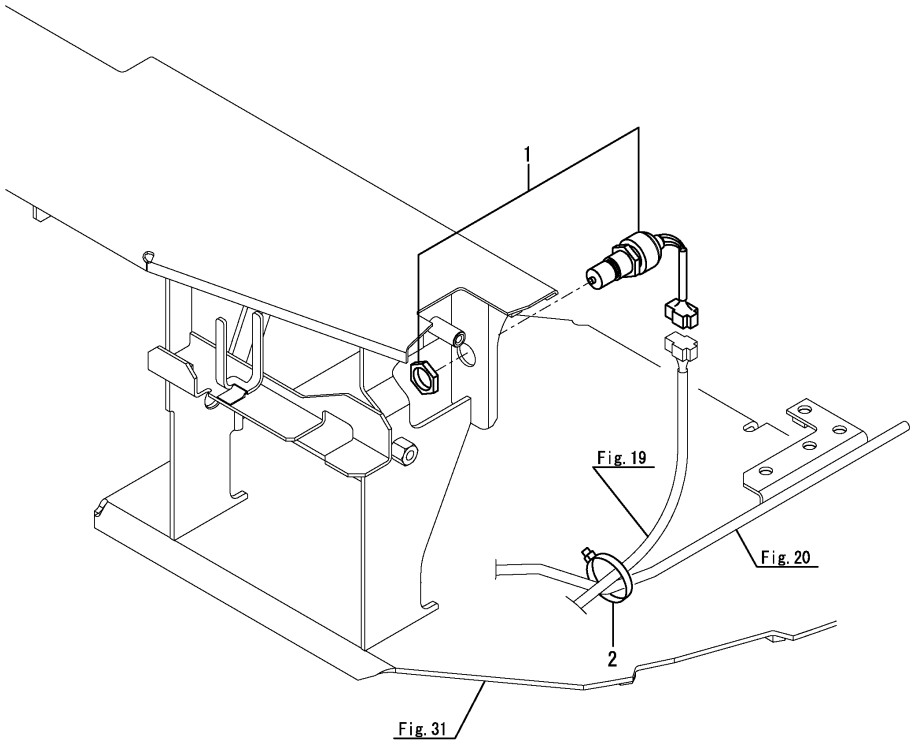


| No. | Lev. | Parts No. | Description | Q'ty (A) | (B) | (C) | (D) | (E) | (F) | I | R |
|---|---|---|---|---|---|---|---|---|---|---|---|
| 1 | 1 | 1D4103-18300 | SWITCH, PUSH | 1 | | | | | | | |
| 2 | 1 | 194202-56460 | BAND, BINDING 200 | 1 | | | | | | | |

N:Old ⇔ New (Yes/No), Q:Old ⇔ New (No/Yes), R:Old ⇔ New (Yes/Yes), S:Old ⇔ New (No/No), W:Add, Z:Discontinued, F:Interchangeable by set, K:Q'ty Change

Copyright (C) YANMAR GLOBAL CS CO., LTD. All RightsReserved.

# Fig.18. ELECTRIC PARTS(HORN)

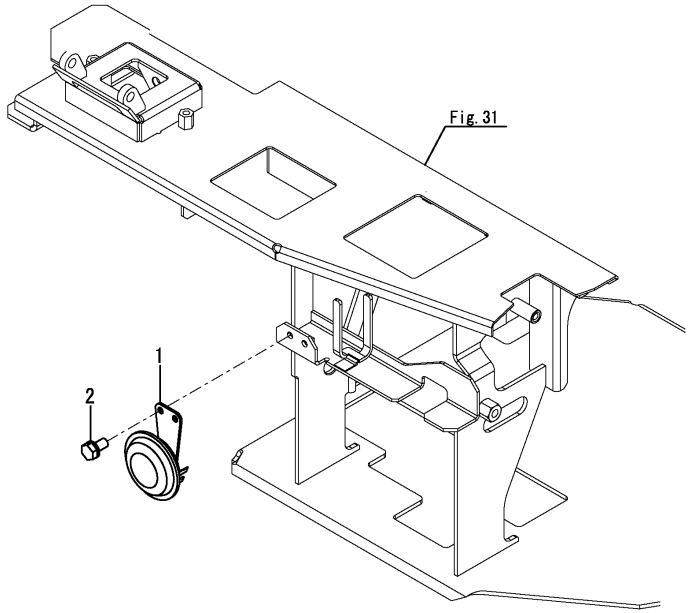




(A)=VIO30-6B P(KR)
(B)=
(C)=
(D)=
(E)=
(F)=

| No. | Lev. | Parts No. | Description | Q'ty (A) | (B) | (C) | (D) | (E) | (F) | I | R |
|---|---|---|---|---|---|---|---|---|---|---|---|
| 1 | 1 | 194151-57100 | HORN | 1 | | | | | | | |
| 2 | 1 | 26013-060122 | BOLT, M6X 12 | 2 | | | | | | | |

N:Old $\overset{\text{Yes}}{\underset{\text{No}}{\leftrightarrows}}$ New, Q:Old $\overset{\text{No}}{\underset{\text{Yes}}{\leftrightarrows}}$ New, R:Old $\overset{\text{Yes}}{\underset{\text{Yes}}{\leftrightarrows}}$ New, S:Old $\overset{\text{No}}{\underset{\text{No}}{\leftrightarrows}}$ New, W:Add, Z:Discontinued, F:Interchangeable by set, K:Q'ty Change

Copyright (C) YANMAR GLOBAL CS CO., LTD. All RightsReserved.

# Fig.19. ELECTRIC PARTS(SEAT MOUNT)



(A)=VIO30-6B P(KR)
(B)=
(C)=
(D)=
(E)=
(F)=

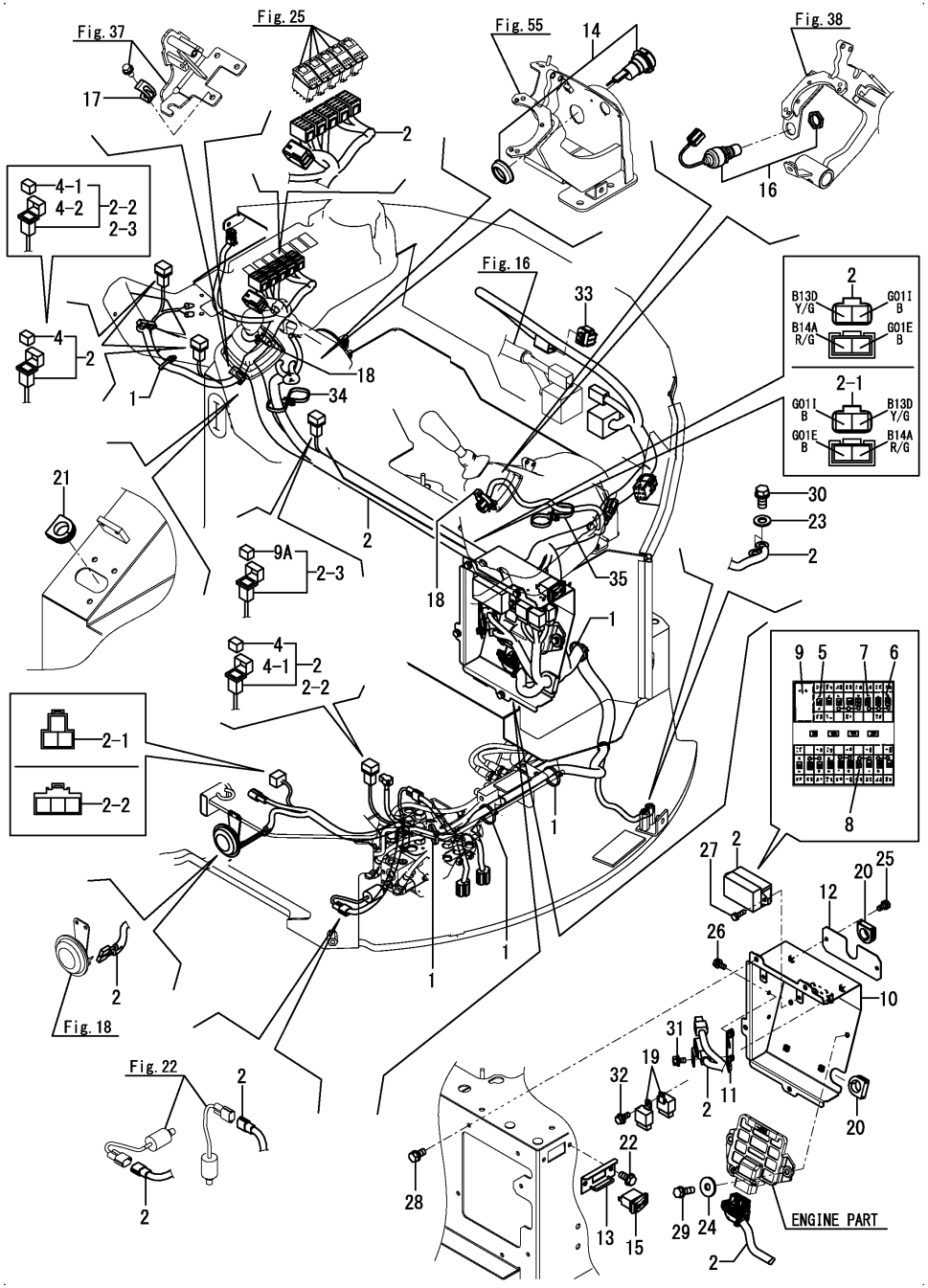


| No. | Lev. | Parts No. | Description | Q'ty (A) | (B) | (C) | (D) | (E) | (F) | I | R |
|---|---|---|---|---|---|---|---|---|---|---|---|
| 1 | 1 | 172126-11510 | BAND, BINDING 300 | 5 | | | | | | | |
| 2 | 1 | 172B03-16520 | HARNESS ASSY,SHEET | 1 | | | | | | | |
| 2-1 | 1 | 172B03-16521 | HARNESS ASSY, MOUNT | 1 | | | | | | S | |
| | (A=M60551) | | | | | | | | | | |
| 2-2 | 1 | 172B03-16580 | HARNESS ASSY, WIRE | 1 | | | | | | S | |
| | (A=M60575) | | | | | | | | | | |
| 2-3 | 1 | 172B03-16581 | HARNESS ASSY, MOUNT | 1 | | | | | | N | |
| | (A=*2014.12.) | | | | | | | | | | |
| 2-4 | 1 | 172B03-16582 | HARNESS ASSY,SEAT EX | 1 | | | | | | N | |
| | (A=MBF404) | | | | | | | | | | |
| 4 | 2 | 1A7130-51130 | DIODE, 1.5A | 3 | | | | | | | |
| 4-1 | 2 | 1A7130-51130 | DIODE, 1.5A | 2 | | | | | | K | |
| | (A=M60575) | | | | | | | | | | |
| 4-2 | 2 | 1A7130-51130 | DIODE, 1.5A | 1 | | | | | | K | |
| | (A=*2014.12.) | | | | | | | | | | |
| 5 | 2 | 198535-52110 | FUSE, 5A | 9 | | | | | | | |
| 6 | 2 | 198535-52120 | FUSE, 10A | 4 | | | | | | | |
| 7 | 2 | 198535-52130 | FUSE, 15A | 5 | | | | | | | |
| 8 | 2 | 198535-52170 | FUSE, 30A | 4 | | | | | | | |
| 9 | 2 | 1E9570-83900 | PULLER, MINI FUSE | 1 | | | | | | | |
| 9A | 2 | 1E8235-84910 | DIODE, 090 31 | 1 | | | | | | W | |
| | (A=*2014.12.) | | | | | | | | | | |
| 10 | 1 | 172B03-17000 | BOX ASSY, ELECTRIC | 1 | | | | | | | |
| 11 | 1 | 172B03-17051 | STAY ASSY, CONNECTOR | 1 | | | | | | | |
| 12 | 1 | 172B03-17100 | COVER, FUSE | 1 | | | | | | | |
| 12-1 | 1 | 172B03-17110 | COVER, FUSE | 1 | | | | | | N | |
| | (A=M62935) | | | | | | | | | | |
| 13 | 1 | 172A89-17180 | PLATE ASSY, SWITCH | 1 | | | | | | | |
| 14 | 1 | 172A64-17250 | SOCKET ASSY | 1 | | | | | | | |
| 15 | 1 | 172A69-17260 | SWITCH, ENGINE STOP | 1 | | | | | | | |
| 16 | 1 | 1D4103-18300 | SWITCH, PUSH | 1 | | | | | | | |
| 17 | 1 | 194440-51620 | CLAMP, B | 1 | | | | | | | |
| 17-1 | 1 | 1A1686-57850 | CLAMP, 80 | 1 | | | | | | N | |
| | (A=*2015.03.) | | | | | | | | | | |
| 18 | 1 | 194680-51670 | BAND, CLIP | 2 | | | | | | | |
| 19 | 1 | 198461-52950 | RELAY, CA TYPE C | 4 | | | | | | | |
| 20 | 1 | 172165-62800 | GROMMET, 26 | 2 | | | | | | | |
| 21 | 1 | 172165-62800 | GROMMET, 26 | 1 | | | | | | | |
| 22 | 1 | 172519-63240 | BOLT, M8X16 | 2 | | | | | | | |
| 23 | 1 | 22137-100000 | WASHER, 10 | 2 | | | | | | | |
| 24 | 1 | 22157-080000 | WASHER, 8 | 2 | | | | | | | |
| 25 | 1 | 26013-060122 | BOLT, M6X 12 | 2 | | | | | | | |
| 26 | 1 | 26013-060122 | BOLT, M6X 12 | 2 | | | | | | | |
| 27 | 1 | 26013-060202 | BOLT, M6X 20 | 2 | | | | | | | |
| 28 | 1 | 26013-080162 | BOLT, M8X 16 | 4 | | | | | | | |
| 29 | 1 | 26013-080252 | BOLT, M8X 25 | 2 | | | | | | | |
| 30 | 1 | 26013-100202 | BOLT, M10X 20 | 2 | | | | | | | |
| 31 | 1 | 26014-060122 | BOLT, M6X 12 | 1 | | | | | | | |
| 32 | 1 | 26014-060162 | BOLT, M6X 16 | 2 | | | | | | | |
| 33 | 1 | 172B03-16880 | CONNECTOR, 12P | 1 | | | | | | | |
| 34 | 1 | 172187-78580 | BAND, BINDING W 397 | 1 | | | | | | W | |

N:Old ⇄ New, Q:Old ⇄ New, R:Old ⇄ New, S:Old ⇄ New, W:Add, Z:Discontinued, F:Interchangeable by set, K:Q'ty Change

++ CONTINUE ++

Copyright (C) YANMAR GLOBAL CS CO., LTD. All RightsReserved.

# Fig.19. ELECTRIC PARTS(SEAT MOUNT)

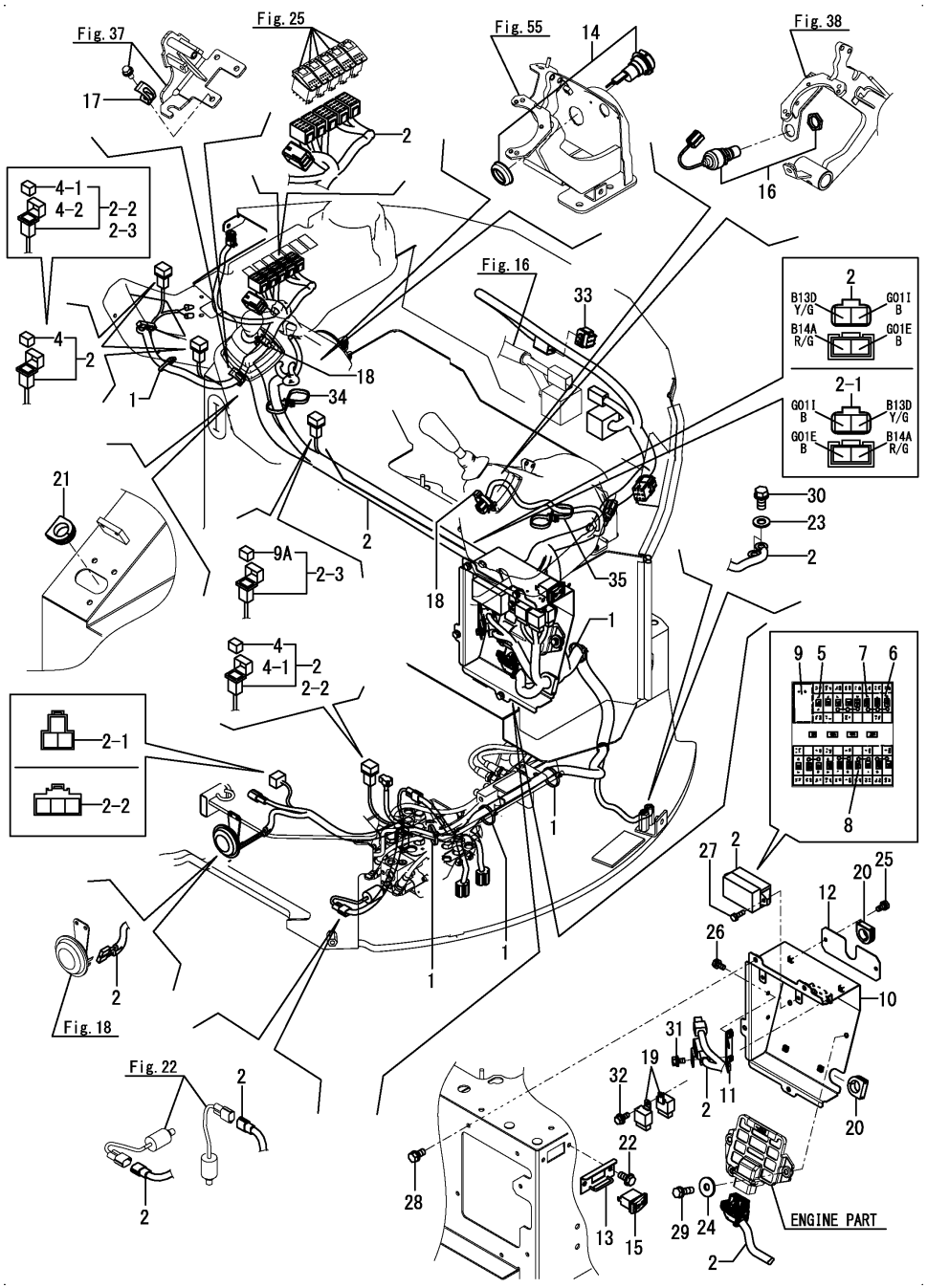




(A)=VIO30-6B P(KR) (D)=
(B)= (E)=
(C)= (F)=

| No. | Lev. | Parts No. | Description | Q'ty (A) | (B) | (C) | (D) | (E) | (F) | I | R |
|---|---|---|---|---|---|---|---|---|---|---|---|
| | | (A=*2017.10.) | | | | | | | | | |
| 35 | 1 | 172187-78580 | BAND, BINDING W 397 | 1 | | | | | | W | |
| | | (A=MBF150) | | | | | | | | | |

N:Old ⇔ New, Q:Old ⇔ New, R:Old ⇔ New, S:Old ⇔ New, W:Add, Z:Discontinued, F:Interchangeable by set, K:Q'ty Change

Copyright (C) YANMAR GLOBAL CS CO., LTD. All RightsReserved.

# Fig.20. ELECTRIC PARTS(GUIDE HARNESS)



(A)=VIO30-6B P(KR)
(B)=
(C)=
(D)=
(E)=
(F)=

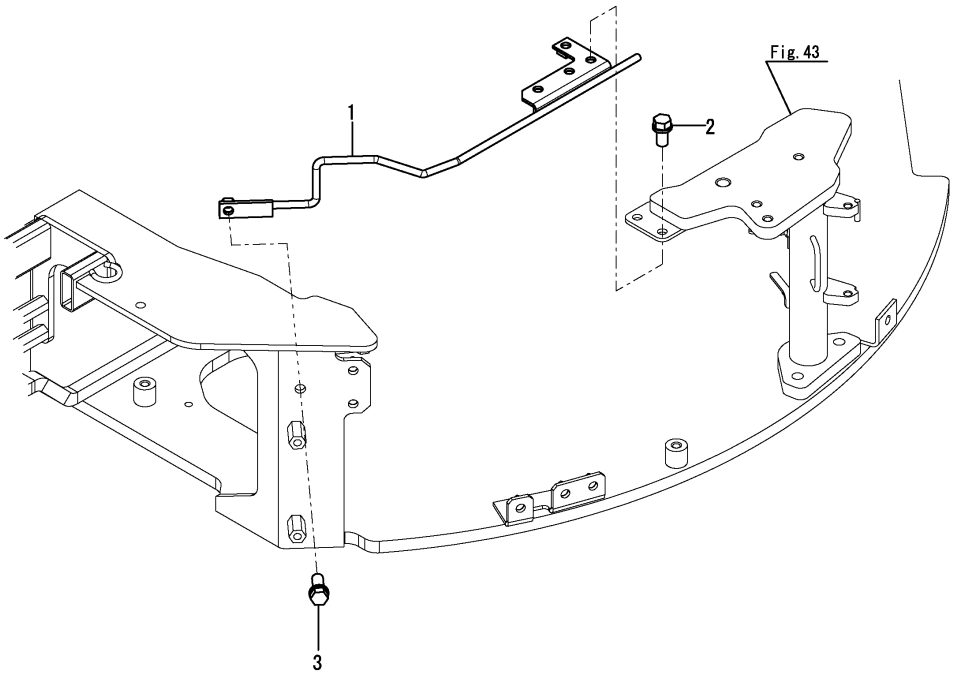


| No. | Lev. | Parts No. | Description | Q'ty (A) | (B) | (C) | (D) | (E) | (F) | I | R |
|---|---|---|---|---|---|---|---|---|---|---|---|
| 1 | 1 | 172B03-16950 | GUIDE ASSY, HARNESS | 1 | | | | | | | |
| 2 | 1 | 26013-100202 | BOLT, M10X 20 | 2 | | | | | | | |
| 3 | 1 | 26013-100252 | BOLT, M10X 25 | 1 | | | | | | | |

N:Old $\overset{\text{Yes}}{\underset{\text{No}}{\rightleftarrows}}$ New, Q:Old $\overset{\text{No}}{\underset{\text{Yes}}{\rightleftarrows}}$ New, R:Old $\overset{\text{Yes}}{\underset{\text{Yes}}{\rightleftarrows}}$ New, S:Old $\overset{\text{No}}{\underset{\text{No}}{\rightleftarrows}}$ New, W:Add, Z:Discontinued, F:Interchangeable by set, K:Q'ty Change

Copyright (C) YANMAR GLOBAL CS CO., LTD. All RightsReserved.

# Fig.21. ELECTRIC PARTS(STARTER)

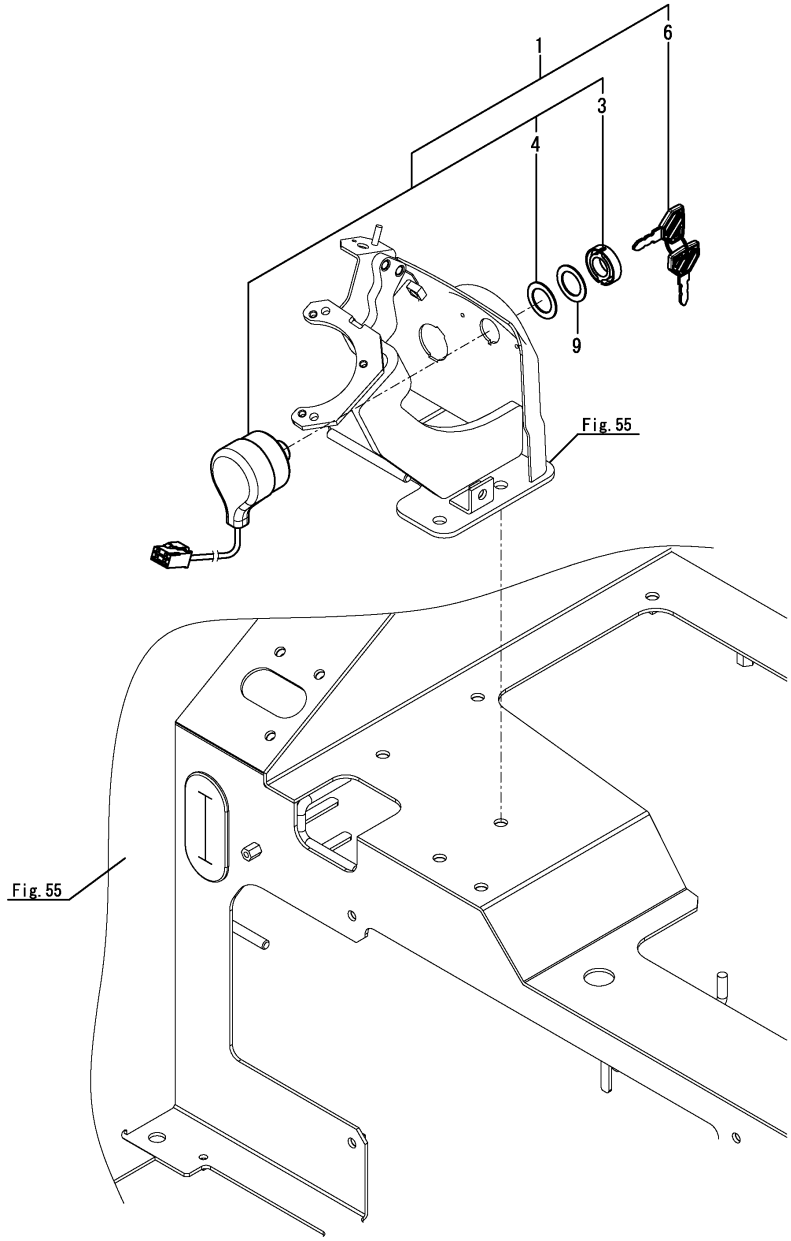




(A)=VIO30-6B P(KR)
(B)=
(C)=
(D)=
(E)=
(F)=

| No. | Lev. | Parts No. | Description | Q'ty (A) | (B) | (C) | (D) | (E) | (F) | I | R |
|---|---|---|---|---|---|---|---|---|---|---|---|
| 1 | 1 | 194940-52110 | SWITCH, STARTING | 1 | | | | | | | |
| 3 | 3 | 198360-52320 | NUT, RING | 1 | | | | | | | |
| 4 | 3 | 198360-52330 | WASHER | 1 | | | | | | | |
| 6 | 2 | 198360-52160 | KEY ASSY, SPARE | 1 | | | | | | | |
| 9 | 1 | 172B03-44400 | WASHER, 20.2X32X1 | 1 | | | | | | W | |
| | (A=MBF067) | | | | | | | | | | |
| 9-1 | 1 | 172B03-44500 | WASHER, STARTER SW | 1 | | | | | | N | |
| | (A=MBF576) | | | | | | | | | | |

N:Old $\overset{\text{Yes}}{\underset{\text{No}}{\rightleftarrows}}$ New, Q:Old $\overset{\text{No}}{\underset{\text{Yes}}{\rightleftarrows}}$ New, R:Old $\overset{\text{Yes}}{\underset{\text{Yes}}{\rightleftarrows}}$ New, S:Old $\overset{\text{No}}{\underset{\text{No}}{\rightleftarrows}}$ New, W:Add, Z:Discontinued, F:Interchangeable by set, K:Q'ty Change

Copyright (C) YANMAR GLOBAL CS CO., LTD. All RightsReserved.

# Fig.143. (21A)ELECTRIC PART(STARTER)(MULTI KIND OF KEY)



(A)=VIO30-6B P(KR)
(B)=
(C)=
(D)=
(E)=
(F)=

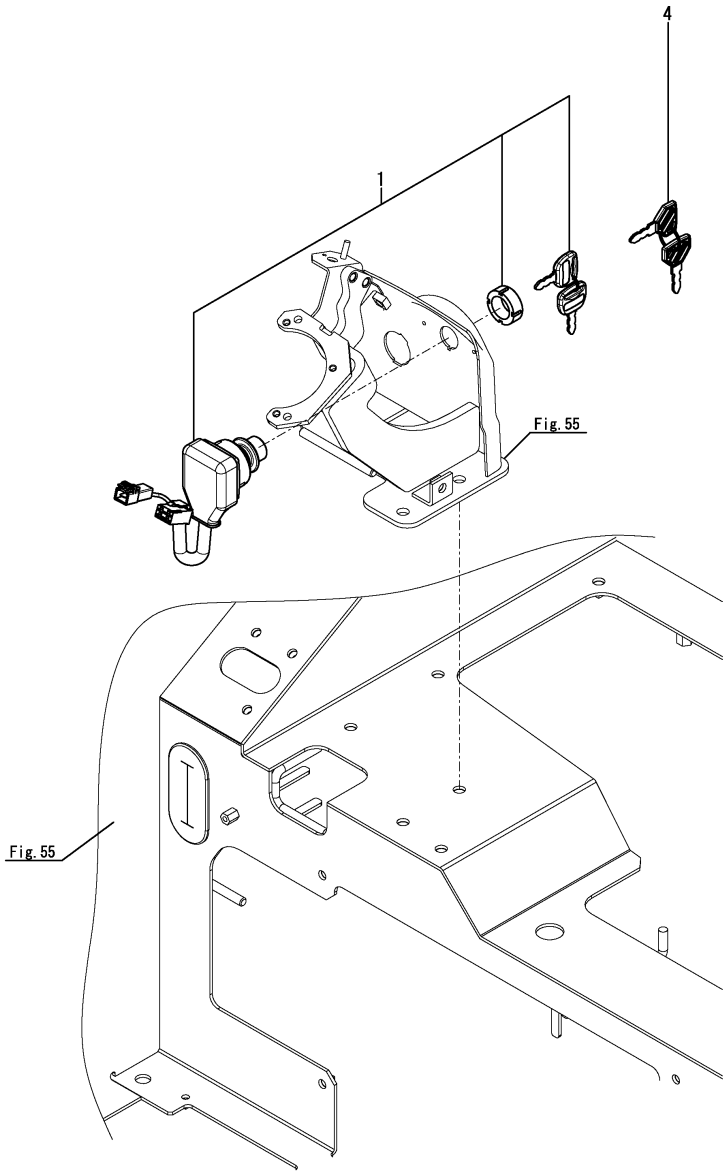


| No. | Lev. | Parts No. | Description | Q'ty (A) | (B) | (C) | (D) | (E) | (F) | I | R |
|---|---|---|---|---|---|---|---|---|---|---|---|
| 1 | 1 | 1A7180-52111 | SWITCH ASSY, STARTER | 1 | | | | | | | 1 |
| 4 | 1 | 198360-52160 | KEY ASSY, SPARE | 1 | | | | | | | 2 |

Remarks
(1)Engine start only.
(2)For bonnet, door.

N:Old $\overset{\text{Yes}}{\underset{\text{No}}{\rightleftarrows}}$ New, Q:Old $\overset{\text{No}}{\underset{\text{Yes}}{\rightleftarrows}}$ New, R:Old $\overset{\text{Yes}}{\underset{\text{Yes}}{\rightleftarrows}}$ New, S:Old $\overset{\text{No}}{\underset{\text{No}}{\rightleftarrows}}$ New, W:Add, Z:Discontinued, F:Interchangeable by set, K:Q'ty Change

Copyright (C) YANMAR GLOBAL CS CO., LTD. All RightsReserved.

# Fig.22. ELECTRIC PARTS(A/D)



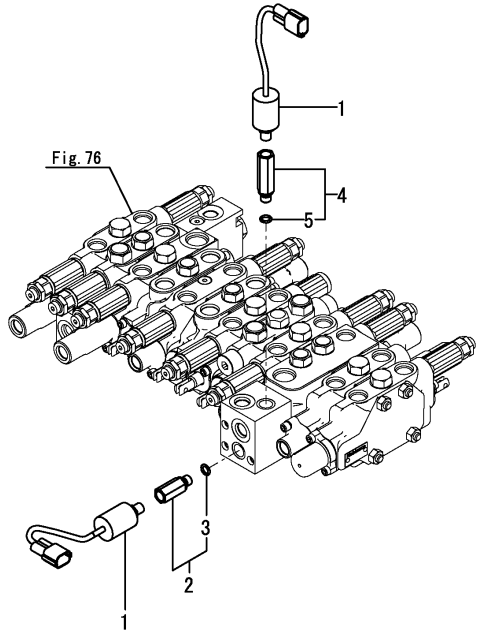


(A)=VIO30-6B P(KR)
(B)=
(C)=
(D)=
(E)=
(F)=

| No. | Lev. | Parts No. | Description | Q'ty (A) | (B) | (C) | (D) | (E) | (F) | I | R |
|---|---|---|---|---|---|---|---|---|---|---|---|
| 1 | 1 | 172478-17201 | SWITCH, PRESSURE | 2 | | | | | | | |
| 2 | 1 | 172A47-76111 | CONNECTOR, G1/8XR1/8 | 1 | | | | | | | |
| 3 | 2 | 24315-000080 | O-RING, 1BP8.0 | 1 | | | | | | | |
| 4 | 1 | 172A79-76110 | CONNECTOR, G1/8XR1/8 | 1 | | | | | | | |
| 5 | 2 | 24315-000080 | O-RING, 1BP8.0 | 1 | | | | | | | |

N:Old $\overset{\text{Yes}}{\underset{\text{No}}{\rightleftarrows}}$ New, Q:Old $\overset{\text{No}}{\underset{\text{Yes}}{\rightleftarrows}}$ New, R:Old $\overset{\text{Yes}}{\underset{\text{Yes}}{\rightleftarrows}}$ New, S:Old $\overset{\text{No}}{\underset{\text{No}}{\rightleftarrows}}$ New, W:Add, Z:Discontinued, F:Interchangeable by set, K:Q'ty Change

Copyright (C) YANMAR GLOBAL CS CO., LTD. All RightsReserved.

# Fig.23. ELECTRIC PARTS(QUICK COUPLER : SWITCH BOX)

(A)=VIO30-6B P(KR)
(B)=
(C)=
(D)=
(E)=
(F)=

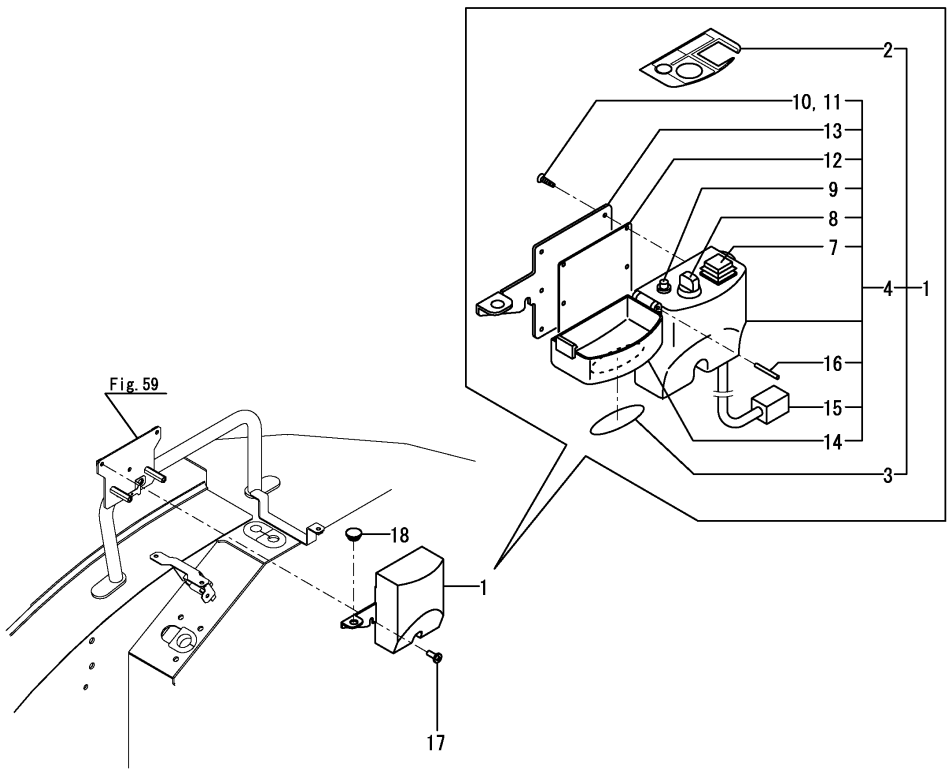


| No. | Lev. | Parts No. | Description | Q'ty (A) | (B) | (C) | (D) | (E) | (F) | I | R |
|---|---|---|---|---|---|---|---|---|---|---|---|
| 1 | 1 | 172958-17110 | BOX, SWITCH | 1 | | | | | | | |
| 2 | 2 | 172472-03290 | LABEL, SWITCH | 1 | | | | | | | |
| 3 | 2 | 172472-03300 | LABEL, COVER | 1 | | | | | | | |
| 4 | 2 | 172958-17101 | BOX, SWITCH | 1 | | | | | | | |
| 7 | 3 | 172958-17140 | SWITCH ASSY | 1 | | | | | | | |
| 8 | 3 | 172958-17150 | SWITCH ASSY, CONTROL | 1 | | | | | | | |
| 9 | 3 | 172958-17160 | LAMP, INDICATOR | 1 | | | | | | | |
| 10 | 3 | 172958-17170 | SCREW, TAPPING | 6 | | | | | | | |
| 11 | 3 | 172958-17180 | SCREW, TAPPING | 2 | | | | | | | |
| 12 | 3 | 172958-17190 | PACKING | 1 | | | | | | | |
| 13 | 3 | 172958-17200 | BRACKET | 1 | | | | | | | |
| 14 | 3 | 172958-17210 | CASE, UPPER | 1 | | | | | | | |
| 15 | 3 | 172958-17220 | CORD, CP 4P | 1 | | | | | | | |
| 16 | 3 | 22351-030028 | PIN, SPRING 3.0X28 | 1 | | | | | | | |
| 17 | 1 | 172137-46210 | SCREW, BIND | 3 | | | | | | | |
| 18 | 1 | 172187-64900 | PLUG | 1 | | | | | | | |

N:Old $\overset{\text{Yes}}{\underset{\text{No}}{\rightleftarrows}}$ New, Q:Old $\overset{\text{No}}{\underset{\text{Yes}}{\rightleftarrows}}$ New, R:Old $\overset{\text{Yes}}{\underset{\text{Yes}}{\rightleftarrows}}$ New, S:Old $\overset{\text{No}}{\underset{\text{No}}{\rightleftarrows}}$ New, W:Add, Z:Discontinued, F:Interchangeable by set, K:Q'ty Change

Copyright (C) YANMAR GLOBAL CS CO., LTD. All RightsReserved.

# Fig.24. ELECTRIC PARTS(WORK LAMP)



(A)=VIO30-6B P(KR)
(B)=
(C)=
(D)=
(E)=
(F)=

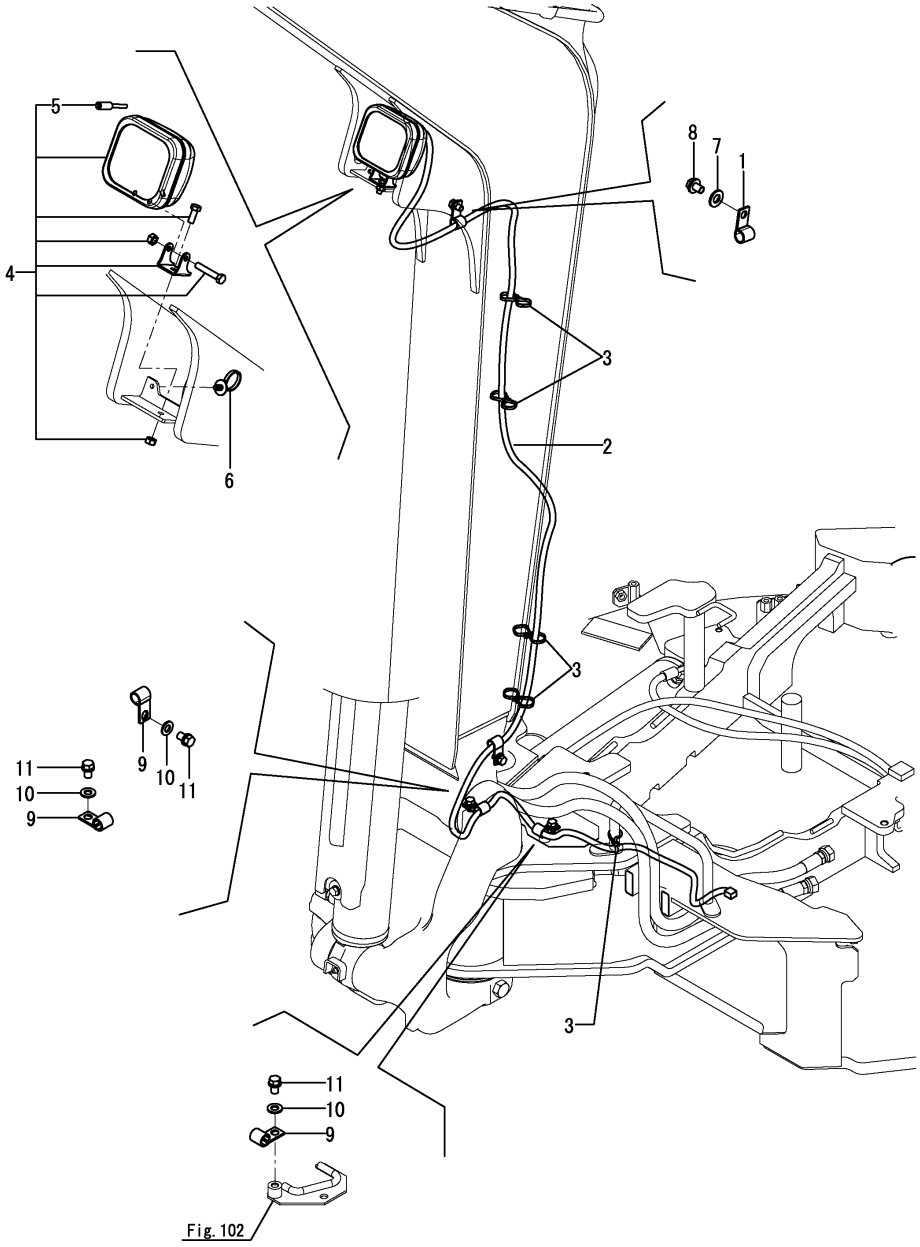


| No. | Lev. | Parts No. | Description | Q'ty (A) | (B) | (C) | (D) | (E) | (F) | I | R |
|---|---|---|---|---|---|---|---|---|---|---|---|
| 1 | 1 | 172B03-16130 | CLAMP, WRC15-11 | 1 | | | | | | | |
| 2 | 1 | 172B03-16550 | HARNESS, WORK LAMP | 1 | | | | | | | |
| 3 | 1 | 172137-16560 | BAND, BINDING W | 5 | | | | | | | |
| 4 | 1 | 172B03-17460 | LAMP ASSY, WORK | 1 | | | | | | | |
| 5 | 2 | 172B03-17470 | BULB, 12V 55W | 1 | | | | | | | |
| 6 | 1 | 1E8915-84120 | CLAMP, BAND C | 1 | | | | | | | |
| 7 | 1 | 22137-100000 | WASHER, 10 | 1 | | | | | | | |
| 8 | 1 | 26013-100162 | BOLT, M10X 16 | 1 | | | | | | | |
| 9 | 1 | 172B03-16130 | CLAMP, WRC15-11 | 3 | | | | | | | |
| 10 | 1 | 22137-100000 | WASHER, 10 | 3 | | | | | | | |
| 11 | 1 | 26013-100162 | BOLT, M10X 16 | 3 | | | | | | | |

N:Old $\overset{\text{Yes}}{\underset{\text{No}}{\leftrightarrows}}$ New, Q:Old $\overset{\text{No}}{\underset{\text{Yes}}{\leftrightarrows}}$ New, R:Old $\overset{\text{Yes}}{\underset{\text{Yes}}{\leftrightarrows}}$ New, S:Old $\overset{\text{No}}{\underset{\text{No}}{\leftrightarrows}}$ New, W:Add, Z:Discontinued, F:Interchangeable by set, K:Q'ty Change

Copyright (C) YANMAR GLOBAL CS CO., LTD. All RightsReserved.

# Fig.119. (24A)ELECTRIC PARTS(FRONT LAMP)(FROM M60544)



(A)=VIO30-6B P(KR)
(B)=
(C)=
(D)=
(E)=
(F)=

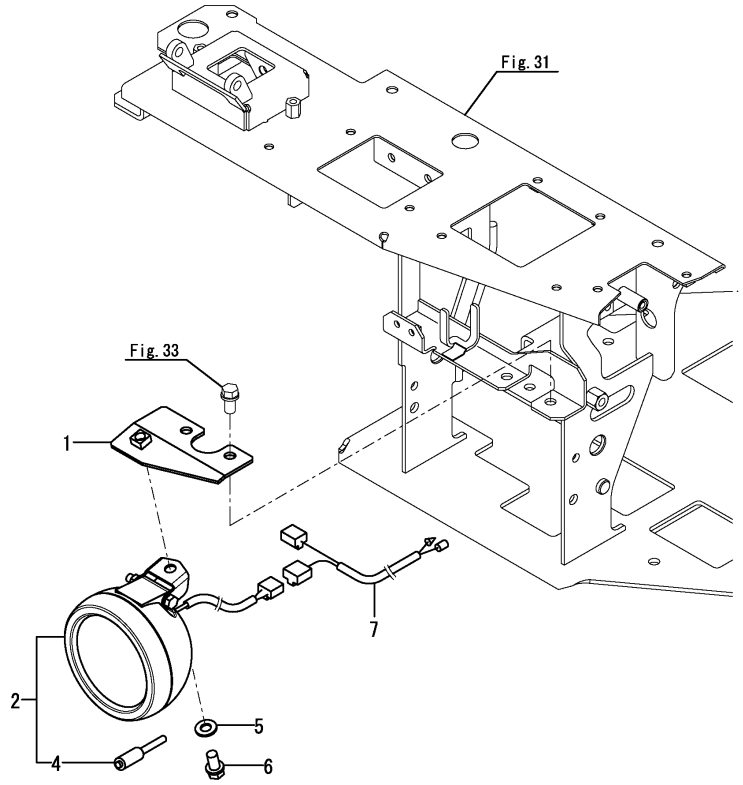


| No. | Lev. | Parts No. | Description | Q'ty (A) | (B) | (C) | (D) | (E) | (F) | I | R |
|---|---|---|---|---|---|---|---|---|---|---|---|
| 1 | 1 | 172B04-17920 | STAY ASSY, LAMP | 1 | | | | | | | |
| 2 | 1 | 1A7611-86251 | LAMP, WORK 55W | 1 | | | | | | | |
| 4 | 2 | 1A7611-86270 | BULB, 12V-55W | 1 | | | | | | | |
| 5 | 1 | 22137-100000 | WASHER, 10 | 1 | | | | | | | |
| 6 | 1 | 26013-100202 | BOLT, M10X 20 | 1 | | | | | | | |
| 7 | 1 | 172B03-16641 | HARNESS, LAMP A | 1 | | | | | | Z | |

(A=M60544)

N:Old $\overset{\text{Yes}}{\underset{\text{No}}{\rightleftarrows}}$ New, Q:Old $\overset{\text{No}}{\underset{\text{Yes}}{\rightleftarrows}}$ New, R:Old $\overset{\text{Yes}}{\underset{\text{Yes}}{\rightleftarrows}}$ New, S:Old $\overset{\text{No}}{\underset{\text{No}}{\rightleftarrows}}$ New, W:Add, Z:Discontinued, F:Interchangeable by set, K:Q'ty Change

Copyright (C) YANMAR GLOBAL CS CO., LTD. All RightsReserved.

# Fig.25. ELECTRIC PARTS(INSTRUMENT PANEL)



(A)=VIO30-6B P(KR)
(B)=
(C)=
(D)=
(E)=
(F)=

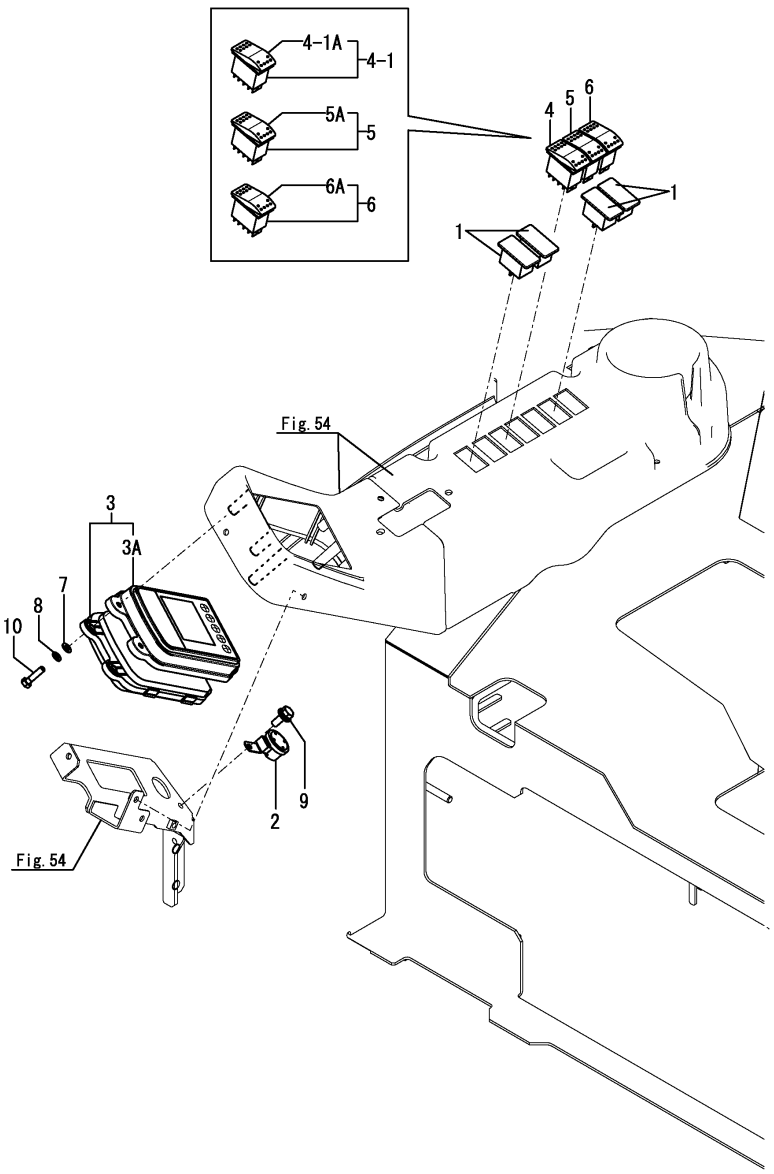


| No. | Lev. | Parts No. | Description | Q'ty (A) | (B) | (C) | (D) | (E) | (F) | I | R |
|---|---|---|---|---|---|---|---|---|---|---|---|
| 1 | 1 | 172538-17100 | PLUG, PANEL | 4 | | | | | | | |
| 2 | 1 | 172141-17150 | BUZZER | 1 | | | | | | | |
| 3 | 1 | 172B03-17250 | MONITOR ASSY | 1 | | | | | | | |
| 3-1 | 1 | 172B03-17251 | MONITOR ASSY | 1 | | | | | | | N |
| | (A=M60515) | | | | | | | | | | |
| 3-2 | 1 | 172B03-17252 | MONITOR ASSY | 1 | | | | | | | N |
| | (A=M60519) | | | | | | | | | | |
| 3-3 | 1 | 172B03-17253 | MONITOR ASSY | 1 | | | | | | | N |
| | (A=M60676) | | | | | | | | | | |
| 3-4 | 1 | 172B03-17259 | MONITOR ASSY | 1 | | | | | | | N |
| | (A=MBF329) | | | | | | | | | | |
| 3A | 2 | 172B03-17260 | MONITOR ASSY, UPPER | 1 | | | | | | | W |
| | (A=M60505) | | | | | | | | | | |
| 3A-1 | 2 | 172B03-17261 | MONITOR ASSY, UPPER | 1 | | | | | | | S |
| | (A=M60676) | | | | | | | | | | |
| 4 | 1 | 172B03-17300 | SWITCH, LIGHT | 1 | | | | | | | |
| 4-1 | 1 | 172B03-17301 | SWITCH, LIGHT | 1 | | | | | | | N |
| | (A=M60539) | | | | | | | | | | |
| 4-1A | 2 | 172B03-17350 | COVER, SWITCH LIGHT | 1 | | | | | | | |
| 5 | 1 | 172B03-17310 | SWITCH, ECO | 1 | | | | | | | |
| 5A | 2 | 172B03-17360 | COVER, SWITCH ECO | 1 | | | | | | | |
| 6 | 1 | 172B03-17320 | SWITCH, AUTO DECEL | 1 | | | | | | | |
| 6A | 2 | 172B03-17370 | COVER, SWITCH | 1 | | | | | | | |
| 7 | 1 | 22137-050000 | WASHER, 5 | 4 | | | | | | | |
| 8 | 1 | 22217-050000 | WASHER, SPRING 5 | 4 | | | | | | | |
| 9 | 1 | 26014-060162 | BOLT, M6X 16 | 1 | | | | | | | |
| 10 | 1 | 26116-050202 | BOLT, M5X 20 PLATED | 4 | | | | | | | |

N:Old $\overset{\text{Yes}}{\underset{\text{No}}{\rightleftarrows}}$ New, Q:Old $\overset{\text{No}}{\underset{\text{Yes}}{\rightleftarrows}}$ New, R:Old $\overset{\text{Yes}}{\underset{\text{Yes}}{\rightleftarrows}}$ New, S:Old $\overset{\text{No}}{\underset{\text{No}}{\rightleftarrows}}$ New, W:Add, Z:Discontinued, F:Interchangeable by set, K:Q'ty Change

Copyright (C) YANMAR GLOBAL CS CO., LTD. All RightsReserved.

# Fig.144. (25A)TRAVEL ALARM



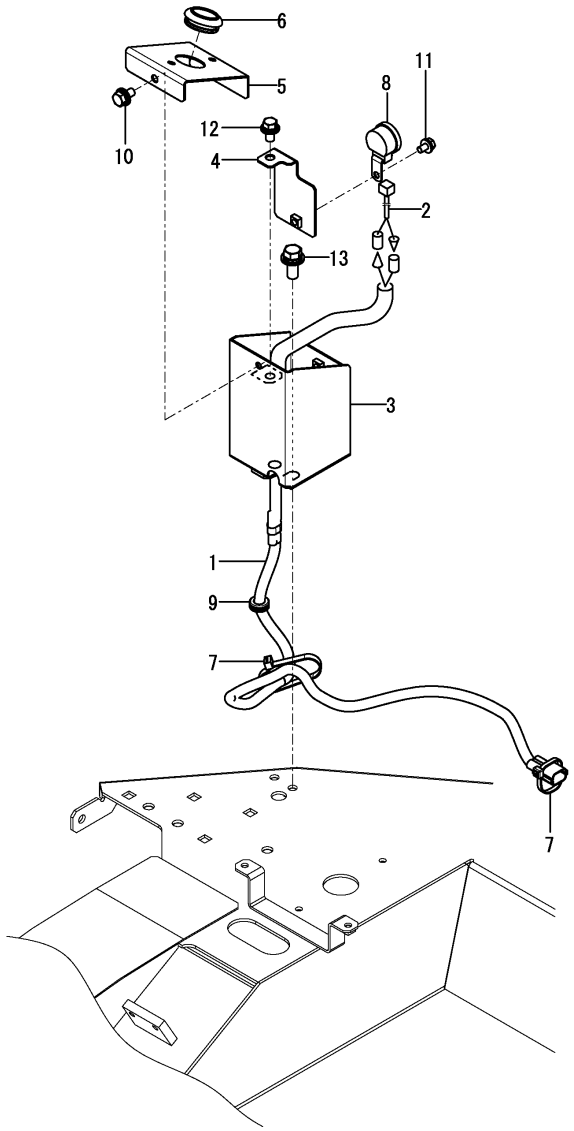


(A)=VIO30-6B P(KR)
(B)=
(C)=
(D)=
(E)=
(F)=

| No. | Lev. | Parts No. | Description | Q'ty (A) | (B) | (C) | (D) | (E) | (F) | I | R |
|---|---|---|---|---|---|---|---|---|---|---|---|
| 1 | 1 | 172B03-16560 | HARNESS, BUZZER | 1 | | | | | | | |
| 2 | 1 | 172B03-16570 | HARNESS, BUZZER | 1 | | | | | | | |
| 3 | 1 | 172B03-16740 | BRACKET ASSY, BUZZER | 1 | | | | | | | |
| 4 | 1 | 172B03-16760 | BRACKET ASSY | 1 | | | | | | | |
| 5 | 1 | 172B03-16890 | PLATE, TRAVEL BUZZER | 1 | | | | | | | |
| 6 | 1 | 172456-53700 | GROMMET, 30 | 1 | | | | | | | |
| 7 | 1 | 194202-56460 | BAND, BINDING 200 | 2 | | | | | | | |
| 8 | 1 | 198071-57110 | BUZZER, BACK | 1 | | | | | | | |
| 9 | 1 | 172162-61850 | GROMMET | 1 | | | | | | | |
| 10 | 1 | 26014-060122 | BOLT, M6X 12 | 2 | | | | | | | |
| 11 | 1 | 26014-060162 | BOLT, M6X 16 | 1 | | | | | | | |
| 12 | 1 | 26014-080162 | BOLT, M8X 16 | 1 | | | | | | | |
| 13 | 1 | 26014-080202 | BOLT, M8X 20 | 2 | | | | | | | |

N:Old $\overset{\text{Yes}}{\underset{\text{No}}{\rightleftarrows}}$ New, Q:Old $\overset{\text{No}}{\underset{\text{Yes}}{\rightleftarrows}}$ New, R:Old $\overset{\text{Yes}}{\underset{\text{Yes}}{\rightleftarrows}}$ New, S:Old $\overset{\text{No}}{\underset{\text{No}}{\rightleftarrows}}$ New, W:Add, Z:Discontinued, F:Interchangeable by set, K:Q'ty Change

Copyright (C) YANMAR GLOBAL CS CO., LTD. All RightsReserved.

# Fig.26. SPROCKET



(A)=VIO30-6B P(KR)
(B)=
(C)=
(D)=
(E)=
(F)=

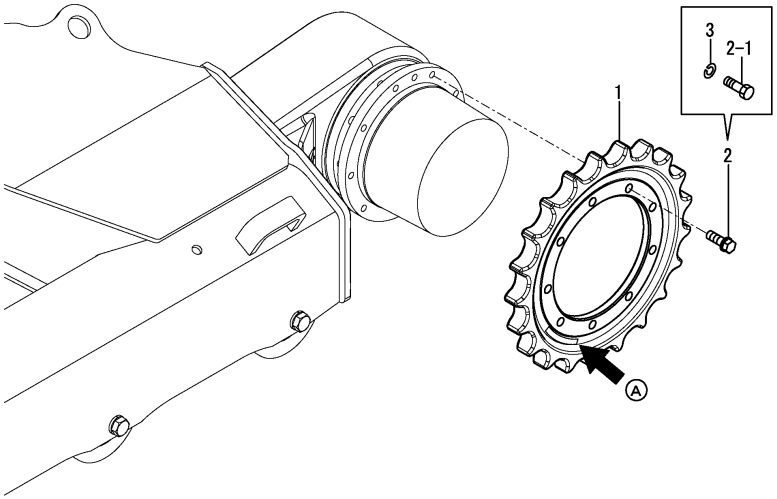


| No. | Lev. | Parts No. | Description | Q'ty (A) | (B) | (C) | (D) | (E) | (F) | I | R |
|---|---|---|---|---|---|---|---|---|---|---|---|
| 1 | 1 | 172141-29111 | SPROCKET | 2 | | | | | | | |
| 1-1 | 1 | 172141-29112 | SPROCKET | 2 | | | | | | N | |
| | (A=M60584) | | | | | | | | | | |
| 2 | 1 | 26013-120352 | BOLT, M12X 35 | 18 | | | | | | | |
| 2-1 | 1 | 172B03-36350 | BOLT, 10.9 M12X35 | 18 | | | | | | S | 1 |
| | (A=MBF227) | | | | | | | | | | |
| 3 | 1 | 22217-120000 | WASHER, SPRING 12 | 18 | | | | | | W | |
| | (A=MBF227) | | | | | | | | | | |

Remarks
* A : There is parts No..
(1)Interchangeable by simultaneous replacement with No.3.

N:Old $\overset{\text{Yes}}{\underset{\text{No}}{\leftrightarrows}}$ New, Q:Old $\overset{\text{No}}{\underset{\text{Yes}}{\leftrightarrows}}$ New, R:Old $\overset{\text{Yes}}{\underset{\text{Yes}}{\leftrightarrows}}$ New, S:Old $\overset{\text{No}}{\underset{\text{No}}{\leftrightarrows}}$ New, W:Add, Z:Discontinued, F:Interchangeable by set, K:Q'ty Change

Copyright (C) YANMAR GLOBAL CS CO., LTD. All RightsReserved.

# Fig.27. IDLER & ADJUST



(A)=VIO30-6B P(KR)
(B)=
(C)=
(D)=
(E)=
(F)=

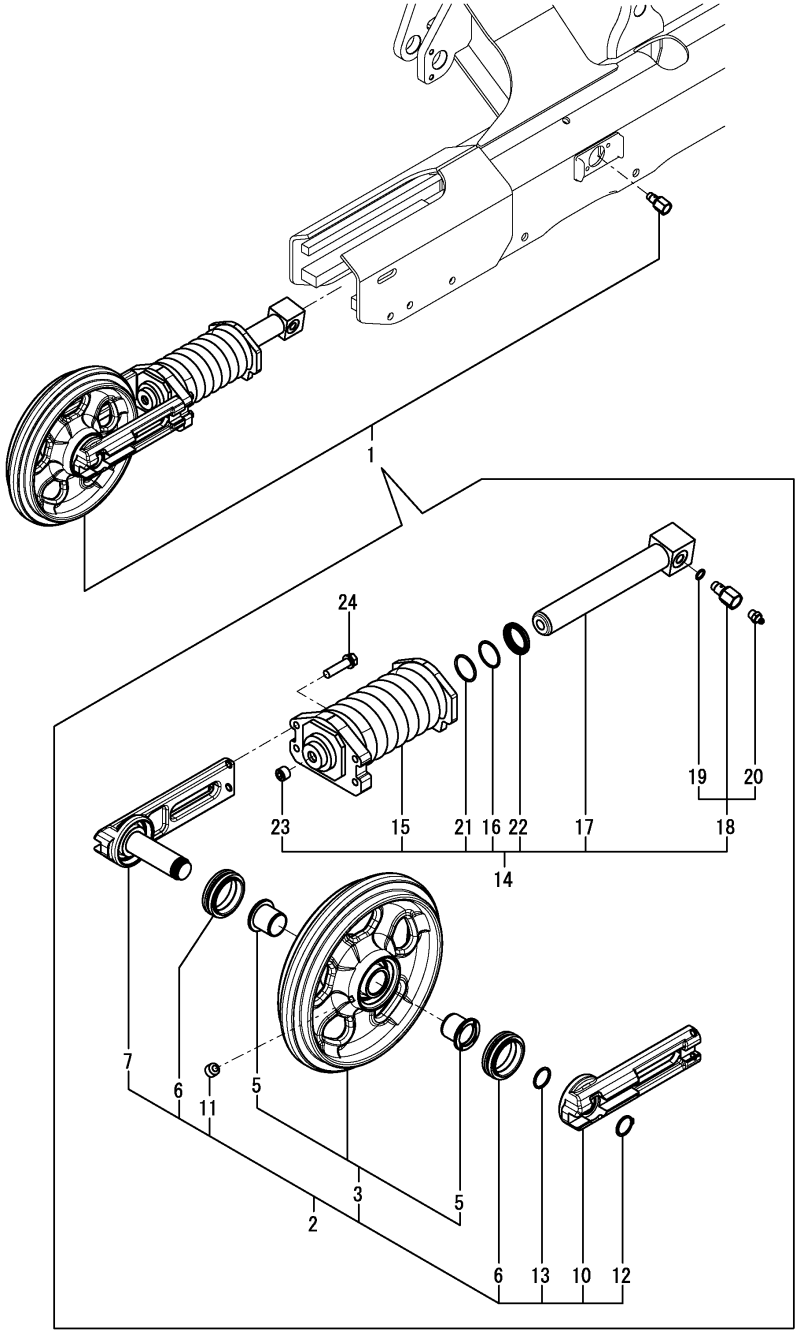


| No. | Lev. | Parts No. | Description | Q'ty (A) | (B) | (C) | (D) | (E) | (F) | I | R |
|---|---|---|---|---|---|---|---|---|---|---|---|
| 1 | 1 | 172B03-37100 | IDLER ASSY, ADJUST | 2 | | | | | | | |
| 2 | 2 | 172B03-37110 | IDLER ASSY, RUBBER | 2 | | | | | | | |
| 3 | 3 | 172458-37102 | IDLER ASSY, 295 | 2 | | | | | | | |
| 5 | 4 | 172A77-37370 | BUSH | 4 | | | | | | | |
| 6 | 3 | 172458-37120 | SEAL, FLOATING | 4 | | | | | | | |
| 7 | 3 | 172458-37131 | SHAFT ASSY, IDLER | 2 | | | | | | | |
| 10 | 3 | 172458-37151 | COVER, CYLINDER B | 2 | | | | | | | |
| 11 | 3 | 194630-42120 | PLUG, SCREW PT1/8 | 2 | | | | | | | |
| 12 | 3 | 22242-000300 | RING, 30 | 2 | | | | | | | |
| 13 | 3 | 24321-000300 | O-RING, 1AG30.0 | 2 | | | | | | | |
| 14 | 2 | 172B03-37700 | ADJUSTER ASSY | 2 | | | | | | | |
| 15 | 3 | 172458-37700 | SPRING ASSY, CRAWLER | 2 | | | | | | | |
| 16 | 3 | 172460-37750 | RING, BACK UP 40 | 2 | | | | | | | |
| 17 | 3 | 172B03-37780 | PISTON ASSY, ADJUST | 2 | | | | | | | |
| 18 | 3 | 172B03-37840 | VALVE ASSY, NIPPLE | 2 | | | | | | | |
| 19 | 4 | 172B03-37850 | SEAL, SQUARE | 2 | | | | | | | |
| 20 | 4 | 24761-020000 | NIPPLE, GREASE PT1/8 | 2 | | | | | | | |
| 21 | 3 | 24325-000400 | O-RING, 1BG40.0 | 2 | | | | | | | |
| 22 | 3 | 933111-23600 | SEAL, OIL DKB4052710 | 2 | | | | | | | |
| 23 | 3 | 933171-13691 | PLUG, PT1/8 | 2 | | | | | | | |
| 24 | 2 | 26013-100402 | BOLT, M10X 40 | 8 | | | | | | | |

N:Old $\overset{\text{Yes}}{\underset{\text{No}}{\leftrightarrows}}$ New, Q:Old $\overset{\text{No}}{\underset{\text{Yes}}{\leftrightarrows}}$ New, R:Old $\overset{\text{Yes}}{\underset{\text{Yes}}{\leftrightarrows}}$ New, S:Old $\overset{\text{No}}{\underset{\text{No}}{\leftrightarrows}}$ New, W:Add, Z:Discontinued, F:Interchangeable by set, K:Q'ty Change

Copyright (C) YANMAR GLOBAL CS CO., LTD. All RightsReserved.

# Fig.28. TRACK ROLLER(Y SPEC.)(TO M60593)

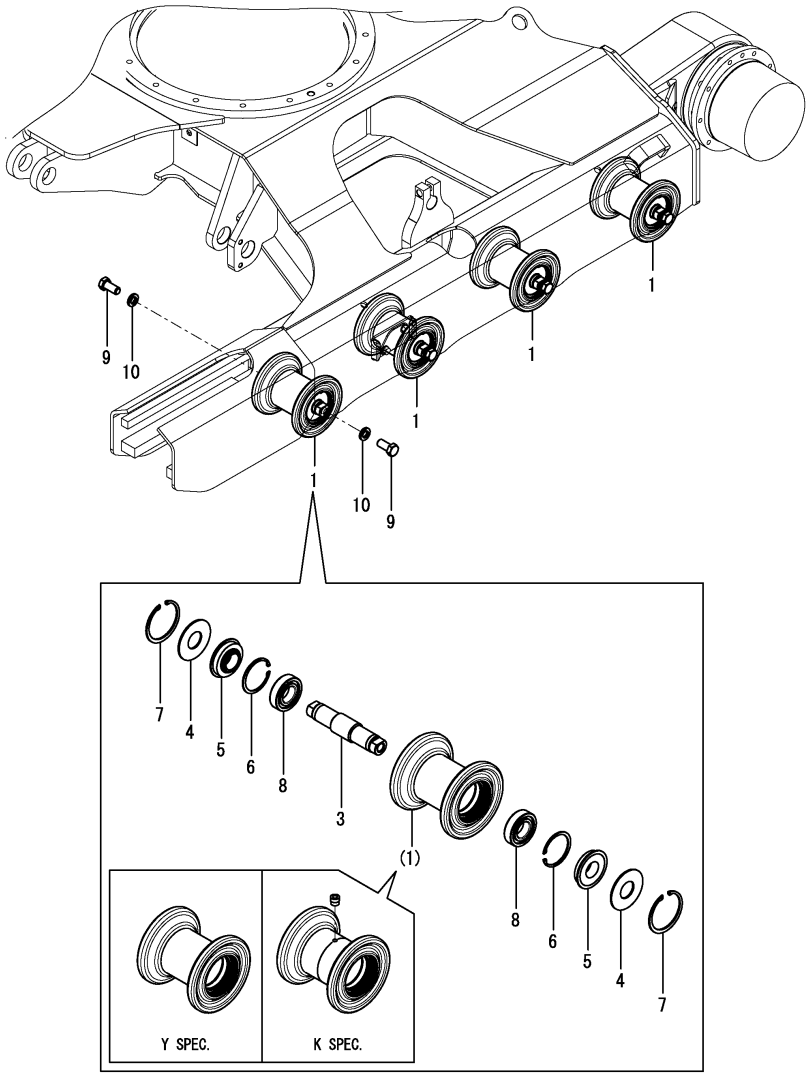


(A)=VIO30-6B P(KR)
(B)=
(C)=
(D)=
(E)=
(F)=

| No. | Lev. | Parts No. | Description | Q'ty (A) | (B) | (C) | (D) | (E) | (F) | I | R |
|---|---|---|---|---|---|---|---|---|---|---|---|
| 1 | 1 | 172441-37302 | ROLLER ASSY, TRUCK | 8 | | | | | | Z | 1 |
| | (A=M60594) | | | | | | | | | | |
| 3 | 2 | 172422-37310 | SHAFT, ROLLER | 8 | | | | | | | |
| 4 | 2 | 172141-37320 | SPACER, 75X2.6 | 16 | | | | | | | |
| 5 | 2 | 1A1030-48250 | SEAL, QLF30621218 | 16 | | | | | | | |
| 6 | 2 | 22252-000620 | RING, 62 | 16 | | | | | | | |
| 7 | 2 | 22252-000750 | RING, 75 | 16 | | | | | | | |
| 8 | 2 | 933111-73800 | BEARING,BALL 6206YR8 | 16 | | | | | | | |
| 9 | 1 | 172490-37320 | BOLT, M16X35 | 16 | | | | | | | |
| 10 | 1 | 22217-160000 | WASHER, SPRING 16 | 16 | | | | | | | |

Remarks
(1)Replacement with Fig.134(28A) No.1.
The inner parts are not compatible.

N:Old $\overset{\text{Yes}}{\underset{\text{No}}{\rightleftarrows}}$ New, Q:Old $\overset{\text{No}}{\underset{\text{Yes}}{\rightleftarrows}}$ New, R:Old $\overset{\text{Yes}}{\underset{\text{Yes}}{\rightleftarrows}}$ New, S:Old $\overset{\text{No}}{\underset{\text{No}}{\rightleftarrows}}$ New, W:Add, Z:Discontinued, F:Interchangeable by set, K:Q'ty Change

Copyright (C) YANMAR GLOBAL CS CO., LTD. All RightsReserved.

# Fig.134. (28A)TRACK ROLLER(K SPEC.)(FROM M60594)

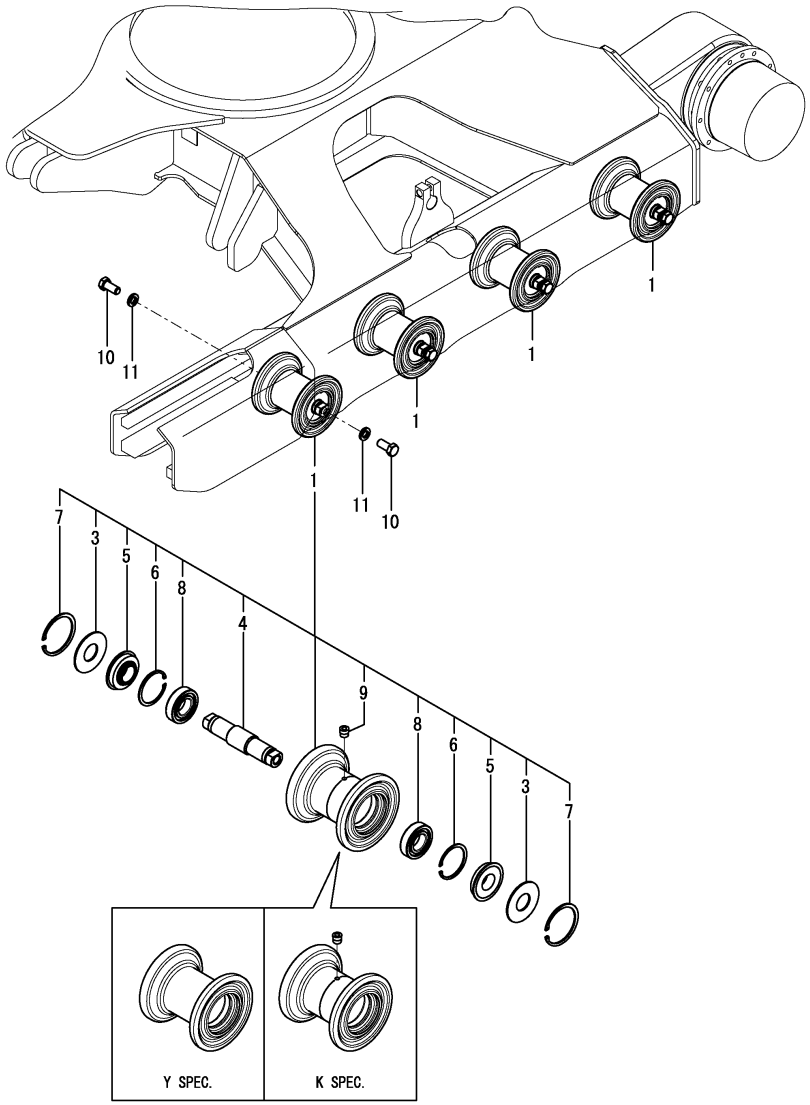


(A)=VIO30-6B P(KR)
(B)=
(C)=
(D)=
(E)=
(F)=

| No. | Lev. | Parts No. | Description | Q'ty (A) | (B) | (C) | (D) | (E) | (F) | I | R |
|---|---|---|---|---|---|---|---|---|---|---|---|
| 1 | 1 (A=M60594) | 172B03-37300 | ROLLER ASSY, LOWER | 8 | | | | | | W | |
| 3 | 2 | 172141-37320 | SPACER, 75X2.6 | 16 | | | | | | | |
| 4 | 2 | 172B03-37320 | SHAFT | 8 | | | | | | | |
| 5 | 2 | 1A1030-48250 | SEAL, QLF30621218 | 16 | | | | | | | |
| 6 | 2 | 22252-000620 | RING, 62 | 16 | | | | | | | |
| 7 | 2 | 22252-000750 | RING, 75 | 16 | | | | | | | |
| 8 | 2 | 24101-062064 | BEARING, BALL 6206 | 16 | | | | | | | |
| 9 | 2 | 933171-13691 | PLUG, PT1/8 | 8 | | | | | | | |
| 10 | 1 | 172490-37320 | BOLT, M16X35 | 16 | | | | | | | |
| 11 | 1 | 22217-160000 | WASHER, SPRING 16 | 16 | | | | | | | |

Remarks
*Track roller(Y spec.) are shown in Fig.28.
The inner parts are not compatible.

N:Old $\overset{\text{Yes}}{\underset{\text{No}}{\rightleftarrows}}$ New, Q:Old $\overset{\text{No}}{\underset{\text{Yes}}{\rightleftarrows}}$ New, R:Old $\overset{\text{Yes}}{\underset{\text{Yes}}{\rightleftarrows}}$ New, S:Old $\overset{\text{No}}{\underset{\text{No}}{\rightleftarrows}}$ New, W:Add, Z:Discontinued, F:Interchangeable by set, K:Q'ty Change

Copyright (C) YANMAR GLOBAL CS CO., LTD. All RightsReserved.

# Fig.29. CARRIER ROLLER



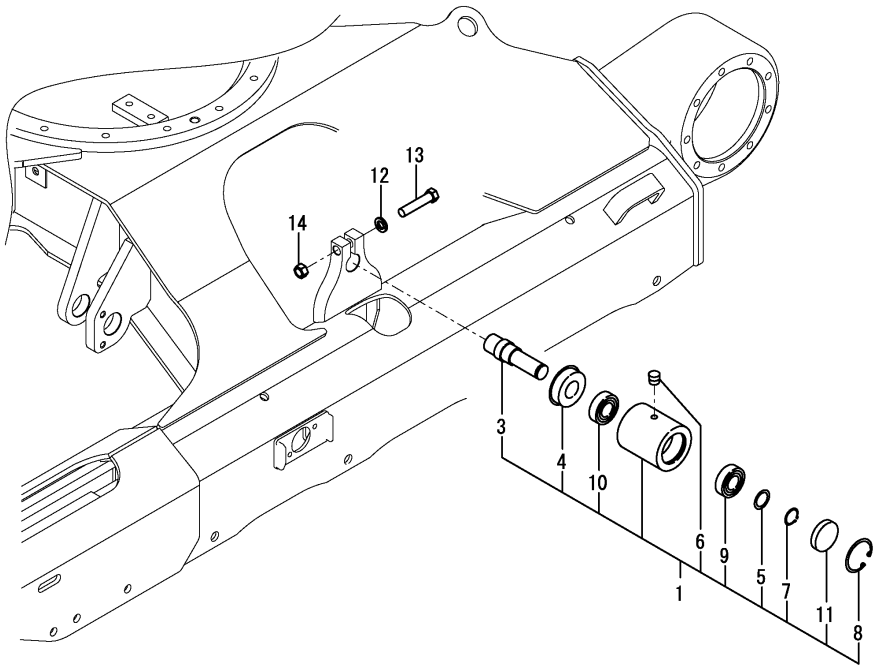


(A)=VIO30-6B P(KR)
(B)=
(C)=
(D)=
(E)=
(F)=

| No. | Lev. | Parts No. | Description | Q'ty (A) | (B) | (C) | (D) | (E) | (F) | I | R |
|---|---|---|---|---|---|---|---|---|---|---|---|
| 1 | 1 | 172458-37500-2 | ROLLER ASSY, CARRIER | 2 | | | | | | | |
| 3 | 2 | 172458-37570 | SHAFT | 2 | | | | | | | |
| 4 | 2 | 172458-37580 | SEAL, OIL | 2 | | | | | | | |
| 5 | 2 | 172458-37590 | COLLAR | 2 | | | | | | | |
| 6 | 2 | 194630-42120 | PLUG, SCREW PT1/8 | 2 | | | | | | | |
| 7 | 2 | 22242-000250 | RING, 25 | 2 | | | | | | | |
| 8 | 2 | 22252-000521 | RING, 52 | 2 | | | | | | | |
| 9 | 2 | 24101-062054 | BEARING, BALL 6205 | 2 | | | | | | | |
| 10 | 2 | 24102-062054 | BEARING, BALL 6205U | 2 | | | | | | | |
| 11 | 2 | 27260-520000 | PLUG, 52 | 2 | | | | | | | |
| 12 | 1 | 22217-140000 | WASHER, SPRING 14 | 2 | | | | | | | |
| 13 | 1 | 26116-140652 | BOLT, M14X 65 PLATED | 2 | | | | | | | |
| 14 | 1 | 26716-140002 | NUT, M14 | 2 | | | | | | | |

N:Old $\overset{\text{Yes}}{\underset{\text{No}}{\leftrightarrows}}$ New, Q:Old $\overset{\text{No}}{\underset{\text{Yes}}{\leftrightarrows}}$ New, R:Old $\overset{\text{Yes}}{\underset{\text{Yes}}{\leftrightarrows}}$ New, S:Old $\overset{\text{No}}{\underset{\text{No}}{\leftrightarrows}}$ New, W:Add, Z:Discontinued, F:Interchangeable by set, K:Q'ty Change

Copyright (C) YANMAR GLOBAL CS CO., LTD. All RightsReserved.

# Fig.30. CRAWLER

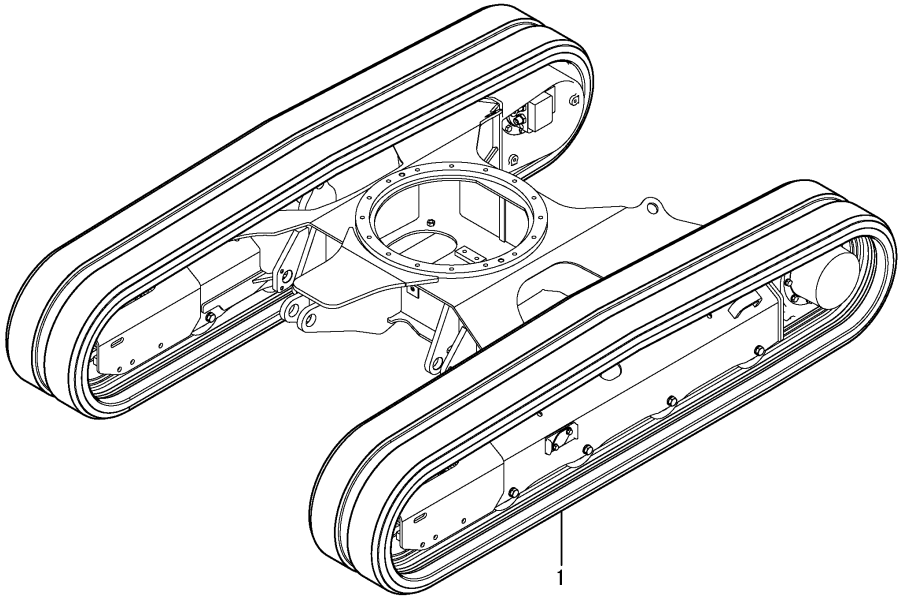




(A)=VIO30-6B P(KR)
(B)=
(C)=
(D)=
(E)=
(F)=

| No. | Lev. | Parts No. | Description | Q'ty (A) | (B) | (C) | (D) | (E) | (F) | I | R |
|---|---|---|---|---|---|---|---|---|---|---|---|
| 1 | 1 | 172B03-38600 | CRAWLER, RUBBER 300 | 2 | | | | | | | |

N:Old ⇄(Yes/No) New, Q:Old ⇄(No/Yes) New, R:Old ⇄(Yes/Yes) New, S:Old ⇄(No/No) New, W:Add, Z:Discontinued, F:Interchangeable by set, K:Q'ty Change

Copyright (C) YANMAR GLOBAL CS CO., LTD. All RightsReserved.

# Fig.31. MOUNT(VALVE)



(A)=VIO30-6B P(KR)
(B)=
(C)=
(D)=
(E)=
(F)=

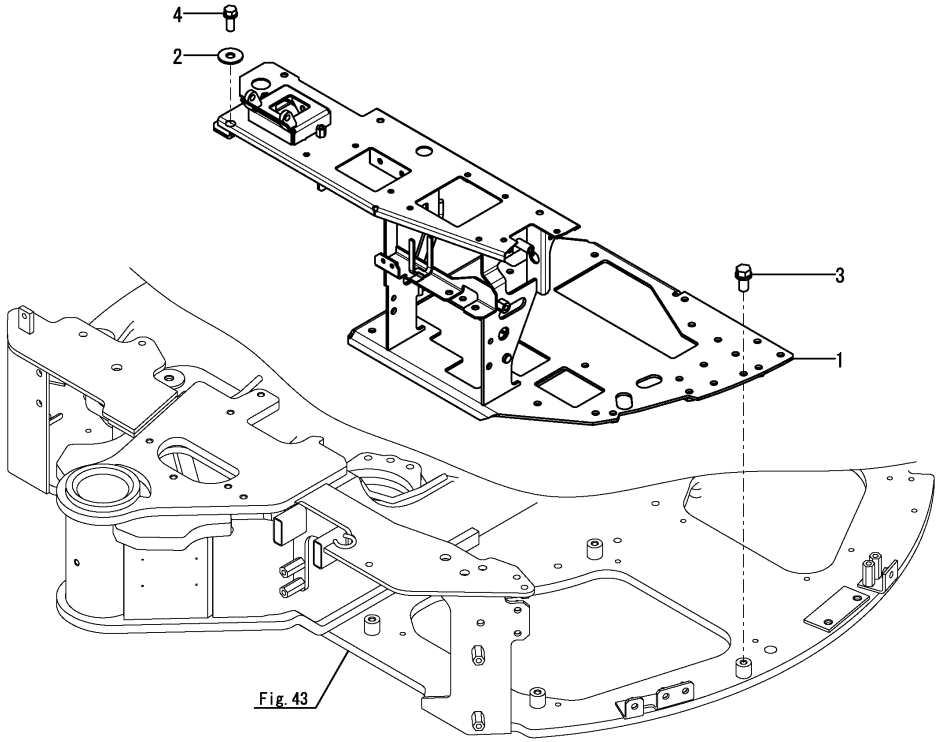


| No. | Lev. | Parts No. | Description | Q'ty (A) | (B) | (C) | (D) | (E) | (F) | I | R |
|---|---|---|---|---|---|---|---|---|---|---|---|
| 1 | 1 | 172B03-45600 | MOUNT ASSY,LINK | 1 | | | | | | | |
| 1-1 | 1 | 172B03-45601 | MOUNT ASSY,LINK | 1 | | | | | | N | |
| | (A=M60525) | | | | | | | | | | |
| 1-2 | 1 | 172B03-45602 | MOUNT ASSY, LINK | 1 | | | | | | N | |
| | (A=M60594) | | | | | | | | | | |
| 2 | 1 | 22157-100000 | WASHER, 10 | 2 | | | | | | | |
| 3 | 1 | 26013-100202 | BOLT, M10X 20 | 4 | | | | | | | |
| 4 | 1 | 26013-100252 | BOLT, M10X 25 | 2 | | | | | | | |

N:Old $\overset{\text{Yes}}{\underset{\text{No}}{\leftrightarrows}}$ New, Q:Old $\overset{\text{No}}{\underset{\text{Yes}}{\leftrightarrows}}$ New, R:Old $\overset{\text{Yes}}{\underset{\text{Yes}}{\leftrightarrows}}$ New, S:Old $\overset{\text{No}}{\underset{\text{No}}{\leftrightarrows}}$ New, W:Add, Z:Discontinued, F:Interchangeable by set, K:Q'ty Change

Copyright (C) YANMAR GLOBAL CS CO., LTD. All RightsReserved.

# Fig.32. CONTROL EQUIPMENT(TRAVEL LEVER)

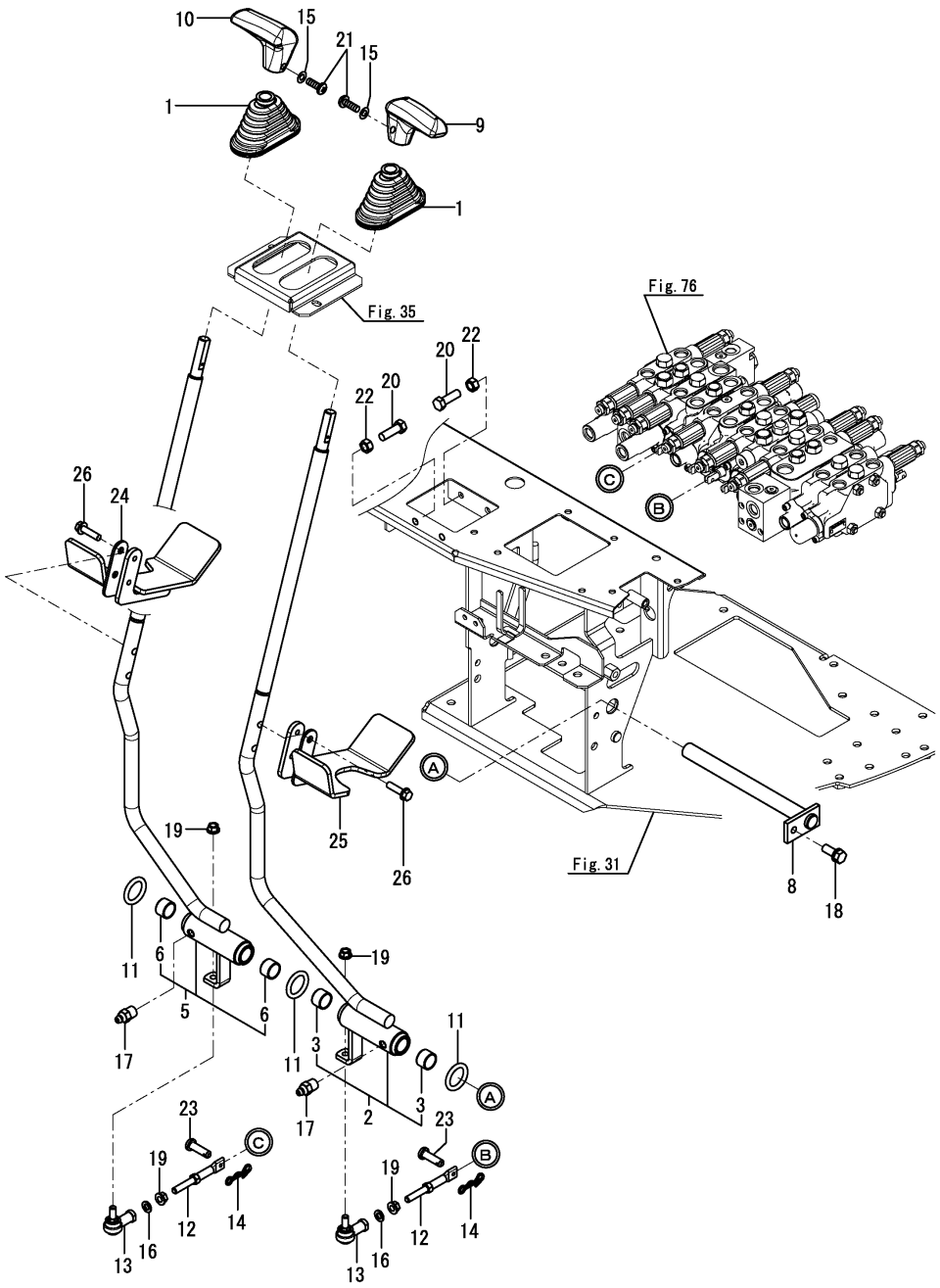


(A)=VIO30-6B P(KR)
(B)=
(C)=
(D)=
(E)=
(F)=

| No. | Lev. | Parts No. | Description | Q'ty (A) | (B) | (C) | (D) | (E) | (F) | I | R |
|---|---|---|---|---|---|---|---|---|---|---|---|
| 1 | 1 | 172141-41340 | BOOT, RUBBER | 2 | | | | | | | |
| 2 | 1 | 172B03-45100 | LEVER ASSY, TRUCK L | 1 | | | | | | | |
| 3 | 2 | 172141-41370 | BUSH, 20 15 | 2 | | | | | | | |
| 5 | 1 | 172B03-45150 | LEVER ASSY, TRUCK R | 1 | | | | | | | |
| 6 | 2 | 172141-41370 | BUSH, 20 15 | 2 | | | | | | | |
| 8 | 1 | 172B03-45400 | SHAFT ASSY | 1 | | | | | | | |
| 9 | 1 | 172187-45870 | GRIP, DRIVE L | 1 | | | | | | | |
| 10 | 1 | 172187-45880 | GRIP, DRIVE R | 1 | | | | | | | |
| 11 | 1 | 172124-46200 | O-RING, 27.6X5.7 | 3 | | | | | | | |
| 12 | 1 | 172124-46340 | ROD ASSY, SPOOL | 2 | | | | | | | |
| 13 | 1 | 172122-46590 | ELBOW, 8 | 2 | | | | | | | |
| 14 | 1 | 1C6281-52310 | PIN, SNAP 6 | 2 | | | | | | | |
| 15 | 1 | 22117-040000 | WASHER, 4 | 2 | | | | | | | |
| 16 | 1 | 22117-080000 | WASHER, 8 | 2 | | | | | | | |
| 17 | 1 | 24761-020000 | NIPPLE, GREASE PT1/8 | 2 | | | | | | | |
| 18 | 1 | 26013-080202 | BOLT, M8X 20 | 1 | | | | | | | |
| 19 | 1 | 26051-080002 | NUT, M8 | 4 | | | | | | | |
| 20 | 1 | 26116-080304 | BOLT, M8X 30 PLATED | 4 | | | | | | | |
| 21 | 1 | 26587-040122 | SCREW, M4X12 | 2 | | | | | | | |
| 22 | 1 | 26716-080002 | NUT, M8 | 4 | | | | | | | |
| 23 | 1 | 933110-54100 | PIN, 4.75X14 | 2 | | | | | | | |
| 24 | 1 | 172B03-44201 | PEDAL ASSY, TRACK R | 1 | | | | | | | |
| 25 | 1 | 172B03-44231 | PEDAL ASSY, TRACK L | 1 | | | | | | | |
| 26 | 1 | 26106-080302 | BOLT, M8X 30 PLATED | 4 | | | | | | | |

N:Old $\overset{\text{Yes}}{\underset{\text{No}}{\rightleftarrows}}$ New, Q:Old $\overset{\text{No}}{\underset{\text{Yes}}{\rightleftarrows}}$ New, R:Old $\overset{\text{Yes}}{\underset{\text{Yes}}{\rightleftarrows}}$ New, S:Old $\overset{\text{No}}{\underset{\text{No}}{\rightleftarrows}}$ New, W:Add, Z:Discontinued, F:Interchangeable by set, K:Q'ty Change

Copyright (C) YANMAR GLOBAL CS CO., LTD. All RightsReserved.

# Fig.33. CONTROL EQUIPMENT(SWING PEDAL)

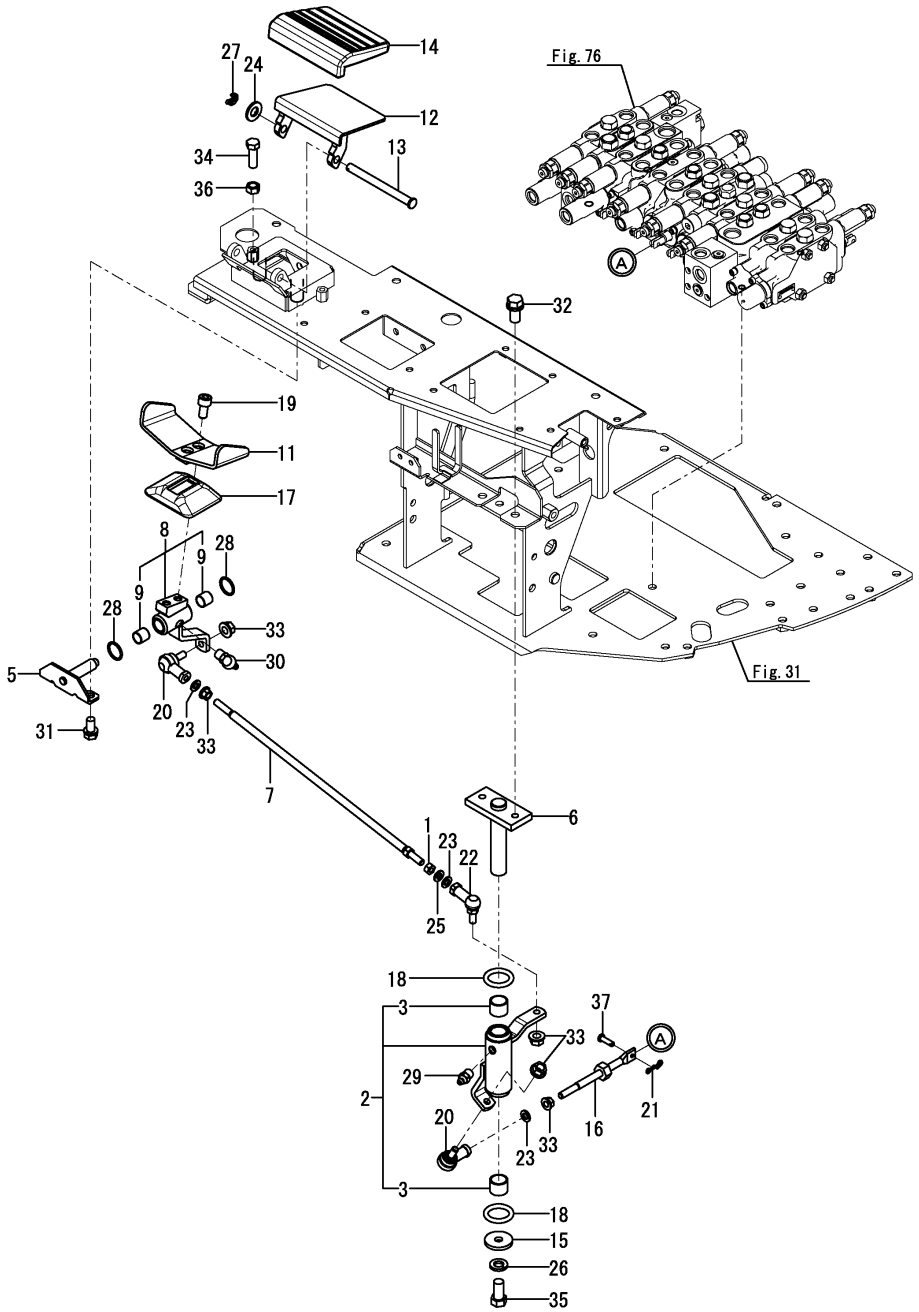


(A)=VIO30-6B P(KR)
(B)=
(C)=
(D)=
(E)=
(F)=

| No. | Lev. | Parts No. | Description | Q'ty (A) | (B) | (C) | (D) | (E) | (F) | I | R |
|---|---|---|---|---|---|---|---|---|---|---|---|
| 1 | 1 | 194200-37780 | NUT, M8 | 1 | | | | | | | |
| 2 | 1 | 172B03-45200 | LINK ASSY, SWING | 1 | | | | | | | |
| 3 | 2 | 172141-41370 | BUSH, 20 15 | 2 | | | | | | | |
| 5 | 1 | 172458-45230-1 | SHAFT ASSY, PEDAL | 1 | | | | | | | |
| 6 | 1 | 172B03-45250 | BRACKET, SWING | 1 | | | | | | | |
| 7 | 1 | 172B03-45300 | ROD ASSY, 420 | 1 | | | | | | | |
| 8 | 1 | 172B03-45320 | LINK ASSY, PEDAL | 1 | | | | | | | |
| 9 | 2 | 172141-41360 | BUSH | 2 | | | | | | | |
| 11 | 1 | 172458-45521-1 | PEDALL ASSY, SWING | 1 | | | | | | | |
| 12 | 1 | 172458-45540-1 | COVER ASSY, PEDAL | 1 | | | | | | | |
| 13 | 1 | 172187-45651 | SHAFT, PEDAL COVER | 1 | | | | | | | |
| 14 | 1 | 172187-45760 | PAD | 1 | | | | | | | |
| 15 | 1 | 1A1040-45890 | WASHER, 10X36X4.5 | 1 | | | | | | | |
| 16 | 1 | 172823-45940 | ROD ASSY, 130 | 1 | | | | | | | |
| 17 | 1 | 172157-45990 | BOOT, PEDAL | 1 | | | | | | | |
| 18 | 1 | 172124-46200 | O-RING, 27.6X5.7 | 2 | | | | | | | |
| 19 | 1 | 172165-46340 | BOLT, HEX SOCKET M8 | 2 | | | | | | | |
| 20 | 1 | 172122-46590 | ELBOW, 8 | 2 | | | | | | | |
| 21 | 1 | 1C6281-52310 | PIN, SNAP 6 | 1 | | | | | | | |
| 22 | 1 | 1E6740-64200 | BALL, LINK BL8DL | 1 | | | | | | | |
| 23 | 1 | 22117-080000 | WASHER, 8 | 3 | | | | | | | |
| 24 | 1 | 22137-100000 | WASHER, 10 | 1 | | | | | | | |
| 25 | 1 | 22217-080000 | WASHER, SPRING 8 | 1 | | | | | | | |
| 26 | 1 | 22217-100000 | WASHER, SPRING 10 | 1 | | | | | | | |
| 27 | 1 | 22417-250200 | PIN, COTTER 2.5X20 | 1 | | | | | | | |
| 28 | 1 | 24311-000210 | O-RING, 1AP21.0 | 2 | | | | | | | |
| 29 | 1 | 24761-020000 | NIPPLE, GREASE PT1/8 | 1 | | | | | | | |
| 30 | 1 | 24761-040000 | NIPPLE, GREASE B | 1 | | | | | | | |
| 31 | 1 | 26013-080162 | BOLT, M8X 16 | 2 | | | | | | | |
| 32 | 1 | 26013-100202 | BOLT, M10X 20 | 2 | | | | | | | |
| 33 | 1 | 26051-080002 | NUT, M8 | 5 | | | | | | | |
| 34 | 1 | 26116-080254 | BOLT, M8X 25 PLATED | 2 | | | | | | | |
| 35 | 1 | 26116-100202 | BOLT, M10X 20 PLATED | 1 | | | | | | | |
| 36 | 1 | 26716-080002 | NUT, M8 | 2 | | | | | | | |
| 37 | 1 | 933110-54100 | PIN, 4.75X14 | 1 | | | | | | | |

N:Old $\overset{\text{Yes}}{\underset{\text{No}}{\rightleftarrows}}$ New, Q:Old $\overset{\text{No}}{\underset{\text{Yes}}{\rightleftarrows}}$ New, R:Old $\overset{\text{Yes}}{\underset{\text{Yes}}{\rightleftarrows}}$ New, S:Old $\overset{\text{No}}{\underset{\text{No}}{\rightleftarrows}}$ New, W:Add, Z:Discontinued, F:Interchangeable by set, K:Q'ty Change

Copyright (C) YANMAR GLOBAL CS CO., LTD. All RightsReserved.

# Fig.34. CONTROL EQUIPMENT(LO-HIGH PEDAL)(TO M60543)

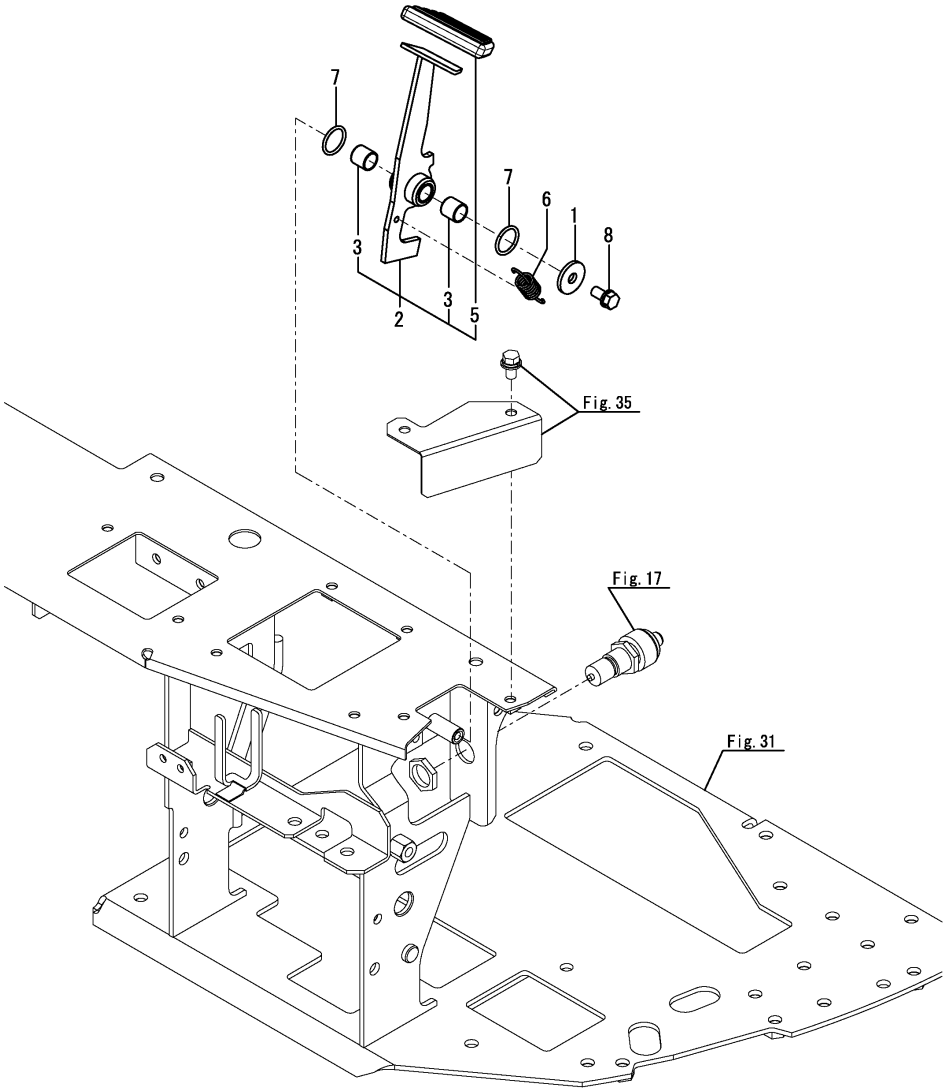


(A)=VIO30-6B P(KR)
(B)=
(C)=
(D)=
(E)=
(F)=

| No. | Lev. | Parts No. | Description | Q'ty (A) | (B) | (C) | (D) | (E) | (F) | I | R |
|---|---|---|---|---|---|---|---|---|---|---|---|
| 1 | 1 | 1A1040-43900 | WASHER, SPRING | 1 | | | | | | | |
| 2 | 1 | 172B03-45500 | PEDAL ASSY, 2ND | 1 | | | | | | | |
| 3 | 2 | 172141-41360 | BUSH | 2 | | | | | | | |
| 5 | 2 | 172458-45950 | PAD, PEDAL | 1 | | | | | | | |
| 6 | 1 | 172A47-45580 | SPRING, 2 SPEED | 1 | | | | | | | |
| 7 | 1 | 24311-000210 | O-RING, 1AP21.0 | 2 | | | | | | | |
| 8 | 1 | 26013-080162 | BOLT, M8X 16 | 1 | | | | | | | |

N:Old $\overset{\text{Yes}}{\underset{\text{No}}{\rightleftarrows}}$ New, Q:Old $\overset{\text{No}}{\underset{\text{Yes}}{\rightleftarrows}}$ New, R:Old $\overset{\text{Yes}}{\underset{\text{Yes}}{\rightleftarrows}}$ New, S:Old $\overset{\text{No}}{\underset{\text{No}}{\rightleftarrows}}$ New, W:Add, Z:Discontinued, F:Interchangeable by set, K:Q'ty Change

Copyright (C) YANMAR GLOBAL CS CO., LTD. All RightsReserved.

# Fig.35. CONTROL EQUIPMENT(PEDAL COVER)(TO M60543)



(A)=VIO30-6B P(KR)
(B)=
(C)=
(D)=
(E)=
(F)=

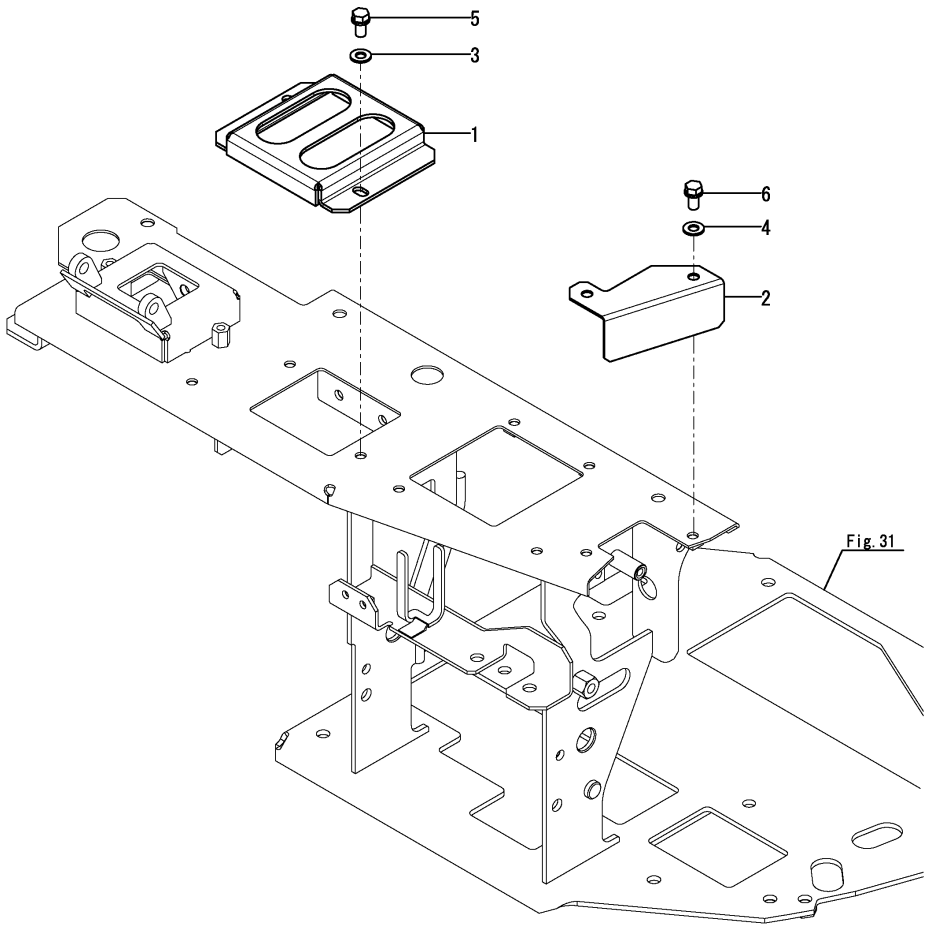


| No. | Lev. | Parts No. | Description | Q'ty (A) | (B) | (C) | (D) | (E) | (F) | I | R |
|---|---|---|---|---|---|---|---|---|---|---|---|
| 1 | 1 | 172458-45510-1 | BRACKET, BOOT | 1 | | | | | | | |
| 2 | 1 | 172B03-45550 | COVER, 2ND | 1 | | | | | | | |
| 3 | 1 | 22137-080000 | WASHER, 8 | 2 | | | | | | | |
| 4 | 1 | 22137-080000 | WASHER, 8 | 2 | | | | | | | |
| 5 | 1 | 26013-080162 | BOLT, M8X 16 | 2 | | | | | | | |
| 6 | 1 | 26013-080162 | BOLT, M8X 16 | 2 | | | | | | | |

N:Old $\overset{\text{Yes}}{\underset{\text{No}}{\rightleftarrows}}$ New, Q:Old $\overset{\text{No}}{\underset{\text{Yes}}{\rightleftarrows}}$ New, R:Old $\overset{\text{Yes}}{\underset{\text{Yes}}{\rightleftarrows}}$ New, S:Old $\overset{\text{No}}{\underset{\text{No}}{\rightleftarrows}}$ New, W:Add, Z:Discontinued, F:Interchangeable by set, K:Q'ty Change

Copyright (C) YANMAR GLOBAL CS CO., LTD. All RightsReserved.

# Fig.120. (35A)CONTROL EQUIPMENT(PEDAL COVER)(P.T.O. HAND OPERATE SPEC.)(FROM M60544)

(A)=VIO30-6B P(KR)
(B)=
(C)=
(D)=
(E)=
(F)=

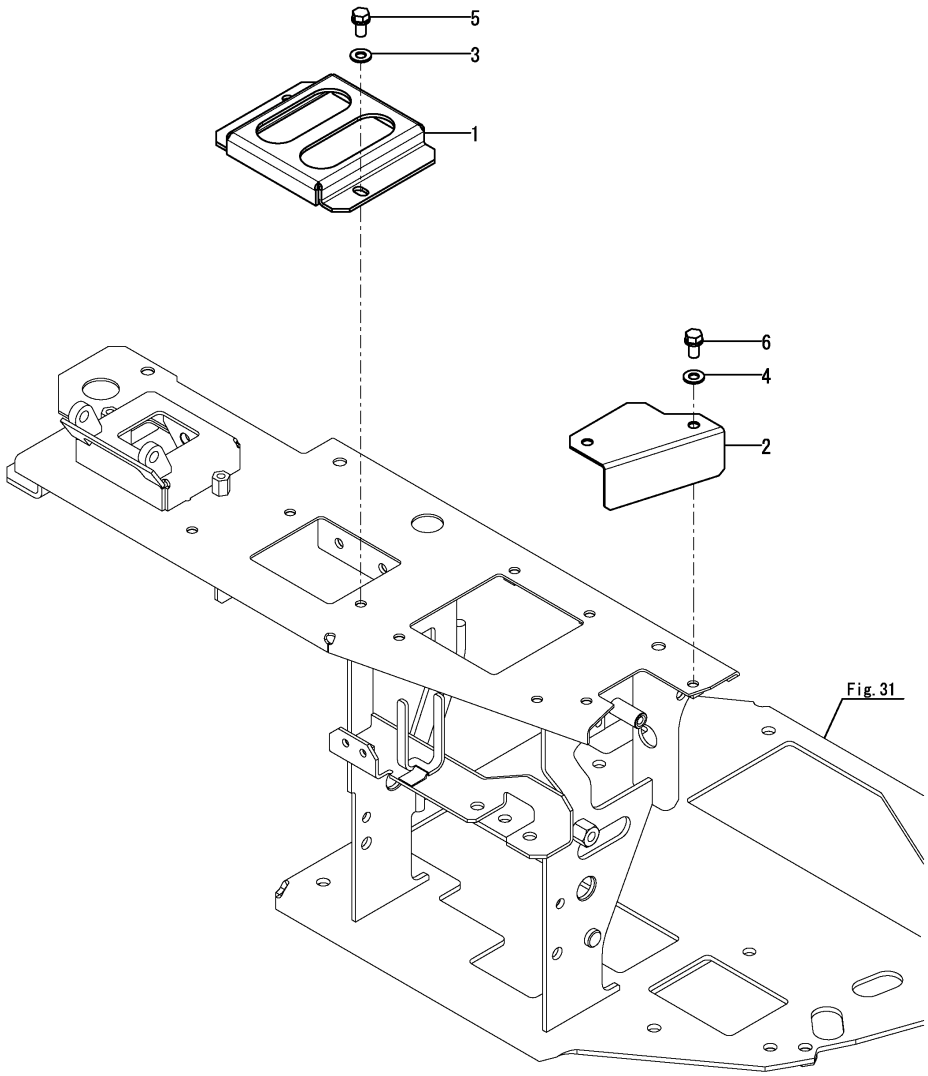


| No. | Lev. | Parts No. | Description | Q'ty (A) | (B) | (C) | (D) | (E) | (F) | I | R |
|---|---|---|---|---|---|---|---|---|---|---|---|
| 1 | 1 | 172458-45510-1 | BRACKET, BOOT | 1 | | | | | | | |
| 2 | 1 | 172B03-45580 | COVER, NO 2ND | 1 | | | | | | | |
| 3 | 1 | 22137-080000 | WASHER, 8 | 2 | | | | | | | |
| 4 | 1 | 22137-080000 | WASHER, 8 | 2 | | | | | | | |
| 5 | 1 | 26013-080162 | BOLT, M8X 16 | 2 | | | | | | | |
| 6 | 1 | 26013-080162 | BOLT, M8X 16 | 2 | | | | | | | |

N:Old $\overset{\text{Yes}}{\underset{\text{No}}{\rightleftarrows}}$ New, Q:Old $\overset{\text{No}}{\underset{\text{Yes}}{\rightleftarrows}}$ New, R:Old $\overset{\text{Yes}}{\underset{\text{Yes}}{\rightleftarrows}}$ New, S:Old $\overset{\text{No}}{\underset{\text{No}}{\rightleftarrows}}$ New, W:Add, Z:Discontinued, F:Interchangeable by set, K:Q'ty Change

Copyright (C) YANMAR GLOBAL CS CO., LTD. All RightsReserved.

# Fig.145. (35B)PEDAL COVER(WITHOUT P.T.O. SPEC.)

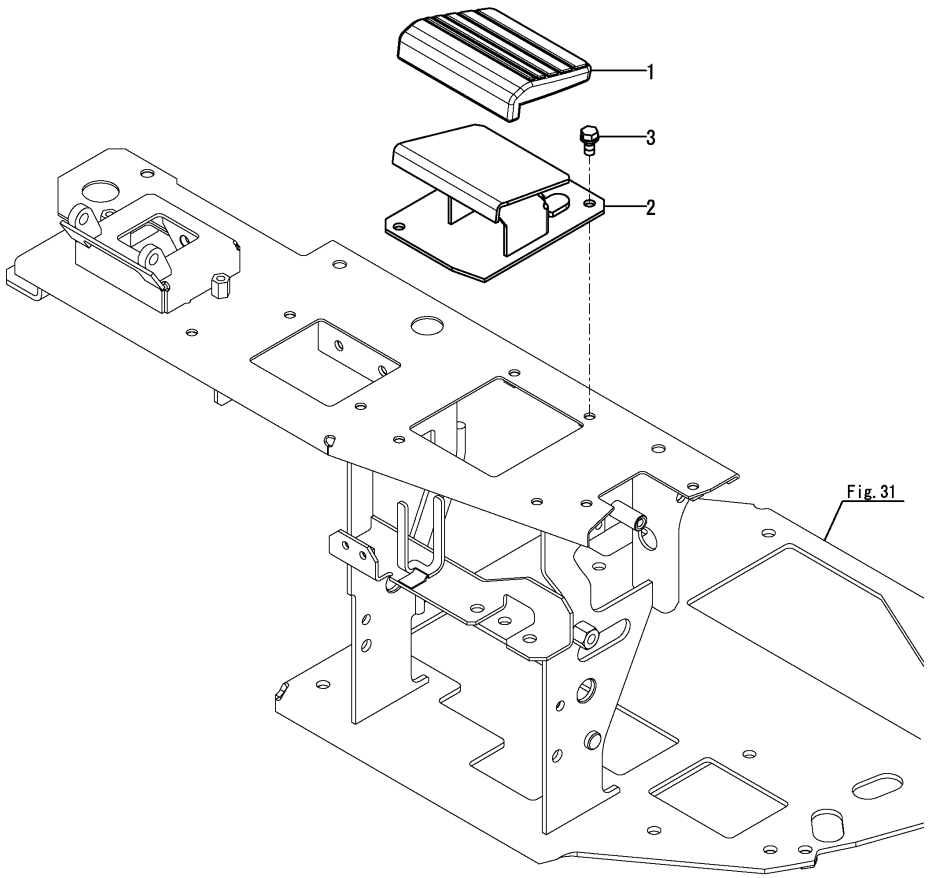


(A)=VIO30-6B P(KR)
(B)=
(C)=
(D)=
(E)=
(F)=

| No. | Lev. | Parts No. | Description | Q'ty (A) | (B) | (C) | (D) | (E) | (F) | I | R |
|---|---|---|---|---|---|---|---|---|---|---|---|
| 1 | 1 | 172187-45760 | PAD | 1 | | | | | | | |
| 2 | 1 | 172B03-46810 | COVER ASSY, NO PTO | 1 | | | | | | | |
| 3 | 1 | 26013-080162 | BOLT, M8X 16 | 3 | | | | | | | |

N:Old $\overset{\text{Yes}}{\underset{\text{No}}{\rightleftarrows}}$ New, Q:Old $\overset{\text{No}}{\underset{\text{Yes}}{\rightleftarrows}}$ New, R:Old $\overset{\text{Yes}}{\underset{\text{Yes}}{\rightleftarrows}}$ New, S:Old $\overset{\text{No}}{\underset{\text{No}}{\rightleftarrows}}$ New, W:Add, Z:Discontinued, F:Interchangeable by set, K:Q'ty Change

Copyright (C) YANMAR GLOBAL CS CO., LTD. All RightsReserved.

# Fig.36. CONTROL EQUIPMENT(ARM REST)

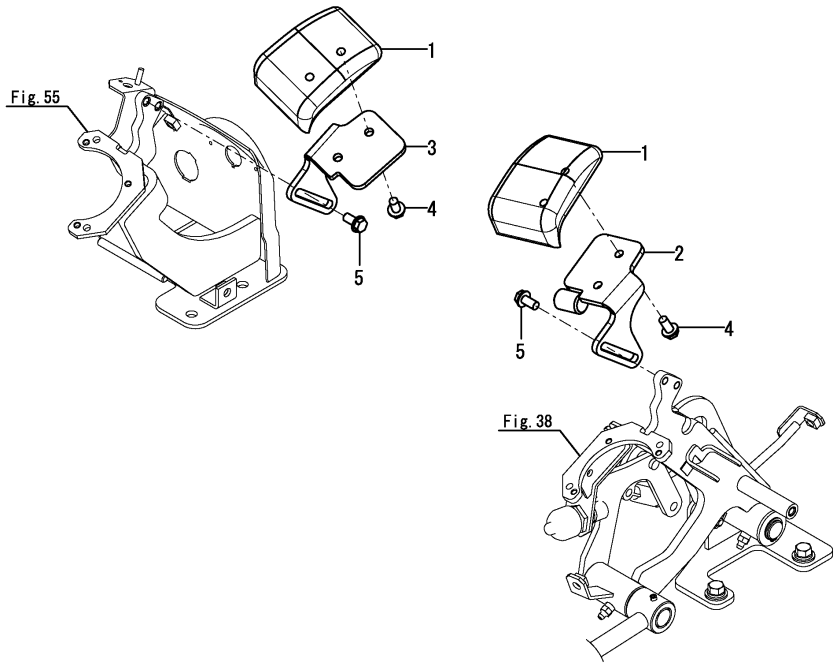




(A)=VIO30-6B P(KR)
(B)=
(C)=
(D)=
(E)=
(F)=

| No. | Lev. | Parts No. | Description | Q'ty (A) | (B) | (C) | (D) | (E) | (F) | I | R |
|---|---|---|---|---|---|---|---|---|---|---|---|
| 1 | 1 | 172441-44320 | ARMREST | 2 | | | | | | | |
| 2 | 1 | 172A46-46500 | GUIDE ASSY, L | 1 | | | | | | | |
| 3 | 1 | 172A46-46530 | PLATE, GUIDE R | 1 | | | | | | | |
| 4 | 1 | 172519-63240 | BOLT, M8X16 | 4 | | | | | | | |
| 4-1 | 1 (A=MBF757) | 172162-68370 | BOLT, M8X12 | 4 | | | | | | N | |
| 5 | 1 | 172519-63240 | BOLT, M8X16 | 4 | | | | | | | |

N:Old $\overset{\text{Yes}}{\underset{\text{No}}{\leftrightarrows}}$ New, Q:Old $\overset{\text{No}}{\underset{\text{Yes}}{\leftrightarrows}}$ New, R:Old $\overset{\text{Yes}}{\underset{\text{Yes}}{\leftrightarrows}}$ New, S:Old $\overset{\text{No}}{\underset{\text{No}}{\leftrightarrows}}$ New, W:Add, Z:Discontinued, F:Interchangeable by set, K:Q'ty Change

Copyright (C) YANMAR GLOBAL CS CO., LTD. All RightsReserved.

# Fig.37. CONTROL EQUIPMENT(BLADE LEVER)(TO M60543)

(A)=VIO30-6B P(KR)
(B)=
(C)=
(D)=
(E)=
(F)=

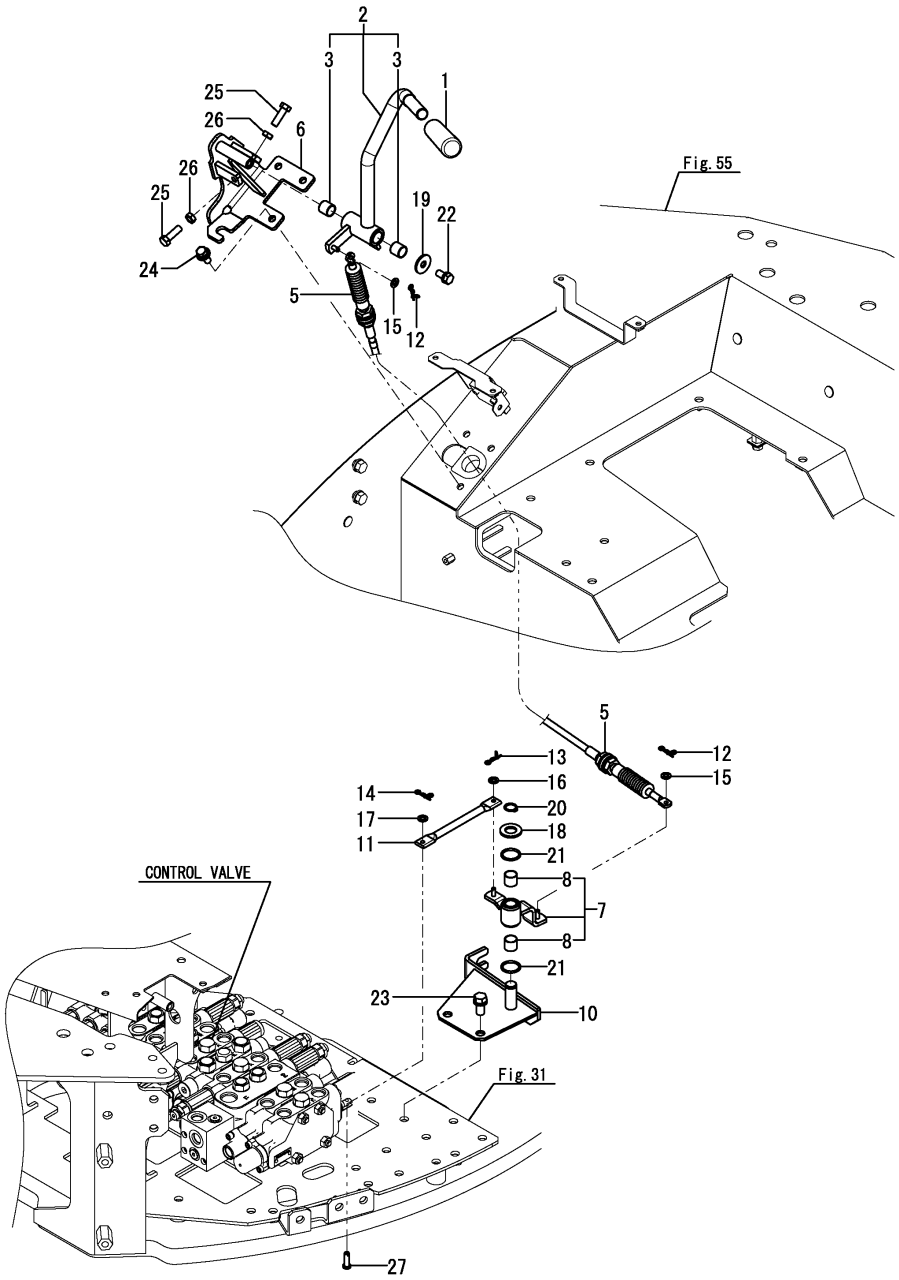


| No. | Lev. | Parts No. | Description | Q'ty (A) | (B) | (C) | (D) | (E) | (F) | I | R |
|---|---|---|---|---|---|---|---|---|---|---|---|
| 1 | 1 | 172964-12140 | GRIP | 1 | | | | | | | |
| 2 | 1 | 172B03-45350 | LEVER ASSY, BLADE JP | 1 | | | | | | | |
| 3 | 2 | 172141-41360 | BUSH | 2 | | | | | | | |
| 5 | 1 | 172B03-45800 | CABLE, BLADE | 1 | | | | | | | |
| 6 | 1 | 172B03-45850 | BRACKET ASSY, BLADE | 1 | | | | | | | |
| 7 | 1 | 172B03-45900 | BOSS ASSY, LINK | 1 | | | | | | | |
| 8 | 2 | 172141-41360 | BUSH | 2 | | | | | | | |
| 10 | 1 | 172B03-45950 | SHAFT ASSY, LINK | 1 | | | | | | | |
| 11 | 1 | 172B03-45990 | ROD, 130 | 1 | | | | | | | |
| 12 | 1 | 1C6281-52310 | PIN, SNAP 6 | 2 | | | | | | | |
| 13 | 1 | 1C6281-52310 | PIN, SNAP 6 | 1 | | | | | | | |
| 14 | 1 | 1C6281-52310 | PIN, SNAP 6 | 1 | | | | | | | |
| 15 | 1 | 22137-050000 | WASHER, 5 | 2 | | | | | | | |
| 16 | 1 | 22137-050000 | WASHER, 5 | 1 | | | | | | | |
| 17 | 1 | 22137-050000 | WASHER, 5 | 1 | | | | | | | |
| 18 | 1 | 22137-140000 | WASHER, 14 | 1 | | | | | | | |
| 19 | 1 | 22157-080000 | WASHER, 8 | 1 | | | | | | | |
| 20 | 1 | 22242-000140 | RING, 14 | 1 | | | | | | | |
| 21 | 1 | 24311-000210 | O-RING, 1AP21.0 | 2 | | | | | | | |
| 22 | 1 | 26013-080162 | BOLT, M8X 16 | 1 | | | | | | | |
| 23 | 1 | 26013-100202 | BOLT, M10X 20 | 2 | | | | | | | |
| 24 | 1 | 26014-080202 | BOLT, M8X 20 | 3 | | | | | | | |
| 25 | 1 | 26116-080252 | BOLT, M8X 25 PLATED | 2 | | | | | | | |
| 26 | 1 | 26756-080002 | NUT, LOCK M8 | 2 | | | | | | | |
| 27 | 1 | 933110-54100 | PIN, 4.75X14 | 1 | | | | | | | |

N:Old $\overset{\text{Yes}}{\underset{\text{No}}{\rightleftarrows}}$ New, Q:Old $\overset{\text{No}}{\underset{\text{Yes}}{\rightleftarrows}}$ New, R:Old $\overset{\text{Yes}}{\underset{\text{Yes}}{\rightleftarrows}}$ New, S:Old $\overset{\text{No}}{\underset{\text{No}}{\rightleftarrows}}$ New, W:Add, Z:Discontinued, F:Interchangeable by set, K:Q'ty Change

Copyright (C) YANMAR GLOBAL CS CO., LTD. All RightsReserved.

# Fig.121. (37A)CONTROL EQUIPMENT(BLADE LEVER)(LOW-HIGH SWITCH)(FROM M60544)

(A)=VIO30-6B P(KR)
(B)=
(C)=
(D)=
(E)=
(F)=

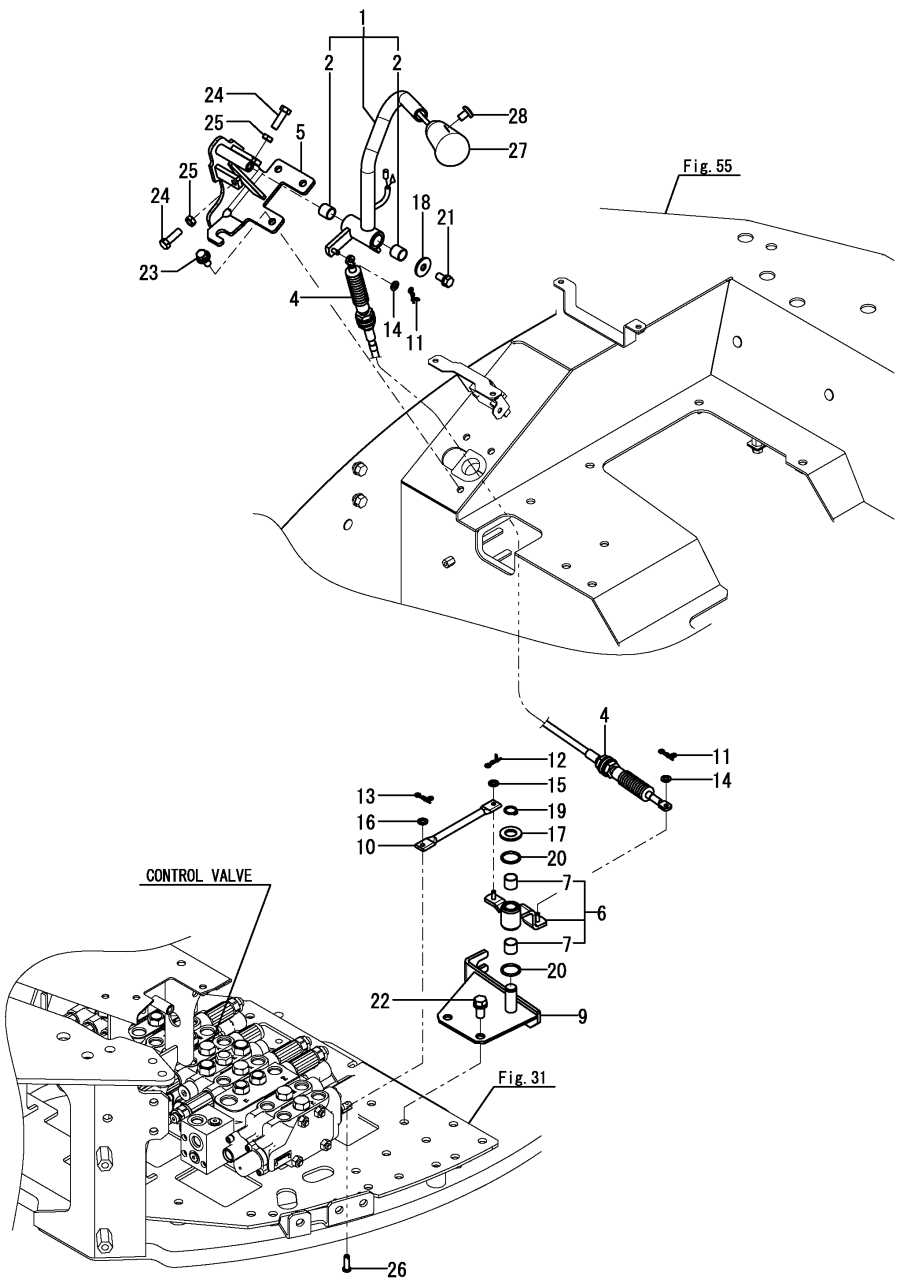


| No. | Lev. | Parts No. | Description | Q'ty (A) | (B) | (C) | (D) | (E) | (F) | I | R |
|---|---|---|---|---|---|---|---|---|---|---|---|
| 1 | 1 | 172B03-45450 | LEVER ASSY, BLADE EX | 1 | | | | | | | |
| 2 | 2 | 172141-41360 | BUSH | 2 | | | | | | | |
| 4 | 1 | 172B03-45800 | CABLE, BLADE | 1 | | | | | | | |
| 5 | 1 | 172B03-45850 | BRACKET ASSY, BLADE | 1 | | | | | | | |
| 6 | 1 | 172B03-45900 | BOSS ASSY, LINK | 1 | | | | | | | |
| 7 | 2 | 172141-41360 | BUSH | 2 | | | | | | | |
| 9 | 1 | 172B03-45950 | SHAFT ASSY, LINK | 1 | | | | | | | |
| 10 | 1 | 172B03-45990 | ROD, 130 | 1 | | | | | | | |
| 11 | 1 | 1C6281-52310 | PIN, SNAP 6 | 2 | | | | | | | |
| 12 | 1 | 1C6281-52310 | PIN, SNAP 6 | 1 | | | | | | | |
| 13 | 1 | 1C6281-52310 | PIN, SNAP 6 | 1 | | | | | | | |
| 14 | 1 | 22137-050000 | WASHER, 5 | 2 | | | | | | | |
| 15 | 1 | 22137-050000 | WASHER, 5 | 1 | | | | | | | |
| 16 | 1 | 22137-050000 | WASHER, 5 | 1 | | | | | | | |
| 17 | 1 | 22137-140000 | WASHER, 14 | 1 | | | | | | | |
| 18 | 1 | 22157-080000 | WASHER, 8 | 1 | | | | | | | |
| 19 | 1 | 22242-000140 | RING, 14 | 1 | | | | | | | |
| 20 | 1 | 24311-000210 | O-RING, 1AP21.0 | 2 | | | | | | | |
| 21 | 1 | 26013-080162 | BOLT, M8X 16 | 1 | | | | | | | |
| 22 | 1 | 26013-100202 | BOLT, M10X 20 | 2 | | | | | | | |
| 23 | 1 | 26014-080202 | BOLT, M8X 20 | 3 | | | | | | | |
| 24 | 1 | 26116-080252 | BOLT, M8X 25 PLATED | 2 | | | | | | | |
| 25 | 1 | 26756-080002 | NUT, LOCK M8 | 2 | | | | | | | |
| 26 | 1 | 933110-54100 | PIN, 4.75X14 | 1 | | | | | | | |
| 27 | 1 | 172B03-17500 | KNOB ASSY, SWITCH | 1 | | | | | | | |
| 28 | 1 | 26587-040062 | SCREW, M4X 6 | 1 | | | | | | | |

N:Old $\overset{\text{Yes}}{\underset{\text{No}}{\rightleftarrows}}$ New, Q:Old $\overset{\text{No}}{\underset{\text{Yes}}{\rightleftarrows}}$ New, R:Old $\overset{\text{Yes}}{\underset{\text{Yes}}{\rightleftarrows}}$ New, S:Old $\overset{\text{No}}{\underset{\text{No}}{\rightleftarrows}}$ New, W:Add, Z:Discontinued, F:Interchangeable by set, K:Q'ty Change

Copyright (C) YANMAR GLOBAL CS CO., LTD. All RightsReserved.

# Fig.38. CONTROL EQUIPMENT(LOCK LEVER & STAND)

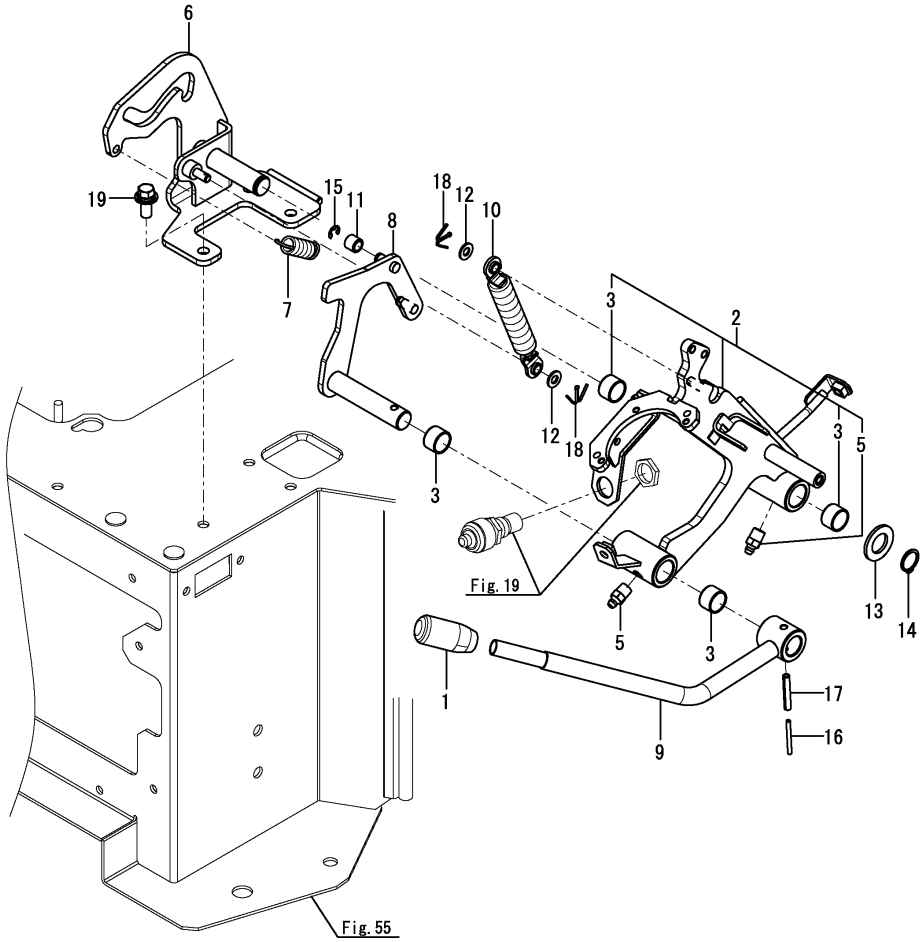


(A)=VIO30-6B P(KR)
(B)=
(C)=
(D)=
(E)=
(F)=

| No. | Lev. | Parts No. | Description | Q'ty (A) | (B) | (C) | (D) | (E) | (F) | I | R |
|---|---|---|---|---|---|---|---|---|---|---|---|
| 1 | 1 | 172A77-46050 | GRIP | 1 | | | | | | | |
| 2 | 1 | 172B03-46100 | STAND ASSY, LEVER L | 1 | | | | | | | |
| 3 | 2 | 172141-41370 | BUSH, 20 15 | 4 | | | | | | | |
| 5 | 2 | 24761-020000 | NIPPLE, GREASE PT1/8 | 2 | | | | | | | |
| 6 | 1 | 172B03-46200 | BASE ASSY, LEVER L | 1 | | | | | | | |
| 7 | 1 | 172A69-46270 | SPRING, 2.3X15X60 | 1 | | | | | | | |
| 8 | 1 | 172B03-46310 | ROD ASSY, GUIDE | 1 | | | | | | | |
| 9 | 1 | 172B03-46350 | LEVER ASSY, LOCK L | 1 | | | | | | | |
| 10 | 1 | 172455-46890 | SPRING, GAS | 1 | | | | | | | |
| 11 | 1 | 172165-47550 | BUSH | 1 | | | | | | | |
| 12 | 1 | 22137-080000 | WASHER, 8 | 2 | | | | | | | |
| 13 | 1 | 22137-200000 | WASHER, 20 | 1 | | | | | | | |
| 14 | 1 | 22242-000200 | RING, 20 | 1 | | | | | | | |
| 15 | 1 | 22272-000070 | RING, E- 7 | 1 | | | | | | | |
| 16 | 1 | 22351-035040 | PIN, SPRING 3.5X40 | 1 | | | | | | | |
| 17 | 1 | 22351-060040 | PIN, SPRING 6.0X40 | 1 | | | | | | | |
| 18 | 1 | 22417-200200 | PIN, COTTER 2.0X20 | 2 | | | | | | | |
| 19 | 1 | 26014-100252 | BOLT, M10X 25 | 3 | | | | | | | |

N:Old $\overset{\text{Yes}}{\underset{\text{No}}{\leftrightarrows}}$ New, Q:Old $\overset{\text{No}}{\underset{\text{Yes}}{\leftrightarrows}}$ New, R:Old $\overset{\text{Yes}}{\underset{\text{Yes}}{\leftrightarrows}}$ New, S:Old $\overset{\text{No}}{\underset{\text{No}}{\leftrightarrows}}$ New, W:Add, Z:Discontinued, F:Interchangeable by set, K:Q'ty Change

Copyright (C) YANMAR GLOBAL CS CO., LTD. All RightsReserved.

# Fig.122. (38A)CONTROL EQUIPMENT(LEVER SPACER)(P.T.O. HAND OPERATE SPEC.)(FROM M60544)

(A)=VIO30-6B P(KR)
(B)=
(C)=
(D)=
(E)=
(F)=

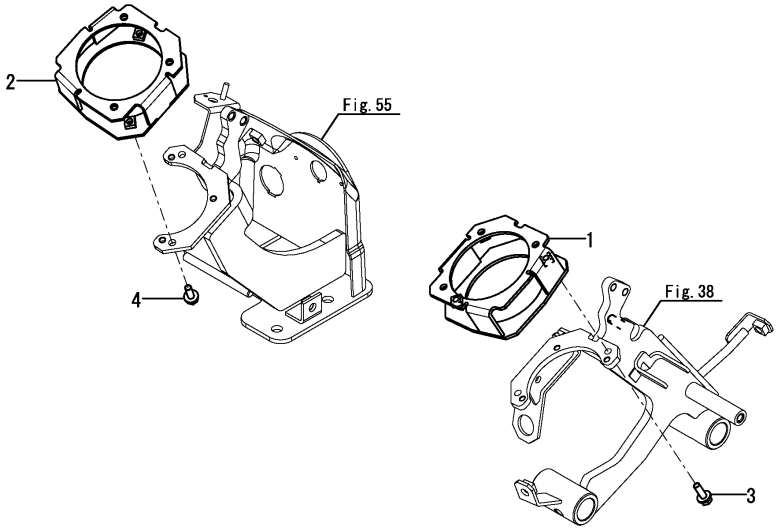


| No. | Lev. | Parts No. | Description | Q'ty (A) | (B) | (C) | (D) | (E) | (F) | I | R |
|---|---|---|---|---|---|---|---|---|---|---|---|
| 1 | 1 | 172B03-46010 | SPACER ASSY, L | 1 | | | | | | | |
| 2 | 1 | 172B03-46060 | SPACER ASSY, R | 1 | | | | | | | |
| 3 | 1 | 26014-060202 | BOLT, M6X 20 | 2 | | | | | | | |
| 4 | 1 | 26014-060202 | BOLT, M6X 20 | 2 | | | | | | | |

N:Old $\overset{\text{Yes}}{\underset{\text{No}}{\rightleftarrows}}$ New, Q:Old $\overset{\text{No}}{\underset{\text{Yes}}{\rightleftarrows}}$ New, R:Old $\overset{\text{Yes}}{\underset{\text{Yes}}{\rightleftarrows}}$ New, S:Old $\overset{\text{No}}{\underset{\text{No}}{\rightleftarrows}}$ New, W:Add, Z:Discontinued, F:Interchangeable by set, K:Q'ty Change

Copyright (C) YANMAR GLOBAL CS CO., LTD. All RightsReserved.

# Fig.39. CONTROL EQUIPMENT(P.T.O. PEDAL)

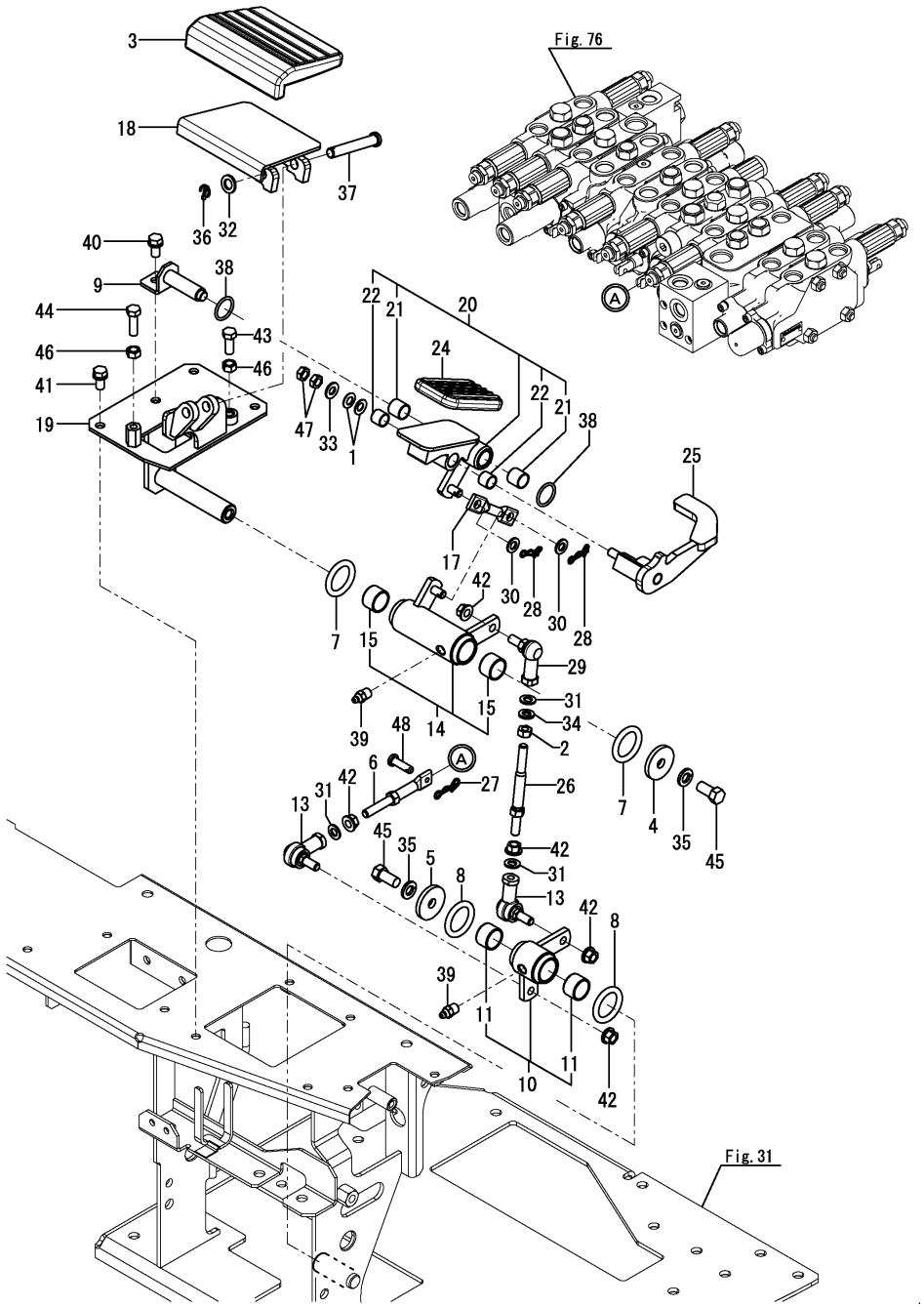


(A)=VIO30-6B P(KR)
(B)=
(C)=
(D)=
(E)=
(F)=

| No. | Lev. | Parts No. | Description | Q'ty (A) | (B) | (C) | (D) | (E) | (F) | I | R |
|---|---|---|---|---|---|---|---|---|---|---|---|
| 1 | 1 | 172068-28490 | SPRING, SCREW 8 | 2 | | | | | | | |
| 2 | 1 | 194200-37780 | NUT, M8 | 1 | | | | | | | |
| 3 | 1 | 172187-45760 | PAD | 1 | | | | | | | |
| 4 | 1 | 1A1040-45890 | WASHER, 10X36X4.5 | 1 | | | | | | | |
| 5 | 1 | 1A1040-45890 | WASHER, 10X36X4.5 | 1 | | | | | | | |
| 6 | 1 | 172187-46190 | ROD ASSY, A | 1 | | | | | | | |
| 7 | 1 | 172124-46200 | O-RING, 27.6X5.7 | 2 | | | | | | | |
| 8 | 1 | 172124-46200 | O-RING, 27.6X5.7 | 2 | | | | | | | |
| 9 | 1 | 172187-46400-1 | BRACKET ASSY | 1 | | | | | | | |
| 10 | 1 | 172B03-46550 | LINK ASSY, PTO A | 1 | | | | | | | |
| 11 | 2 | 172141-41370 | BUSH, 20 15 | 2 | | | | | | | |
| 13 | 1 | 172122-46590 | ELBOW, 8 | 2 | | | | | | | |
| 14 | 1 | 172B03-46600 | LINK ASSY, PTO B | 1 | | | | | | | |
| 15 | 2 | 172141-41370 | BUSH, 20 15 | 2 | | | | | | | |
| 17 | 1 | 172B03-46630 | ROD, 60 | 1 | | | | | | | |
| 18 | 1 | 172B03-46650 | COVER ASSY, PEDAL | 1 | | | | | | | |
| 19 | 1 | 172B03-46670 | BASE ASSY, PEDAL | 1 | | | | | | | |
| 20 | 1 | 172B03-46750 | PEDAL ASSY, A | 1 | | | | | | | |
| 21 | 2 | 172141-41360 | BUSH | 2 | | | | | | | |
| 22 | 2 | 172110-45050 | BUSH, 12X12 | 2 | | | | | | | |
| 24 | 1 | 172B03-46790 | PAD, PEDAL | 1 | | | | | | | |
| 25 | 1 | 172B03-46800 | PEDAL ASSY, B | 1 | | | | | | | |
| 26 | 1 | 172B03-46900 | ROD ASSY, 103 | 1 | | | | | | | |
| 27 | 1 | 1C6281-52310 | PIN, SNAP 6 | 1 | | | | | | | |
| 28 | 1 | 1C6281-52320 | PIN, SNAP 8 | 2 | | | | | | | |
| 29 | 1 | 1E6740-64200 | BALL, LINK BL8DL | 1 | | | | | | | |
| 30 | 1 | 22117-080000 | WASHER, 8 | 2 | | | | | | | |
| 31 | 1 | 22117-080000 | WASHER, 8 | 3 | | | | | | | |
| 32 | 1 | 22117-100000 | WASHER, 10 | 1 | | | | | | | |
| 33 | 1 | 22137-080000 | WASHER, 8 | 1 | | | | | | | |
| 34 | 1 | 22217-080000 | WASHER, SPRING 8 | 1 | | | | | | | |
| 35 | 1 | 22217-100000 | WASHER, SPRING 10 | 2 | | | | | | | |
| 36 | 1 | 22417-250200 | PIN, COTTER 2.5X20 | 1 | | | | | | | |
| 37 | 1 | 22487-100600 | PIN, H10X 60 | 1 | | | | | | | |
| 38 | 1 | 24311-000210 | O-RING, 1AP21.0 | 2 | | | | | | | |
| 39 | 1 | 24761-020000 | NIPPLE, GREASE PT1/8 | 2 | | | | | | | |
| 40 | 1 | 26013-080162 | BOLT, M8X 16 | 1 | | | | | | | |
| 41 | 1 | 26013-080162 | BOLT, M8X 16 | 3 | | | | | | | |
| 42 | 1 | 26051-080002 | NUT, M8 | 5 | | | | | | | |
| 43 | 1 | 26116-080204 | BOLT, M8X 20 PLATED | 1 | | | | | | | |
| 44 | 1 | 26116-080254 | BOLT, M8X 25 PLATED | 1 | | | | | | | |
| 45 | 1 | 26116-100202 | BOLT, M10X 20 PLATED | 2 | | | | | | | |
| 46 | 1 | 26716-080002 | NUT, M8 | 2 | | | | | | | |
| 47 | 1 | 26756-080002 | NUT, LOCK M8 | 2 | | | | | | | |
| 48 | 1 | 933110-54100 | PIN, 4.75X14 | 1 | | | | | | | |

N:Old $\overset{\text{Yes}}{\underset{\text{No}}{\rightleftarrows}}$ New, Q:Old $\overset{\text{No}}{\underset{\text{Yes}}{\rightleftarrows}}$ New, R:Old $\overset{\text{Yes}}{\underset{\text{Yes}}{\rightleftarrows}}$ New, S:Old $\overset{\text{No}}{\underset{\text{No}}{\rightleftarrows}}$ New, W:Add, Z:Discontinued, F:Interchangeable by set, K:Q'ty Change

Copyright (C) YANMAR GLOBAL CS CO., LTD. All RightsReserved.

# Fig.40. TRACK FRAME



(A)=VIO30-6B P(KR)
(B)=
(C)=
(D)=
(E)=
(F)=

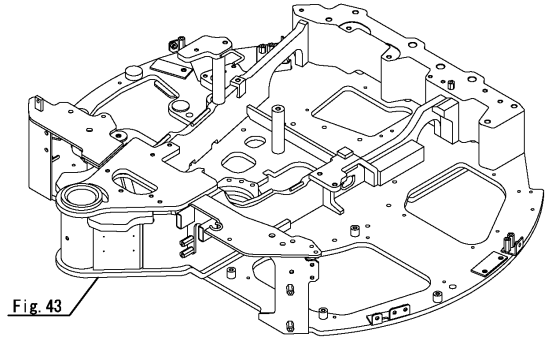


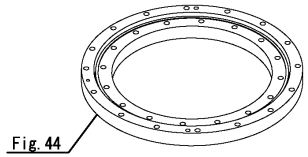


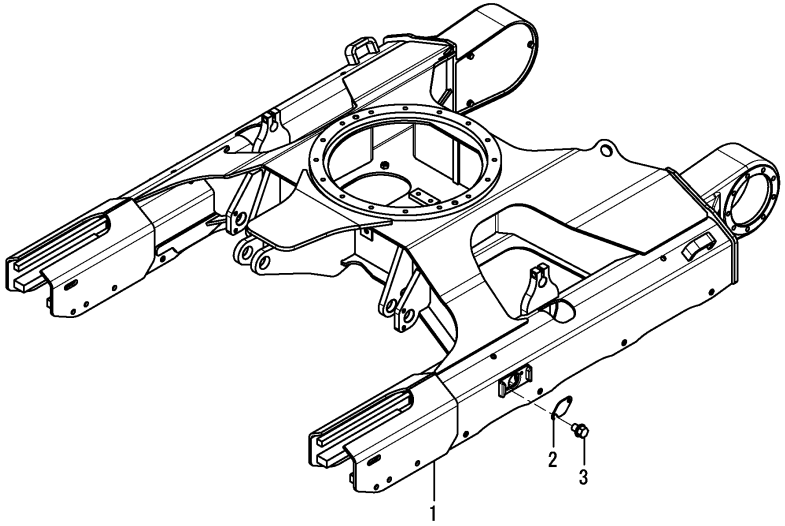


| No. | Lev. | Parts No. | Description | Q'ty (A) | (B) | (C) | (D) | (E) | (F) | I | R |
|---|---|---|---|---|---|---|---|---|---|---|---|
| 1 | 1 | 172B03-50100 | FRAME ASSY, LOWER | 1 | | | | | | | |
| 2 | 1 | 172458-50480-2 | COVER, FRAME | 2 | | | | | | | |
| 3 | 1 | 26106-100122 | BOLT, M10X 12 PLATED | 4 | | | | | | | |

N:Old $\overset{\text{Yes}}{\underset{\text{No}}{\rightleftarrows}}$ New, Q:Old $\overset{\text{No}}{\underset{\text{Yes}}{\rightleftarrows}}$ New, R:Old $\overset{\text{Yes}}{\underset{\text{Yes}}{\rightleftarrows}}$ New, S:Old $\overset{\text{No}}{\underset{\text{No}}{\rightleftarrows}}$ New, W:Add, Z:Discontinued, F:Interchangeable by set, K:Q'ty Change

Copyright (C) YANMAR GLOBAL CS CO., LTD. All RightsReserved.

# Fig.41. COUNTER WEIGHT



(A)=VIO30-6B P(KR)
(B)=
(C)=
(D)=
(E)=
(F)=

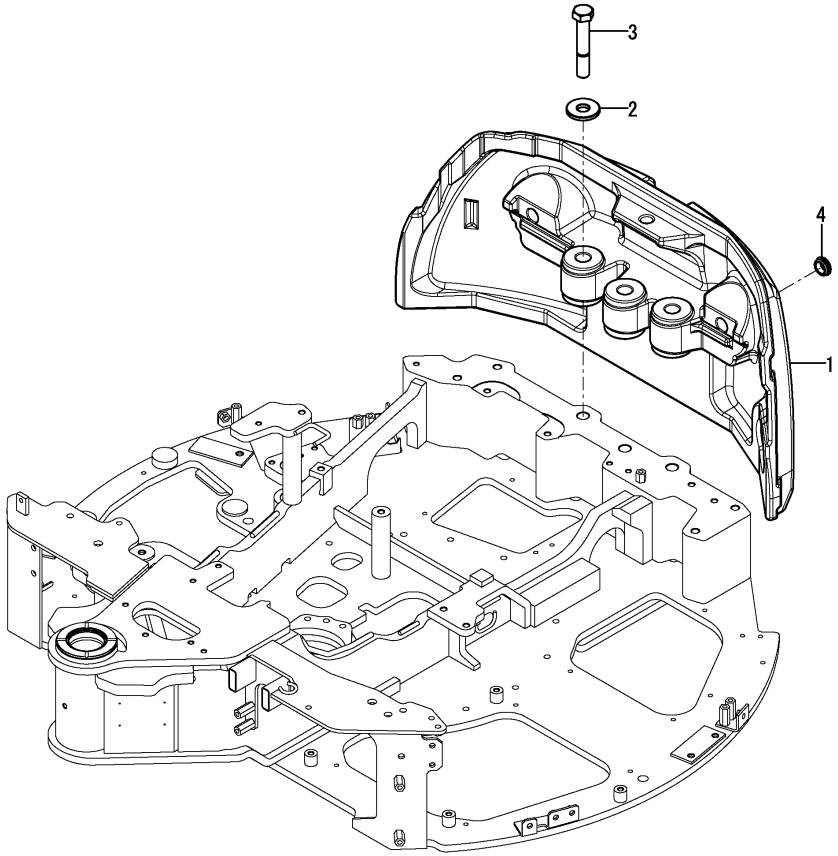


| No. | Lev. | Parts No. | Description | Q'ty (A) | (B) | (C) | (D) | (E) | (F) | I | R |
|---|---|---|---|---|---|---|---|---|---|---|---|
| 1 | 1 | 172B02-53310 | WEIGHT, COUNTER 190 | 1 | | | | | | | |
| 2 | 1 | 172187-53321 | WASHER, 24.5X65X8 | 3 | | | | | | | |
| 3 | 1 | 172455-53331 | BOLT, 24X140 | 3 | | | | | | | |
| 4 | 1 | 172456-53700 | GROMMET, 30 | 2 | | | | | | | |

N:Old $\overset{\text{Yes}}{\underset{\text{No}}{\leftrightarrows}}$ New, Q:Old $\overset{\text{No}}{\underset{\text{Yes}}{\leftrightarrows}}$ New, R:Old $\overset{\text{Yes}}{\underset{\text{Yes}}{\leftrightarrows}}$ New, S:Old $\overset{\text{No}}{\underset{\text{No}}{\leftrightarrows}}$ New, W:Add, Z:Discontinued, F:Interchangeable by set, K:Q'ty Change

Copyright (C) YANMAR GLOBAL CS CO., LTD. All RightsReserved.

# Fig.42. ADD WEIGHT



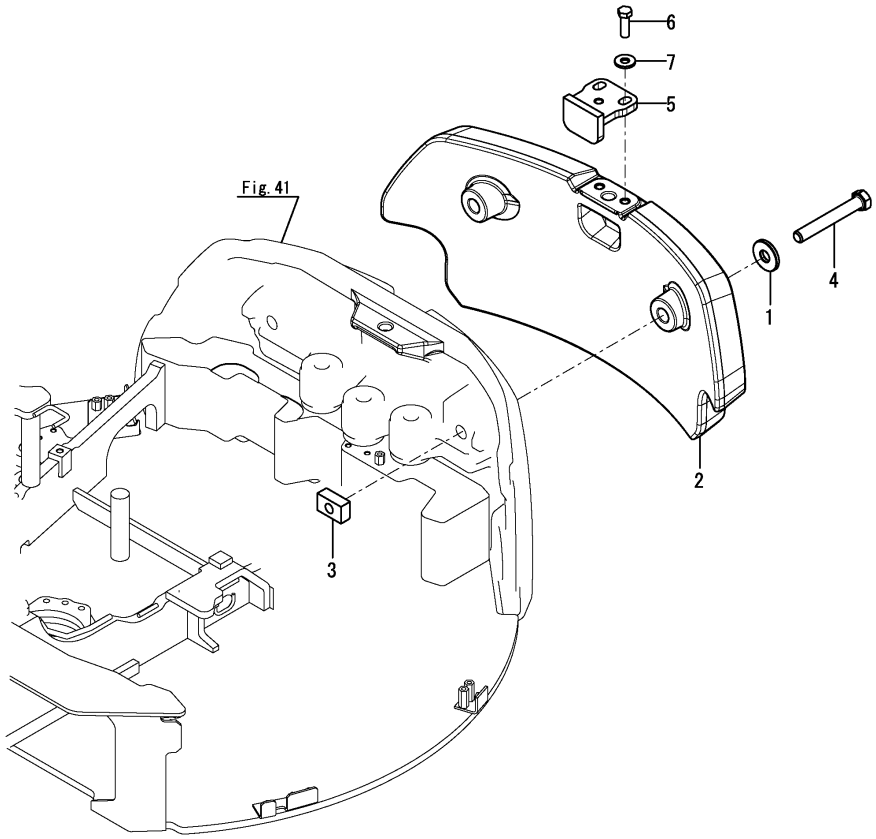


(A)=VIO30-6B P(KR)
(B)=
(C)=
(D)=
(E)=
(F)=

| No. | Lev. | Parts No. | Description | Q'ty (A) | (B) | (C) | (D) | (E) | (F) | I | R |
|---|---|---|---|---|---|---|---|---|---|---|---|
| 1 | 1 | 172187-53321 | WASHER, 24.5X65X8 | 2 | | | | | | | |
| 2 | 1 | 172B03-53320 | WEIGHT, ADD 150 | 1 | | | | | | | |
| 3 | 1 | 172A46-53360 | NUT, M24 | 2 | | | | | | | |
| 4 | 1 | 172A48-53371 | BOLT, M24X170 | 2 | | | | | | | |
| 5 | 1 | 172B03-53410 | BRACKET ASSY, WEIGHT | 1 | | | | | | | |
| 6 | 1 | 26116-160502 | BOLT, M16X 50 PLATED | 2 | | | | | | | |
| 7 | 1 | 933147-08501 | WASHER, WHEEL SHAFT | 2 | | | | | | | |

N:Old $\overset{\text{Yes}}{\underset{\text{No}}{\leftrightarrows}}$ New, Q:Old $\overset{\text{No}}{\underset{\text{Yes}}{\leftrightarrows}}$ New, R:Old $\overset{\text{Yes}}{\underset{\text{Yes}}{\leftrightarrows}}$ New, S:Old $\overset{\text{No}}{\underset{\text{No}}{\leftrightarrows}}$ New, W:Add, Z:Discontinued, F:Interchangeable by set, K:Q'ty Change

Copyright (C) YANMAR GLOBAL CS CO., LTD. All RightsReserved.

# Fig.43. TURNING FRAME



(A)=VIO30-6B P(KR)
(B)=
(C)=
(D)=
(E)=
(F)=

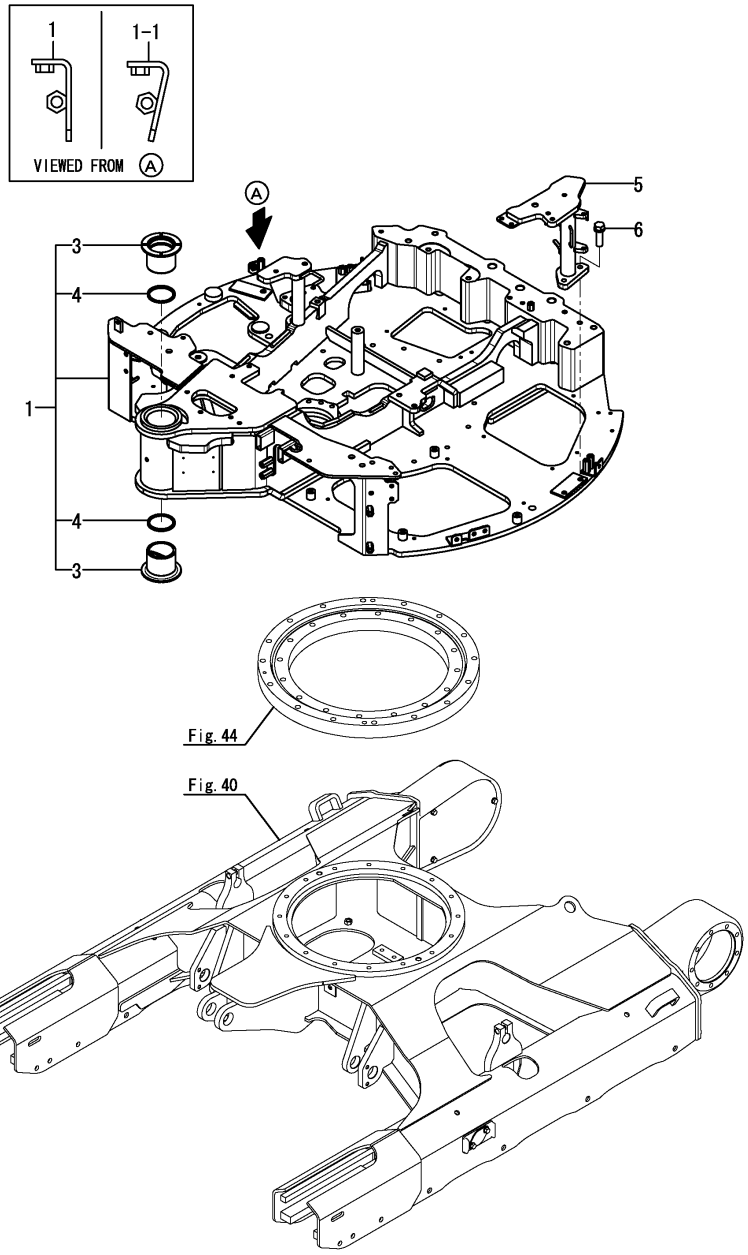


| No. | Lev. | Parts No. | Description | Q'ty (A) | (B) | (C) | (D) | (E) | (F) | I | R |
|---|---|---|---|---|---|---|---|---|---|---|---|
| 1 | 1 | 172B02-54091 | FRAME ASSY, TURNING | 1 | | | | | | | |
| 1-1 | 1 (A=M60513) | 172B02-54092 | FRAME ASSY, TURNING | 1 | | | | | | S | |
| 3 | 2 | 172169-54750 | BUSH, 70X75 | 2 | | | | | | | |
| 4 | 2 | 172165-81770 | SEAL, DUST 70X80X6 | 2 | | | | | | | |
| 5 | 1 | 172B03-54800 | MOUNT ASSY, FRAME | 1 | | | | | | | |
| 6 | 1 | 26013-120402 | BOLT, M12X 40 | 2 | | | | | | | |

N:Old $\overset{\text{Yes}}{\underset{\text{No}}{\rightleftarrows}}$ New, Q:Old $\overset{\text{No}}{\underset{\text{Yes}}{\rightleftarrows}}$ New, R:Old $\overset{\text{Yes}}{\underset{\text{Yes}}{\rightleftarrows}}$ New, S:Old $\overset{\text{No}}{\underset{\text{No}}{\rightleftarrows}}$ New, W:Add, Z:Discontinued, F:Interchangeable by set, K:Q'ty Change

Copyright (C) YANMAR GLOBAL CS CO., LTD. All RightsReserved.

# Fig.44. TURNING BEARING



(A)=VIO30-6B P(KR)
(B)=
(C)=
(D)=
(E)=
(F)=

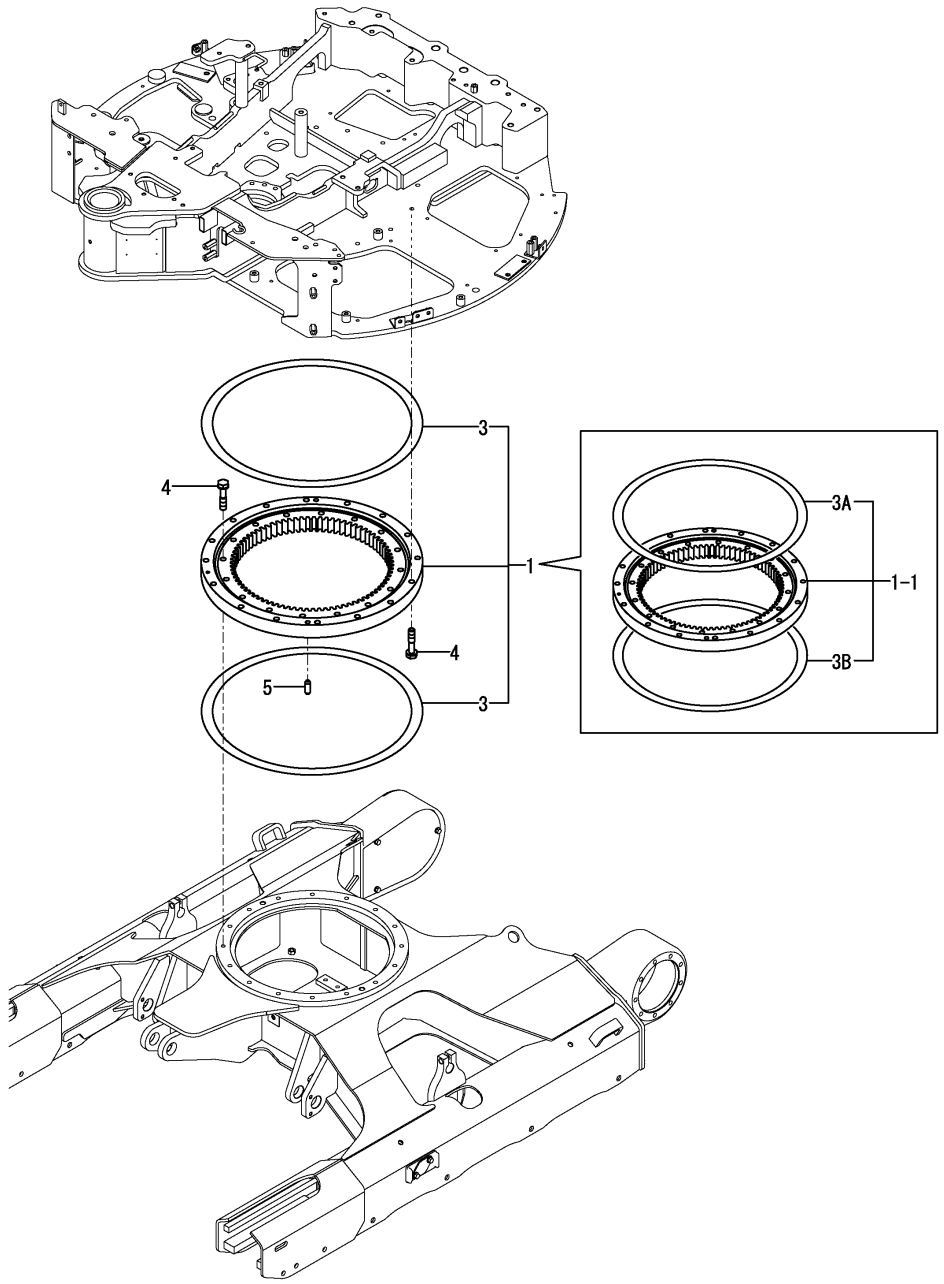


| No. | Lev. | Parts No. | Description | Q'ty (A) | (B) | (C) | (D) | (E) | (F) | I | R |
|---|---|---|---|---|---|---|---|---|---|---|---|
| 1 | 1 | 172A77-57600 | BEARING ASSY,TURNING | 1 | | | | | | | |
| 1-1 | 1 | 172458-57601-2 | BEARING,SWING | 1 | | | | | | | R |
| | (A=MBG005) | | | | | | | | | | |
| 3 | 2 | 172A77-57620 | SEAL, SWING | 2 | | | | | | | Z |
| | (A=MBG005) | | | | | | | | | | |
| 3A | 2 | 172B03-57630 | SEAL, A | 1 | | | | | | | W |
| | (A=MBG005) | | | | | | | | | | |
| 3B | 2 | 172B03-57640 | SEAL, B | 1 | | | | | | | W |
| | (A=MBG005) | | | | | | | | | | |
| 4 | 1 | 172A46-57610 | BOLT, 14X65 | 32 | | | | | | | |
| 5 | 1 | 172122-57620 | PIN, PARALLEL 13X36 | 4 | | | | | | | |

N:Old $\overset{\text{Yes}}{\underset{\text{No}}{\leftrightarrows}}$ New, Q:Old $\overset{\text{No}}{\underset{\text{Yes}}{\leftrightarrows}}$ New, R:Old $\overset{\text{Yes}}{\underset{\text{Yes}}{\leftrightarrows}}$ New, S:Old $\overset{\text{No}}{\underset{\text{No}}{\leftrightarrows}}$ New, W:Add, Z:Discontinued, F:Interchangeable by set, K:Q'ty Change

Copyright (C) YANMAR GLOBAL CS CO., LTD. All RightsReserved.

# Fig.45. COVER(FRONT)



(A)=VIO30-6B P(KR)
(B)=
(C)=
(D)=
(E)=
(F)=

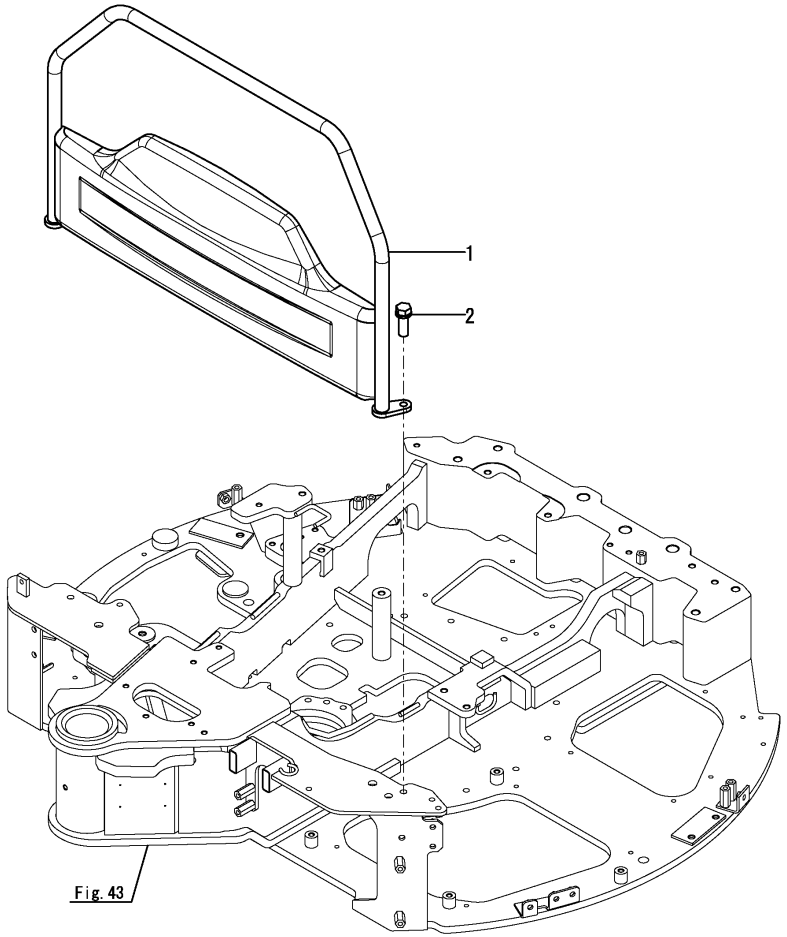


| No. | Lev. | Parts No. | Description | Q'ty (A) | (B) | (C) | (D) | (E) | (F) | I | R |
|---|---|---|---|---|---|---|---|---|---|---|---|
| 1 | 1 | 172B03-61610 | COVER ASSY, FRONT | 1 | | | | | | | |
| 2 | 1 | 26013-120352 | BOLT, M12X 35 | 2 | | | | | | | |

N:Old $\overset{\text{Yes}}{\underset{\text{No}}{\rightleftarrows}}$ New, Q:Old $\overset{\text{No}}{\underset{\text{Yes}}{\rightleftarrows}}$ New, R:Old $\overset{\text{Yes}}{\underset{\text{Yes}}{\rightleftarrows}}$ New, S:Old $\overset{\text{No}}{\underset{\text{No}}{\rightleftarrows}}$ New, W:Add, Z:Discontinued, F:Interchangeable by set, K:Q'ty Change

Copyright (C) YANMAR GLOBAL CS CO., LTD. All RightsReserved.

# Fig.46. COVER(MULTI)



(A)=VIO30-6B P(KR)
(B)=
(C)=
(D)=
(E)=
(F)=

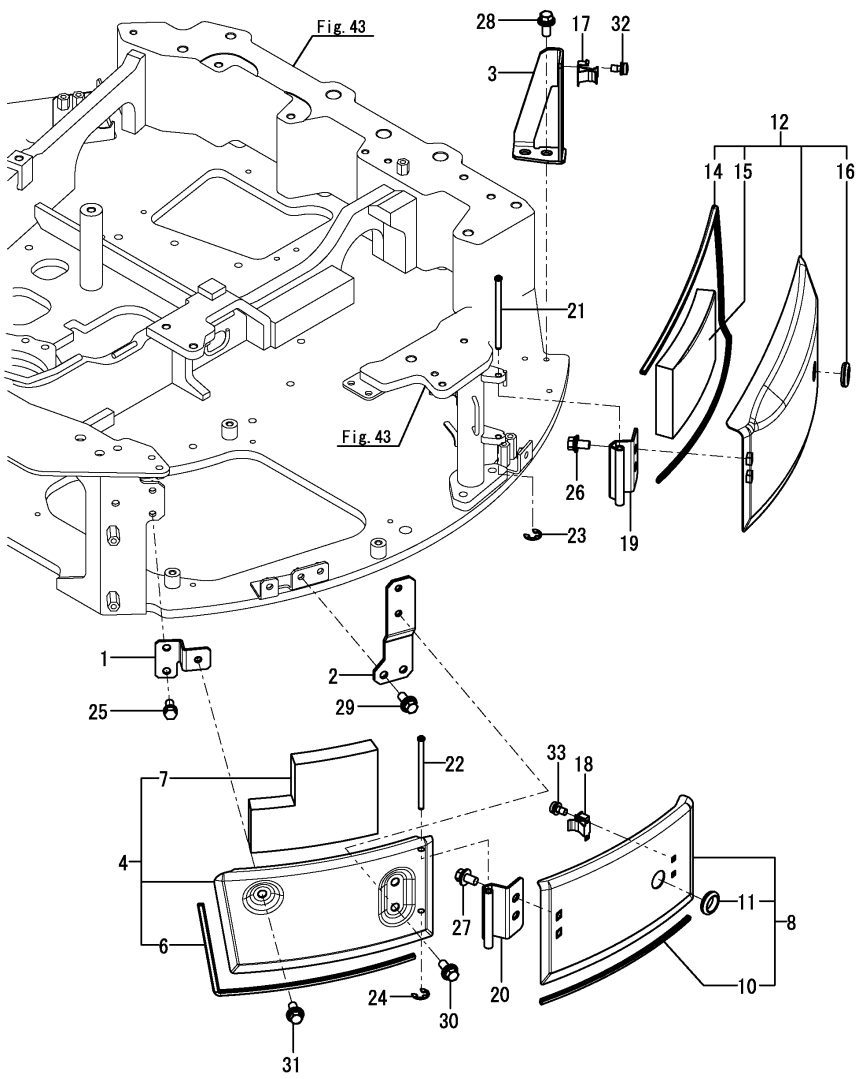


| No. | Lev. | Parts No. | Description | Q'ty (A) | (B) | (C) | (D) | (E) | (F) | I | R |
|---|---|---|---|---|---|---|---|---|---|---|---|
| 1 | 1 | 172B03-61050 | STAY ASSY, MULTI | 1 | | | | | | | |
| 2 | 1 | 172B03-61070 | STAY ASSY, MULTI A B | 1 | | | | | | | |
| 3 | 1 | 172B03-61090 | STAY, HOLDER | 1 | | | | | | | |
| 4 | 1 | 172B03-61200 | COVER ASSY, MULTI A | 1 | | | | | | | |
| 6 | 2 | 172B03-61450 | SEAL, MULTI A | 1 | | | | | | | |
| 7 | 2 | 172B03-61480 | SPONGE, MULTI A | 1 | | | | | | | |
| 8 | 1 | 172B03-61230 | COVER ASSY, MULTI B | 1 | | | | | | | |
| 10 | 2 | 172B03-61460 | SEAL, MULTI B | 1 | | | | | | | |
| 11 | 2 | 172137-66230 | GROMMET | 1 | | | | | | | |
| 12 | 1 | 172B03-61260 | COVER ASSY, MULTI C | 1 | | | | | | | |
| 14 | 2 | 172B03-61470 | SEAL, MULTI C | 1 | | | | | | | |
| 15 | 2 | 172B03-61490 | SPONGE, MULTI C | 1 | | | | | | | |
| 16 | 2 | 172137-66230 | GROMMET | 1 | | | | | | | |
| 17 | 1 | 198220-61480 | HOLDER, ROD | 1 | | | | | | | |
| 18 | 1 | 198220-61480 | HOLDER, ROD | 1 | | | | | | | |
| 19 | 1 | 172B03-61540 | HINGE ASSY, MULTI | 1 | | | | | | | |
| 20 | 1 | 172B03-61540 | HINGE ASSY, MULTI | 1 | | | | | | | |
| 21 | 1 | 172448-65490 | SHAFT, HINGE | 1 | | | | | | | |
| 22 | 1 | 172448-65490 | SHAFT, HINGE | 1 | | | | | | | |
| 23 | 1 | 22272-000070 | RING, E- 7 | 1 | | | | | | | |
| 24 | 1 | 22272-000070 | RING, E- 7 | 1 | | | | | | | |
| 25 | 1 | 26013-100202 | BOLT, M10X 20 | 2 | | | | | | | |
| 26 | 1 | 26014-100202 | BOLT, M10X 20 | 2 | | | | | | | |
| 27 | 1 | 26014-100202 | BOLT, M10X 20 | 2 | | | | | | | |
| 28 | 1 | 26014-100252 | BOLT, M10X 25 | 2 | | | | | | | |
| 29 | 1 | 26014-100252 | BOLT, M10X 25 | 2 | | | | | | | |
| 30 | 1 | 26014-100252 | BOLT, M10X 25 | 2 | | | | | | | |
| 31 | 1 | 26014-100252 | BOLT, M10X 25 | 1 | | | | | | | |
| 32 | 1 | 26023-050102 | SCREW, M5X10 | 2 | | | | | | | |
| 33 | 1 | 26023-050102 | SCREW, M5X10 | 2 | | | | | | | |

N:Old $\overset{\text{Yes}}{\underset{\text{No}}{\rightleftarrows}}$ New, Q:Old $\overset{\text{No}}{\underset{\text{Yes}}{\rightleftarrows}}$ New, R:Old $\overset{\text{Yes}}{\underset{\text{Yes}}{\rightleftarrows}}$ New, S:Old $\overset{\text{No}}{\underset{\text{No}}{\rightleftarrows}}$ New, W:Add, Z:Discontinued, F:Interchangeable by set, K:Q'ty Change

Copyright (C) YANMAR GLOBAL CS CO., LTD. All RightsReserved.

# Fig.47. COVER(UPPER)



(A)=VIO30-6B P(KR)
(B)=
(C)=
(D)=
(E)=
(F)=

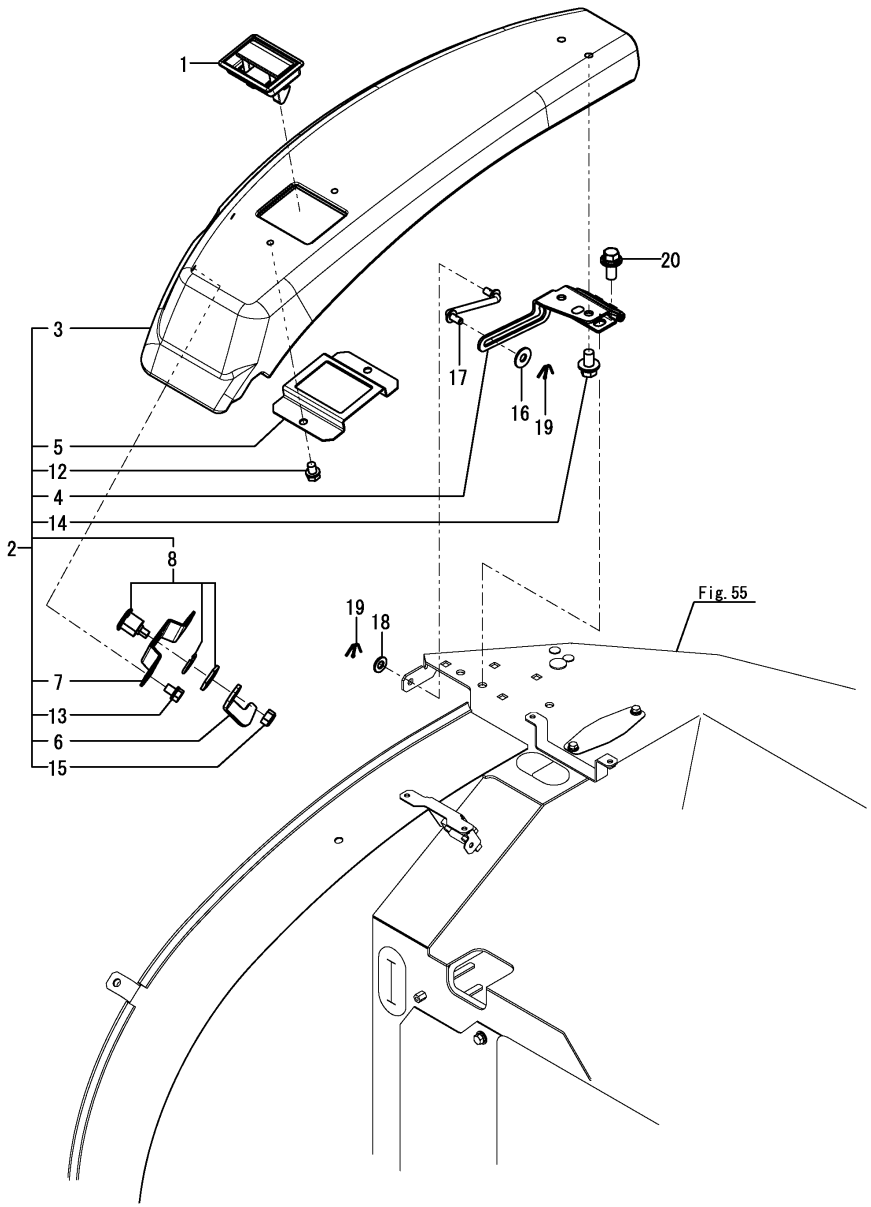


| No. | Lev. | Parts No. | Description | Q'ty (A) | (B) | (C) | (D) | (E) | (F) | I | R |
|---|---|---|---|---|---|---|---|---|---|---|---|
| 1 | 1 | 172187-61421 | HANDLE, LOCK | 1 | | | | | | | |
| 2 | 1 | 172B03-61810 | COVER ASSY, B | 1 | | | | | | | |
| 3 | 2 | 172B03-61820 | COVER, B | 1 | | | | | | | |
| 4 | 2 | 172B03-61830 | HINGE ASSY, COVER B | 1 | | | | | | | |
| 5 | 2 | 172A46-61940 | STAY, CATCH | 1 | | | | | | | |
| 6 | 2 | 172B03-61950 | STAY, KEY | 1 | | | | | | | |
| 7 | 2 | 172B03-61960 | LOCK, PLATE | 1 | | | | | | | |
| 8 | 2 | 172B03-66170 | CYLINDER ASSY, KEY | 1 | | | | | | | |
| 12 | 2 | 26013-080122 | BOLT, M8X 12 | 2 | | | | | | | |
| 13 | 2 | 26013-080122 | BOLT, M8X 12 | 2 | | | | | | | |
| 14 | 2 | 26014-100202 | BOLT, M10X 20 | 2 | | | | | | | |
| 15 | 2 | 26347-100002 | NUT, M10 | 1 | | | | | | | |
| 16 | 1 | 1A1380-62160 | WASHER, BELT COVER | 1 | | | | | | | |
| 17 | 1 | 172444-65190 | ROD ASSY, STOPPER | 1 | | | | | | | |
| 18 | 1 | 22137-080000 | WASHER, 8 | 1 | | | | | | | |
| 19 | 1 | 22417-200200 | PIN, COTTER 2.0X20 | 2 | | | | | | | |
| 20 | 1 | 26014-100252 | BOLT, M10X 25 | 2 | | | | | | | |

N:Old $\overset{\text{Yes}}{\underset{\text{No}}{\rightleftarrows}}$ New, Q:Old $\overset{\text{No}}{\underset{\text{Yes}}{\rightleftarrows}}$ New, R:Old $\overset{\text{Yes}}{\underset{\text{Yes}}{\rightleftarrows}}$ New, S:Old $\overset{\text{No}}{\underset{\text{No}}{\rightleftarrows}}$ New, W:Add, Z:Discontinued, F:Interchangeable by set, K:Q'ty Change

Copyright (C) YANMAR GLOBAL CS CO., LTD. All RightsReserved.

# Fig.48. COVER(TURNING FRAME)



(A)=VIO30-6B P(KR)
(B)=
(C)=
(D)=
(E)=
(F)=

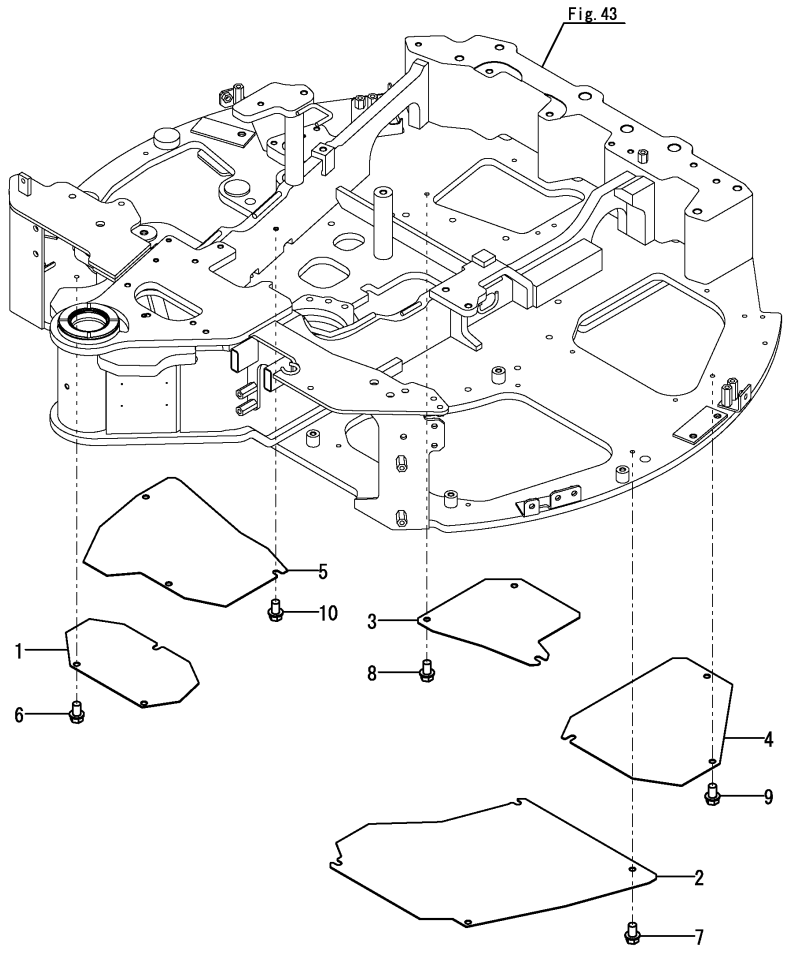


| No. | Lev. | Parts No. | Description | Q'ty (A) | (B) | (C) | (D) | (E) | (F) | I | R |
|---|---|---|---|---|---|---|---|---|---|---|---|
| 1 | 1 | 172B03-61400 | COVER, FUEL | 1 | | | | | | | |
| 2 | 1 | 172B03-61410 | COVER, VALVE STAND | 1 | | | | | | | |
| 3 | 1 | 172B02-61420 | COVER, OIL PAN | 1 | | | | | | | |
| 4 | 1 | 172B02-61430 | COVER, PUMP | 1 | | | | | | | |
| 5 | 1 | 172B03-61440 | COVER, RESERVOIR | 1 | | | | | | | |
| 6 | 1 | 26106-100162 | BOLT, M10X 16 PLATED | 3 | | | | | | | |
| 7 | 1 | 26106-100162 | BOLT, M10X 16 PLATED | 4 | | | | | | | |
| 8 | 1 | 26106-100162 | BOLT, M10X 16 PLATED | 3 | | | | | | | |
| 9 | 1 | 26106-100162 | BOLT, M10X 16 PLATED | 3 | | | | | | | |
| 10 | 1 | 26106-100162 | BOLT, M10X 16 PLATED | 3 | | | | | | | |

N:Old $\overset{\text{Yes}}{\underset{\text{No}}{\rightleftarrows}}$ New, Q:Old $\overset{\text{No}}{\underset{\text{Yes}}{\rightleftarrows}}$ New, R:Old $\overset{\text{Yes}}{\underset{\text{Yes}}{\rightleftarrows}}$ New, S:Old $\overset{\text{No}}{\underset{\text{No}}{\rightleftarrows}}$ New, W:Add, Z:Discontinued, F:Interchangeable by set, K:Q'ty Change

Copyright (C) YANMAR GLOBAL CS CO., LTD. All RightsReserved.

# Fig.49. COVER(TRACK FRAME)



(A)=VIO30-6B P(KR)
(B)=
(C)=
(D)=
(E)=
(F)=

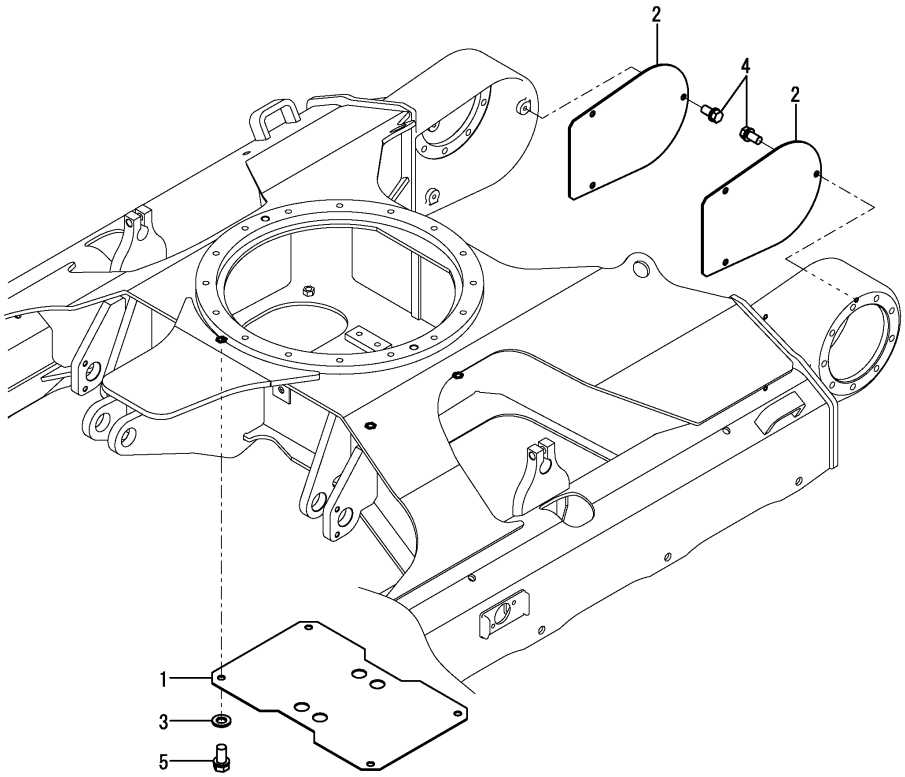


| No. | Lev. | Parts No. | Description | Q'ty (A) | (B) | (C) | (D) | (E) | (F) | I | R |
|---|---|---|---|---|---|---|---|---|---|---|---|
| 1 | 1 | 172B03-50760 | COVER, UNDER | 1 | | | | | | | |
| 2 | 1 | 172A46-61460 | COVER, TRAVEL | 2 | | | | | | | |
| 3 | 1 | 22137-120000 | WASHER, 12 | 4 | | | | | | | |
| 4 | 1 | 26013-100202 | BOLT, M10X 20 | 6 | | | | | | | |
| 5 | 1 | 26013-120252 | BOLT, M12X 25 | 4 | | | | | | | |

N:Old $\overset{\text{Yes}}{\underset{\text{No}}{\leftrightarrows}}$ New, Q:Old $\overset{\text{No}}{\underset{\text{Yes}}{\leftrightarrows}}$ New, R:Old $\overset{\text{Yes}}{\underset{\text{Yes}}{\leftrightarrows}}$ New, S:Old $\overset{\text{No}}{\underset{\text{No}}{\leftrightarrows}}$ New, W:Add, Z:Discontinued, F:Interchangeable by set, K:Q'ty Change

Copyright (C) YANMAR GLOBAL CS CO., LTD. All RightsReserved.

# Fig.50. GUARD(FRAME)



(A)=VIO30-6B P(KR)
(B)=
(C)=
(D)=
(E)=
(F)=

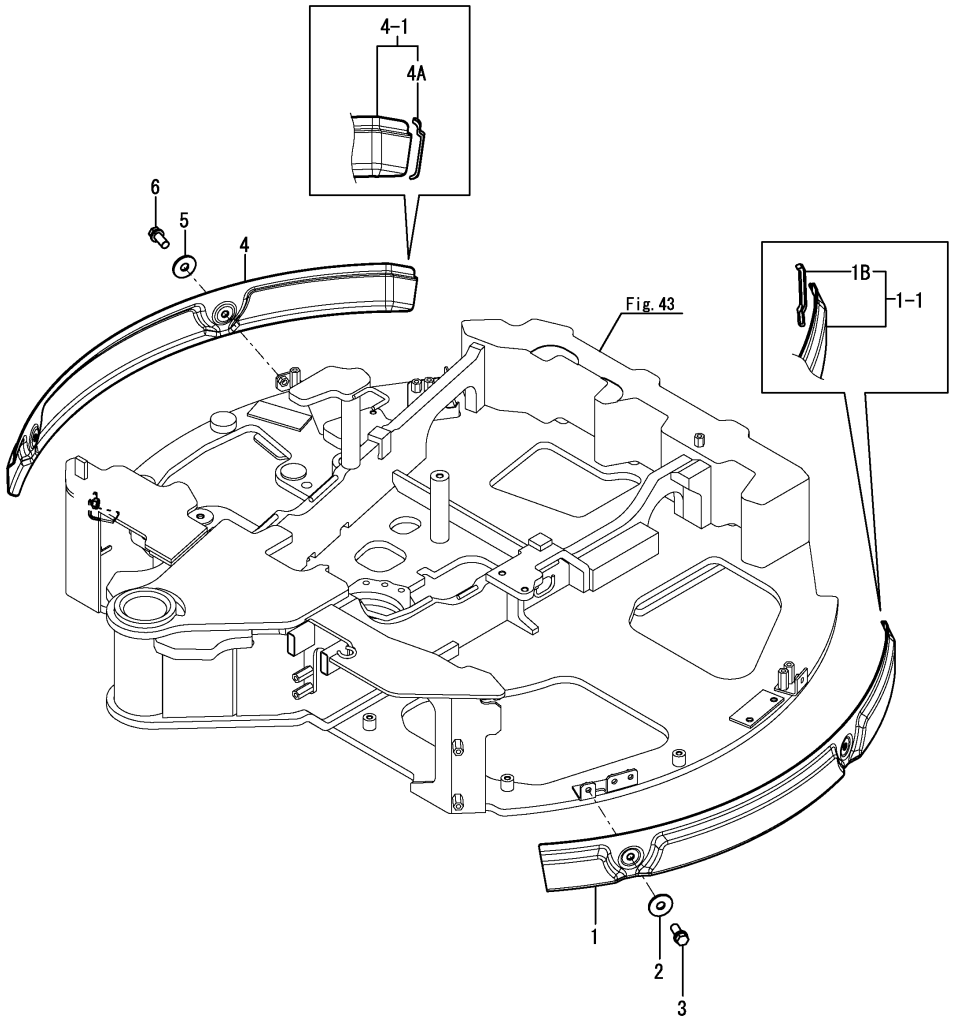


| No. | Lev. | Parts No. | Description | Q'ty (A) | (B) | (C) | (D) | (E) | (F) | I | R |
|---|---|---|---|---|---|---|---|---|---|---|---|
| 1 | 1 | 172B03-61020 | GUARD, FRAME L | 1 | | | | | | | |
| 1-1 | 1 | 172B03-61010 | GUARD ASSY, FRAME L | 1 | | | | | | N | |
| | (A=M60521) | | | | | | | | | | |
| 1B | 2 | 172434-61170 | TRIM, 90 | 1 | | | | | | W | |
| | (A=M60521) | | | | | | | | | | |
| 2 | 1 | 22157-100000 | WASHER, 10 | 2 | | | | | | | |
| 3 | 1 | 26013-100252 | BOLT, M10X 25 | 2 | | | | | | | |
| 4 | 1 | 172B03-61120 | GUARD, FRAME R | 1 | | | | | | | |
| 4-1 | 1 | 172B03-61110 | GUARD ASSY, FRAME R | 1 | | | | | | N | |
| | (A=M60521) | | | | | | | | | | |
| 4A | 2 | 172444-17620 | SEAL, 125 | 1 | | | | | | W | |
| | (A=M60521) | | | | | | | | | | |
| 5 | 1 | 22157-100000 | WASHER, 10 | 2 | | | | | | | |
| 6 | 1 | 26013-100252 | BOLT, M10X 25 | 2 | | | | | | | |

N:Old $\overset{\text{Yes}}{\underset{\text{No}}{\leftrightarrows}}$ New, Q:Old $\overset{\text{No}}{\underset{\text{Yes}}{\leftrightarrows}}$ New, R:Old $\overset{\text{Yes}}{\underset{\text{Yes}}{\leftrightarrows}}$ New, S:Old $\overset{\text{No}}{\underset{\text{No}}{\leftrightarrows}}$ New, W:Add, Z:Discontinued, F:Interchangeable by set, K:Q'ty Change

Copyright (C) YANMAR GLOBAL CS CO., LTD. All RightsReserved.

# Fig.51. COVER(FRAME FRONT)

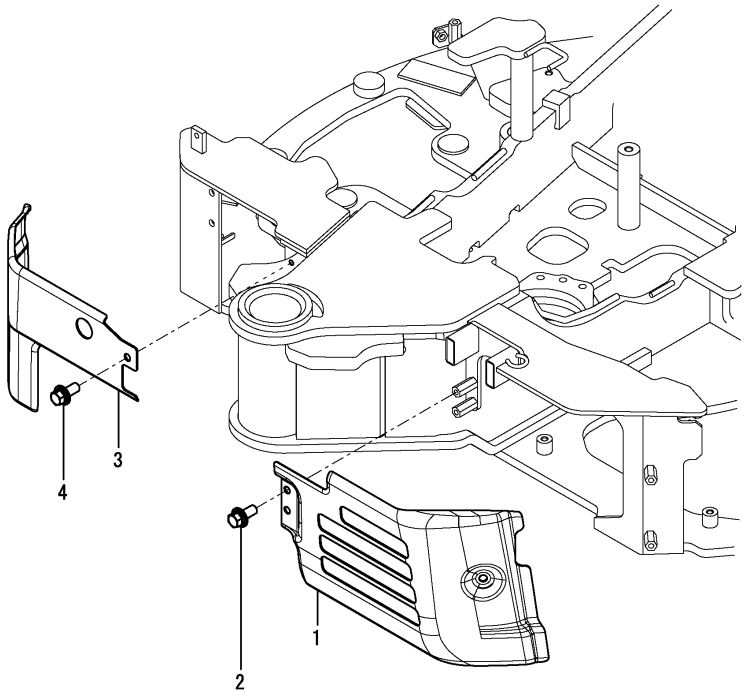




(A)=VIO30-6B P(KR)
(B)=
(C)=
(D)=
(E)=
(F)=

| No. | Lev. | Parts No. | Description | Q'ty (A) | (B) | (C) | (D) | (E) | (F) | I | R |
|---|---|---|---|---|---|---|---|---|---|---|---|
| 1 | 1 | 172B03-61320 | COVER, L T/F | 1 | | | | | | | |
| 2 | 1 | 26014-100252 | BOLT, M10X 25 | 3 | | | | | | | |
| 3 | 1 | 172B03-61380 | COVER, R T/F | 1 | | | | | | | |
| 4 | 1 | 26014-100252 | BOLT, M10X 25 | 2 | | | | | | | |

N:Old $\overset{\text{Yes}}{\underset{\text{No}}{\leftrightarrows}}$ New, Q:Old $\overset{\text{No}}{\underset{\text{Yes}}{\leftrightarrows}}$ New, R:Old $\overset{\text{Yes}}{\underset{\text{Yes}}{\leftrightarrows}}$ New, S:Old $\overset{\text{No}}{\underset{\text{No}}{\leftrightarrows}}$ New, W:Add, Z:Discontinued, F:Interchangeable by set, K:Q'ty Change

Copyright (C) YANMAR GLOBAL CS CO., LTD. All RightsReserved.

# Fig.52. STEP(TO M60543)



(A)=VIO30-6B P(KR)
(B)=
(C)=
(D)=
(E)=
(F)=

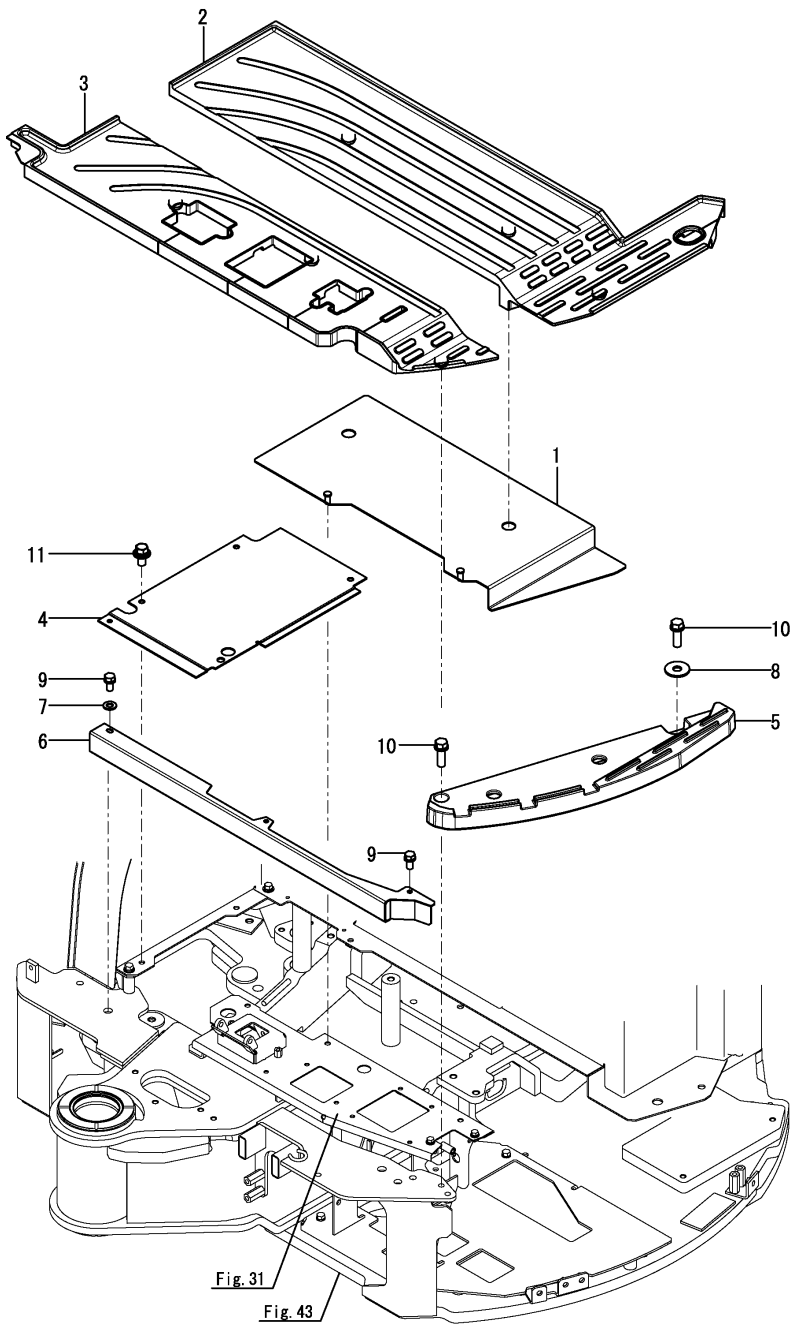


| No. | Lev. | Parts No. | Description | Q'ty (A) | (B) | (C) | (D) | (E) | (F) | I | R |
|---|---|---|---|---|---|---|---|---|---|---|---|
| 1 | 1 | 172B03-62050 | STEP ASSY | 1 | | | | | | | |
| 1-1 | 1 (A=MBF745) | 172B71-62620 | STEP ASSY | 1 | | | | | | | R |
| 2 | 1 | 172B03-62100 | MAT, FLOOR A P | 1 | | | | | | | |
| 3 | 1 | 172B03-62110 | MAT, FLOOR B P | 1 | | | | | | | |
| 4 | 1 | 172B03-62200 | STEP ASSY, CANOPY R | 1 | | | | | | | |
| 5 | 1 | 172B03-62500 | STEP, NON SLIP P | 1 | | | | | | | |
| 6 | 1 | 172B03-62700 | COVER ASSY, CANOPY F | 1 | | | | | | | |
| 7 | 1 | 22137-080000 | WASHER, 8 | 1 | | | | | | | |
| 8 | 1 | 22157-100000 | WASHER, 10 | 1 | | | | | | | |
| 9 | 1 | 26013-080162 | BOLT, M8X 16 | 3 | | | | | | | |
| 10 | 1 | 26013-100302 | BOLT, M10X 30 | 2 | | | | | | | |
| 11 | 1 | 26014-100202 | BOLT, M10X 20 | 4 | | | | | | | |

N:Old $\overset{\text{Yes}}{\underset{\text{No}}{\leftrightarrows}}$ New, Q:Old $\overset{\text{No}}{\underset{\text{Yes}}{\leftrightarrows}}$ New, R:Old $\overset{\text{Yes}}{\underset{\text{Yes}}{\leftrightarrows}}$ New, S:Old $\overset{\text{No}}{\underset{\text{No}}{\leftrightarrows}}$ New, W:Add, Z:Discontinued, F:Interchangeable by set, K:Q'ty Change

Copyright (C) YANMAR GLOBAL CS CO., LTD. All RightsReserved.

# Fig.123. (52A)STEP(P.T.O. HAND OPERATE SPEC.)(FROM M60544)



(A)=VIO30-6B P(KR)
(B)=
(C)=
(D)=
(E)=
(F)=

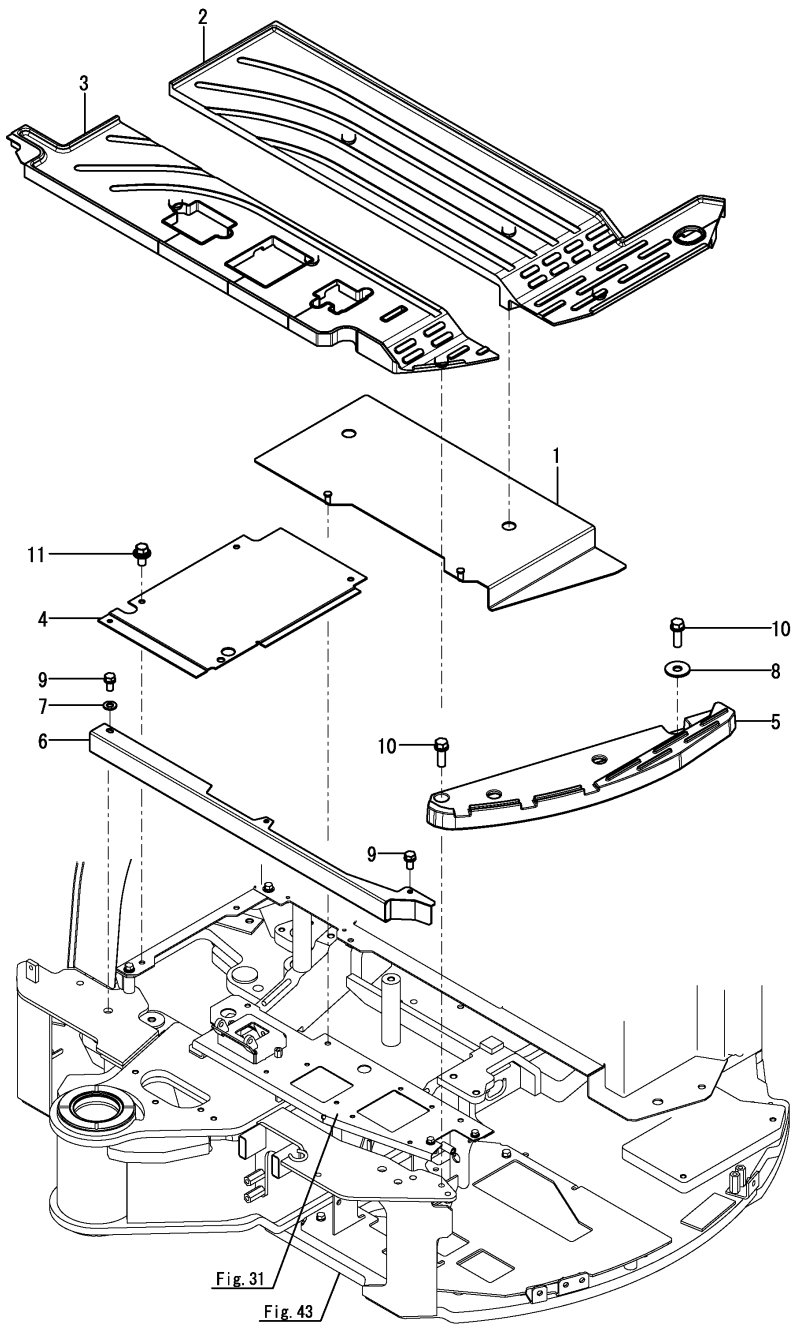


| No. | Lev. | Parts No. | Description | Q'ty (A) | (B) | (C) | (D) | (E) | (F) | I | R |
|---|---|---|---|---|---|---|---|---|---|---|---|
| 1 | 1 | 172B03-62050 | STEP ASSY | 1 | | | | | | | |
| 1-1 | 1 (A=MBF745) | 172B71-62620 | STEP ASSY | 1 | | | | | | | R |
| 2 | 1 | 172B03-62100 | MAT, FLOOR A P | 1 | | | | | | | |
| 3 | 1 | 172B03-62120 | FLOOR MAT, B P EX | 1 | | | | | | | |
| 4 | 1 | 172B03-62200 | STEP ASSY, CANOPY R | 1 | | | | | | | |
| 5 | 1 | 172B03-62500 | STEP, NON SLIP P | 1 | | | | | | | |
| 6 | 1 | 172B03-62700 | COVER ASSY, CANOPY F | 1 | | | | | | | |
| 7 | 1 | 22137-080000 | WASHER, 8 | 1 | | | | | | | |
| 8 | 1 | 22157-100000 | WASHER, 10 | 1 | | | | | | | |
| 9 | 1 | 26013-080162 | BOLT, M8X 16 | 3 | | | | | | | |
| 10 | 1 | 26013-100302 | BOLT, M10X 30 | 2 | | | | | | | |
| 11 | 1 | 26014-100202 | BOLT, M10X 20 | 4 | | | | | | | |

N:Old $\overset{\text{Yes}}{\underset{\text{No}}{\rightleftarrows}}$ New, Q:Old $\overset{\text{No}}{\underset{\text{Yes}}{\rightleftarrows}}$ New, R:Old $\overset{\text{Yes}}{\underset{\text{Yes}}{\rightleftarrows}}$ New, S:Old $\overset{\text{No}}{\underset{\text{No}}{\rightleftarrows}}$ New, W:Add, Z:Discontinued, F:Interchangeable by set, K:Q'ty Change

Copyright (C) YANMAR GLOBAL CS CO., LTD. All RightsReserved.

# Fig.53. COVER(LEVER)



(A)=VIO30-6B P(KR)
(B)=
(C)=
(D)=
(E)=
(F)=

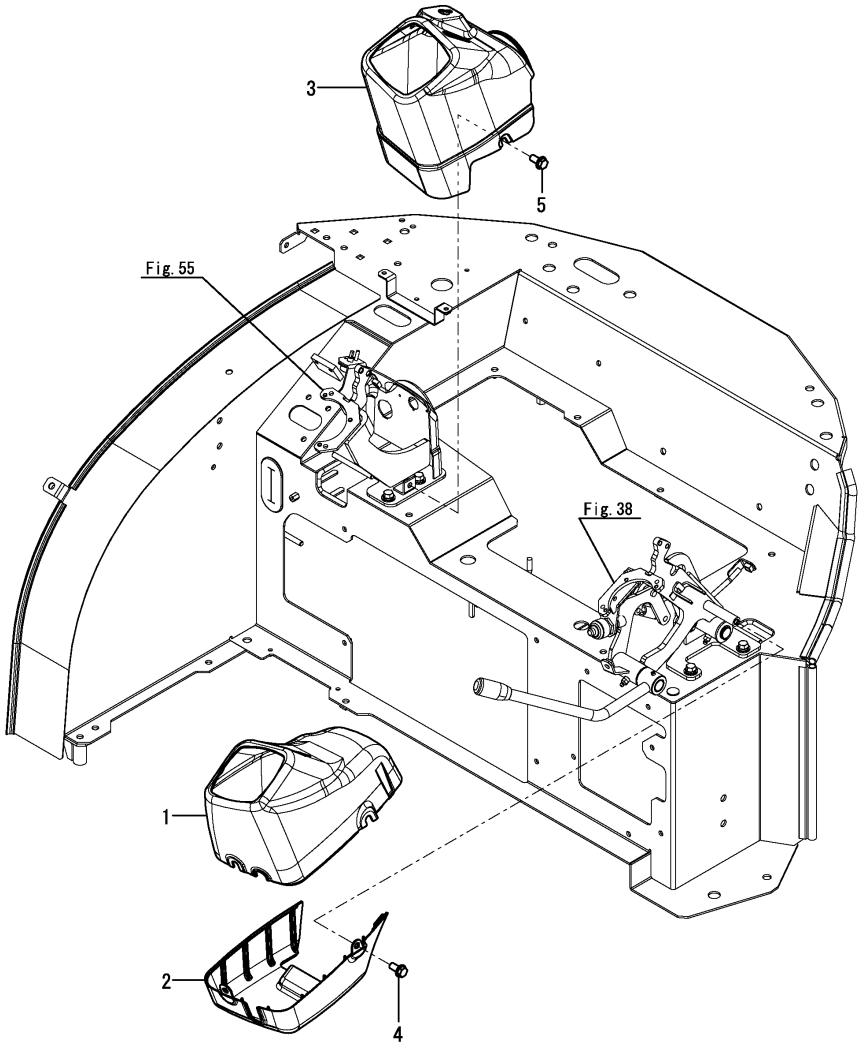


| No. | Lev. | Parts No. | Description | Q'ty (A) | (B) | (C) | (D) | (E) | (F) | I | R |
|---|---|---|---|---|---|---|---|---|---|---|---|
| 1 | 1 | 172B03-63110 | COVER, LEVER L UPPER | 1 | | | | | | | |
| 2 | 1 | 172B03-63120 | COVER, LEVER L LOWER | 1 | | | | | | | |
| 3 | 1 | 172B03-63130 | COVER, LEVER R | 1 | | | | | | | |
| 4 | 1 | 172519-63240 | BOLT, M8X16 | 3 | | | | | | | |
| 5 | 1 | 172519-63240 | BOLT, M8X16 | 2 | | | | | | | |

N:Old $\overset{\text{Yes}}{\underset{\text{No}}{\rightleftarrows}}$ New, Q:Old $\overset{\text{No}}{\underset{\text{Yes}}{\rightleftarrows}}$ New, R:Old $\overset{\text{Yes}}{\underset{\text{Yes}}{\rightleftarrows}}$ New, S:Old $\overset{\text{No}}{\underset{\text{No}}{\rightleftarrows}}$ New, W:Add, Z:Discontinued, F:Interchangeable by set, K:Q'ty Change

Copyright (C) YANMAR GLOBAL CS CO., LTD. All RightsReserved.

# Fig.54. COVER(MONITOR)



(A)=VIO30-6B P(KR)
(B)=
(C)=
(D)=
(E)=
(F)=

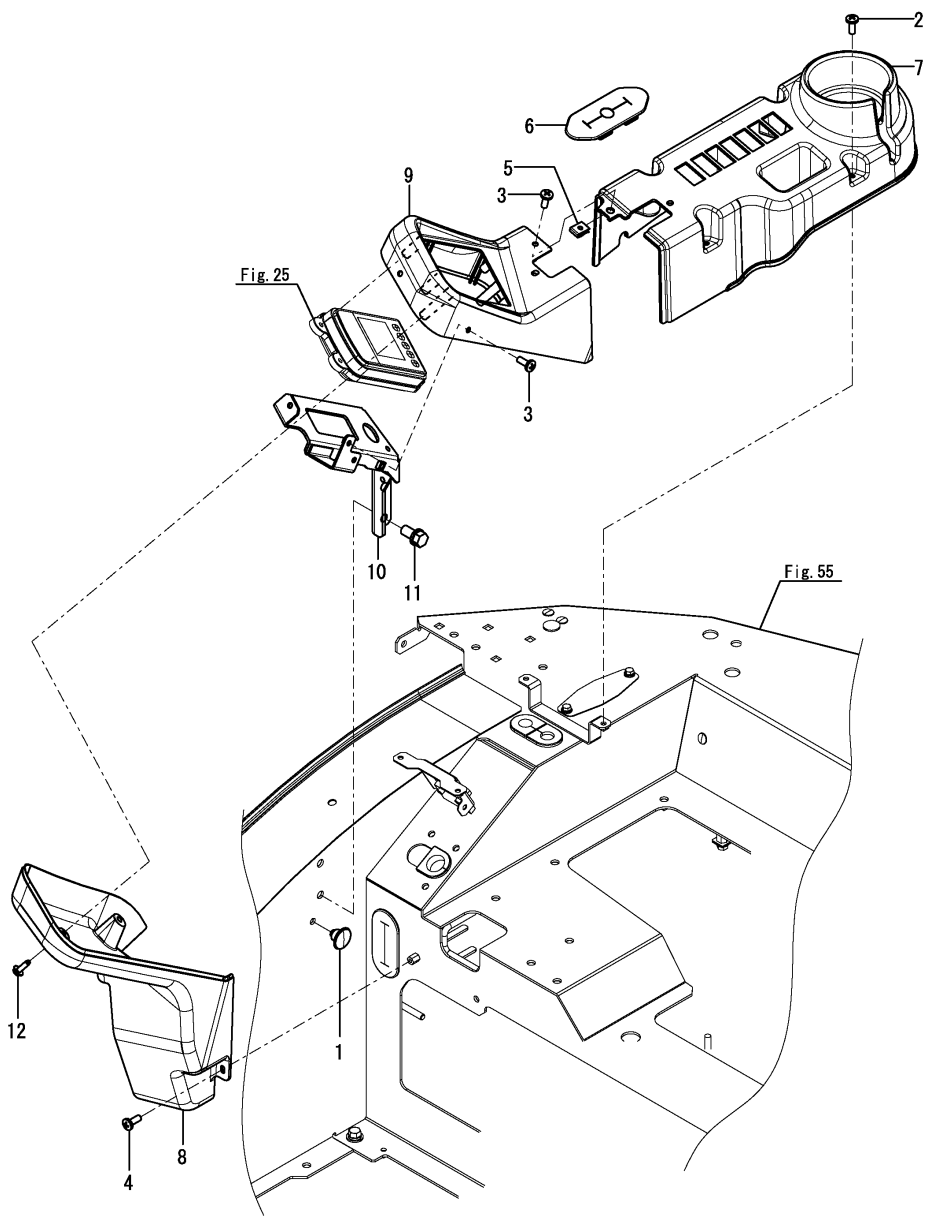


| No. | Lev. | Parts No. | Description | Q'ty (A) | (B) | (C) | (D) | (E) | (F) | I | R |
|---|---|---|---|---|---|---|---|---|---|---|---|
| 1 | 1 | 172444-17660 | CLIP, TREE 8 | 1 | | | | | | | |
| 2 | 1 | 172137-46210 | SCREW, BIND | 4 | | | | | | | |
| 3 | 1 | 172137-46210 | SCREW, BIND | 3 | | | | | | | |
| 4 | 1 | 172137-46210 | SCREW, BIND | 1 | | | | | | | |
| 5 | 1 | 198071-61890 | NUT, SPEED M6 | 1 | | | | | | | |
| 6 | 1 | 172B03-63050 | GROMMET, BRADE | 1 | | | | | | | |
| 7 | 1 | 172B03-63210 | COVER, SWITCH | 1 | | | | | | | |
| 8 | 1 | 172B03-63220 | COVER, PANEL LOWER | 1 | | | | | | | |
| 9 | 1 | 172B03-63270 | COVER, PANEL UPPER | 1 | | | | | | | |
| 10 | 1 | 172B03-63500 | STAY ASSY, PANEL | 1 | | | | | | | |
| 11 | 1 | 26013-100202 | BOLT, M10X 20 | 2 | | | | | | | |
| 12 | 1 | 26476-050142 | SCREW, TAPPING M5X14 | 2 | | | | | | | |

N:Old $\overset{\text{Yes}}{\underset{\text{No}}{\rightleftarrows}}$ New, Q:Old $\overset{\text{No}}{\underset{\text{Yes}}{\rightleftarrows}}$ New, R:Old $\overset{\text{Yes}}{\underset{\text{Yes}}{\rightleftarrows}}$ New, S:Old $\overset{\text{No}}{\underset{\text{No}}{\rightleftarrows}}$ New, W:Add, Z:Discontinued, F:Interchangeable by set, K:Q'ty Change

Copyright (C) YANMAR GLOBAL CS CO., LTD. All RightsReserved.

# Fig.55. SEAT MOUNT



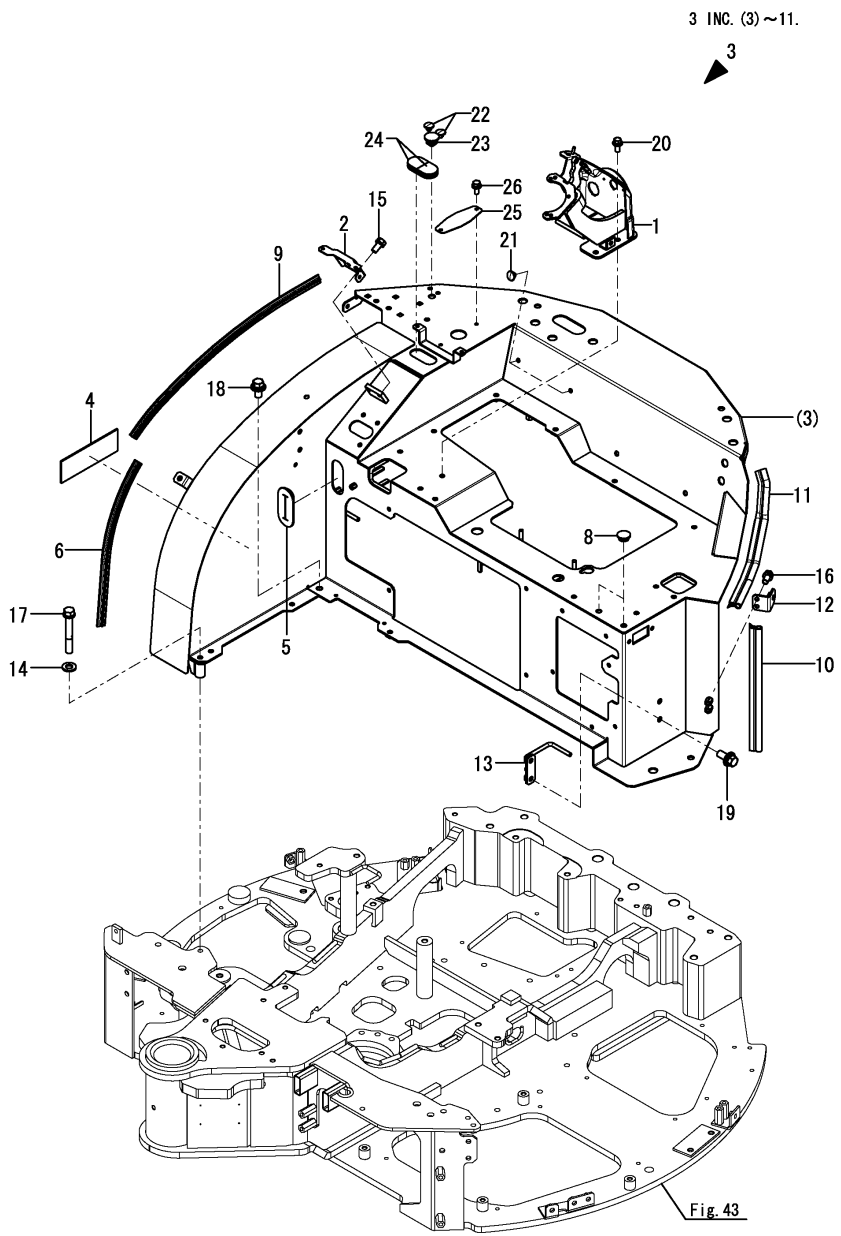


(A)=VIO30-6B P(KR)
(B)=
(C)=
(D)=
(E)=
(F)=

| No. | Lev. | Parts No. | Description | Q'ty (A) | (B) | (C) | (D) | (E) | (F) | I | R |
|---|---|---|---|---|---|---|---|---|---|---|---|
| 1 | 1 | 172B03-46400 | STAND ASSY, LEVER R | 1 | | | | | | | |
| 2 | 1 | 172B03-63400 | STAY ASSY, COVER | 1 | | | | | | | |
| 3 | 1 | 172B03-64200 | MOUNT ASSY, SEAT | 1 | | | | | | | |
| 3-1 | 1 | 172B03-64201 | MOUNT ASSY, SEAT | 1 | | | | | | N | |
| | (A=MBF454) | | | | | | | | | | |
| 3-2 | 1 | 172B03-64202 | MOUNT ASSY, SEAT | 1 | | | | | | N | |
| | (A=MBF600) | | | | | | | | | | |
| 4 | 2 | 172446-62910 | PLATE, RUBBER A | 1 | | | | | | | |
| 5 | 2 | 172B03-63450 | GROMMET, CABLE | 1 | | | | | | | |
| 6 | 2 | 172B03-64190 | RUBBER, SEAL 420 | 1 | | | | | | | |
| 8 | 2 | 172187-64900 | PLUG | 2 | | | | | | | |
| 9 | 2 | 172538-65320 | RUBBER, SEAL 625 | 1 | | | | | | | |
| 10 | 2 | 172164-66480 | RUBBER, EDGE 340 | 1 | | | | | | | |
| 11 | 2 | 172164-66640 | RUBBER, SEAL 400 | 1 | | | | | | | |
| 12 | 1 | 172B03-64450 | STAY ASSY, BONNET L | 1 | | | | | | | |
| 13 | 1 | 172B03-78050 | GUIDE ASSY, HOSE | 1 | | | | | | | |
| 14 | 1 | 22137-100000 | WASHER, 10 | 1 | | | | | | | |
| 15 | 1 | 26013-080162 | BOLT, M8X 16 | 2 | | | | | | | |
| 16 | 1 | 26013-080162 | BOLT, M8X 16 | 2 | | | | | | | |
| 17 | 1 | 26013-100702 | BOLT, M10X 70 | 1 | | | | | | | |
| 18 | 1 | 26014-100202 | BOLT, M10X 20 | 1 | | | | | | | |
| 19 | 1 | 26014-100252 | BOLT, M10X 25 | 2 | | | | | | | |
| 20 | 1 | 26014-100252 | BOLT, M10X 25 | 3 | | | | | | | |
| 21 | 1 | 172444-17660 | CLIP, TREE 8 | 2 | | | | | | | |
| 22 | 1 | 172444-17660 | CLIP, TREE 8 | 2 | | | | | | | |
| 23 | 1 | 1E8080-78890 | PLUG, 14 | 1 | | | | | | | |
| 24 | 1 | 172165-62830 | GROMMET | 2 | | | | | | | |
| 25 | 1 | 172B03-64990 | PLATE, COVER | 1 | | | | | | | |
| 26 | 1 | 26014-060162 | BOLT, M6X 16 | 2 | | | | | | | |

N:Old $\overset{\text{Yes}}{\underset{\text{No}}{\rightleftarrows}}$ New, Q:Old $\overset{\text{No}}{\underset{\text{Yes}}{\rightleftarrows}}$ New, R:Old $\overset{\text{Yes}}{\underset{\text{Yes}}{\rightleftarrows}}$ New, S:Old $\overset{\text{No}}{\underset{\text{No}}{\rightleftarrows}}$ New, W:Add, Z:Discontinued, F:Interchangeable by set, K:Q'ty Change

Copyright (C) YANMAR GLOBAL CS CO., LTD. All RightsReserved.

# Fig.56. SEAT MOUNT(COVER)



(A)=VIO30-6B P(KR)
(B)=
(C)=
(D)=
(E)=
(F)=

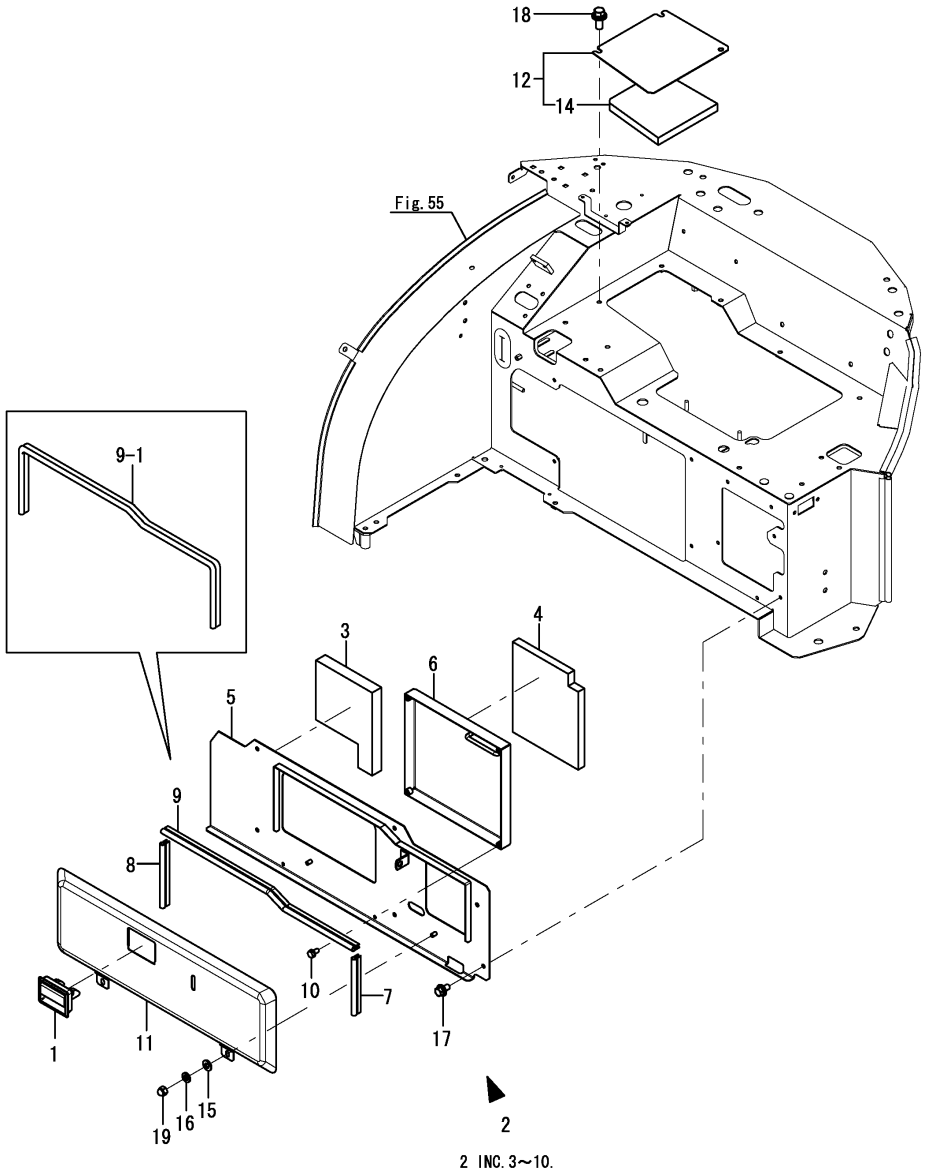


| No. | Lev. | Parts No. | Description | Q'ty (A) | (B) | (C) | (D) | (E) | (F) | I | R |
|---|---|---|---|---|---|---|---|---|---|---|---|
| 1 | 1 | 172187-61421 | HANDLE, LOCK | 1 | | | | | | | |
| 2 | 1 | 172B03-64500 | COVER ASSY, MANUAL | 1 | | | | | | | |
| 3 | 2 | 172B03-64070 | SPONGE, COVER A | 1 | | | | | | | |
| 4 | 2 | 172B03-64080 | SPONGE, COVER B | 1 | | | | | | | |
| 5 | 2 | 172B03-64510 | COVER ASSY, MANUAL | 1 | | | | | | | |
| 6 | 2 | 172B03-64570 | BOX ASSY, MANUAL | 1 | | | | | | | |
| 7 | 2 | 172B03-64680 | SEAL, 155 | 1 | | | | | | Z | |
| | (A=*2014.05) | | | | | | | | | | |
| 8 | 2 | 172B03-64690 | SEAL, 175 | 1 | | | | | | Z | |
| | (A=*2014.05) | | | | | | | | | | |
| 9 | 2 | 172A64-64910 | SEAL, 600 | 1 | | | | | | | |
| 9-1 | 2 | 172458-65070 | SEAL, 945 | 1 | | | | | | N | |
| | (A=*2014.05) | | | | | | | | | | |
| 10 | 2 | 26013-060122 | BOLT, M6X 12 | 4 | | | | | | | |
| 11 | 1 | 172B03-64600 | COVER ASSY, MANUAL B | 1 | | | | | | | |
| 12 | 1 | 172B03-64650 | COVER ASSY, ENGINE | 1 | | | | | | | |
| 14 | 2 | 172B03-64670 | SPONGE, ENGINE | 1 | | | | | | | |
| 15 | 1 | 22137-080000 | WASHER, 8 | 2 | | | | | | | |
| 16 | 1 | 22217-080000 | WASHER, SPRING 8 | 2 | | | | | | | |
| 17 | 1 | 26014-080162 | BOLT, M8X 16 | 6 | | | | | | | |
| 18 | 1 | 26014-100252 | BOLT, M10X 25 | 2 | | | | | | | |
| 19 | 1 | 26657-080002 | NUT, CAP M8 | 2 | | | | | | | |

N:Old $\overset{\text{Yes}}{\underset{\text{No}}{\leftrightarrows}}$ New, Q:Old $\overset{\text{No}}{\underset{\text{Yes}}{\leftrightarrows}}$ New, R:Old $\overset{\text{Yes}}{\underset{\text{Yes}}{\leftrightarrows}}$ New, S:Old $\overset{\text{No}}{\underset{\text{No}}{\leftrightarrows}}$ New, W:Add, Z:Discontinued, F:Interchangeable by set, K:Q'ty Change

Copyright (C) YANMAR GLOBAL CS CO., LTD. All RightsReserved.

# Fig.57. SEAT



(A)=VIO30-6B P(KR)
(B)=
(C)=
(D)=
(E)=
(F)=

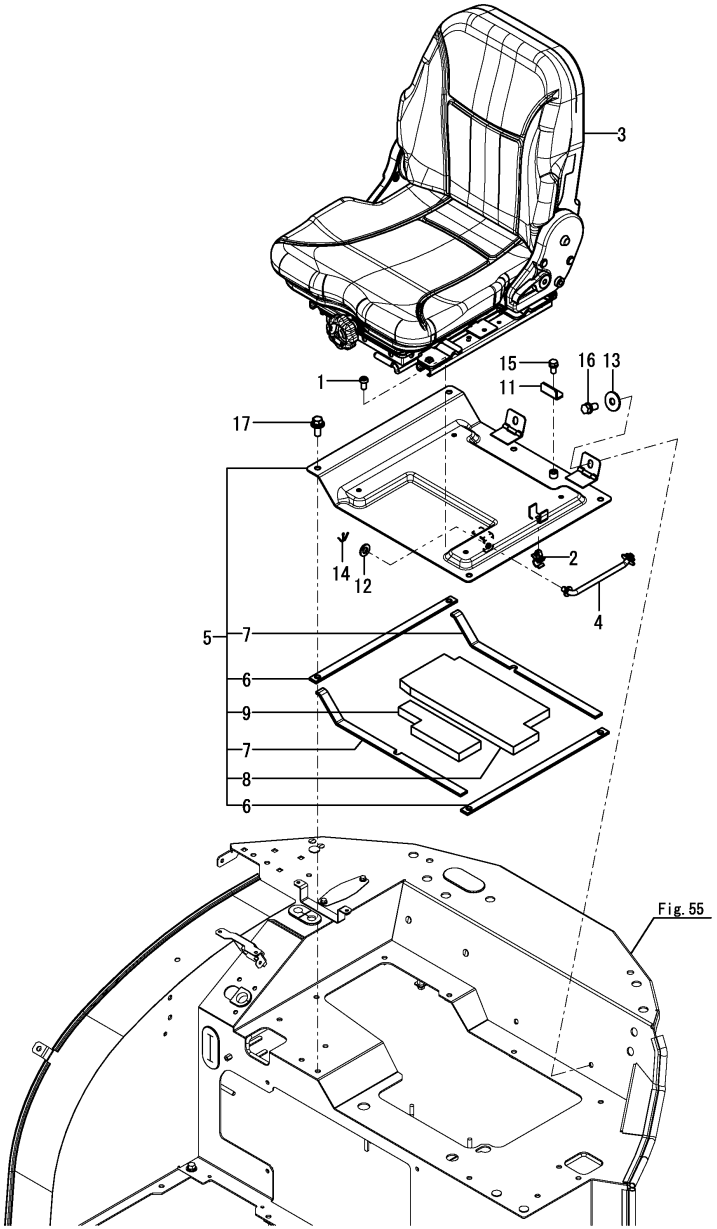


| No. | Lev. | Parts No. | Description | Q'ty (A) | (B) | (C) | (D) | (E) | (F) | I | R |
|---|---|---|---|---|---|---|---|---|---|---|---|
| 1 | 1 | 172455-61710 | BOLT, BUTTON 8X16 | 4 | | | | | | | |
| 2 | 1 | 1A7610-62250 | HOLDER, ROD 10 | 1 | | | | | | | |
| 3 | 1 | 172B02-64800 | SEAT ASSY, SUS | 1 | | | | | | | 1 |
| 4 | 1 | 172B03-64830 | ROD ASSY, STOPPER | 1 | | | | | | | |
| 4-1 | 1 | 172B03-64831 | ROD ASSY, STOPPER | 1 | | | | | | N | |
| | (A=M60513) | | | | | | | | | | |
| 4-2 | 1 | 172B03-64832 | ROD ASSY, STOPPER | 1 | | | | | | N | |
| | (A=MBF600) | | | | | | | | | | |
| 5 | 1 | 172B03-64850 | PLATE ASSY, SEAT SUS | 1 | | | | | | | |
| 6 | 2 | 172B03-64010 | SEAL, SEAT | 2 | | | | | | | |
| 7 | 2 | 172B03-64020 | SEAL, SEAT | 2 | | | | | | | |
| 8 | 2 | 172B03-64030 | SPONGE, SEAT SUS A | 1 | | | | | | | |
| 9 | 2 | 172B03-64040 | SPONGE, SEAT SUS B | 1 | | | | | | | |
| 11 | 1 | 172B03-64960 | PLATE, STOPPER | 1 | | | | | | | |
| 12 | 1 | 22137-100000 | WASHER, 10 | 1 | | | | | | | |
| 13 | 1 | 22157-100000 | WASHER, 10 | 2 | | | | | | | |
| 14 | 1 | 22417-200200 | PIN, COTTER 2.0X20 | 1 | | | | | | | |
| 15 | 1 | 26013-080162 | BOLT, M8X 16 | 1 | | | | | | | |
| 16 | 1 | 26013-100202 | BOLT, M10X 20 | 2 | | | | | | | |
| 17 | 1 | 26014-100252 | BOLT, M10X 25 | 5 | | | | | | | |

Remarks
(1)Inner parts are shown in Fig.58.

N:Old $\overset{\text{Yes}}{\underset{\text{No}}{\leftrightarrows}}$ New, Q:Old $\overset{\text{No}}{\underset{\text{Yes}}{\leftrightarrows}}$ New, R:Old $\overset{\text{Yes}}{\underset{\text{Yes}}{\leftrightarrows}}$ New, S:Old $\overset{\text{No}}{\underset{\text{No}}{\leftrightarrows}}$ New, W:Add, Z:Discontinued, F:Interchangeable by set, K:Q'ty Change

Copyright (C) YANMAR GLOBAL CS CO., LTD. All RightsReserved.

# Fig.58. SEAT(INNER PARTS)



(A)=VIO30-6B P(KR)
(B)=
(C)=
(D)=
(E)=
(F)=

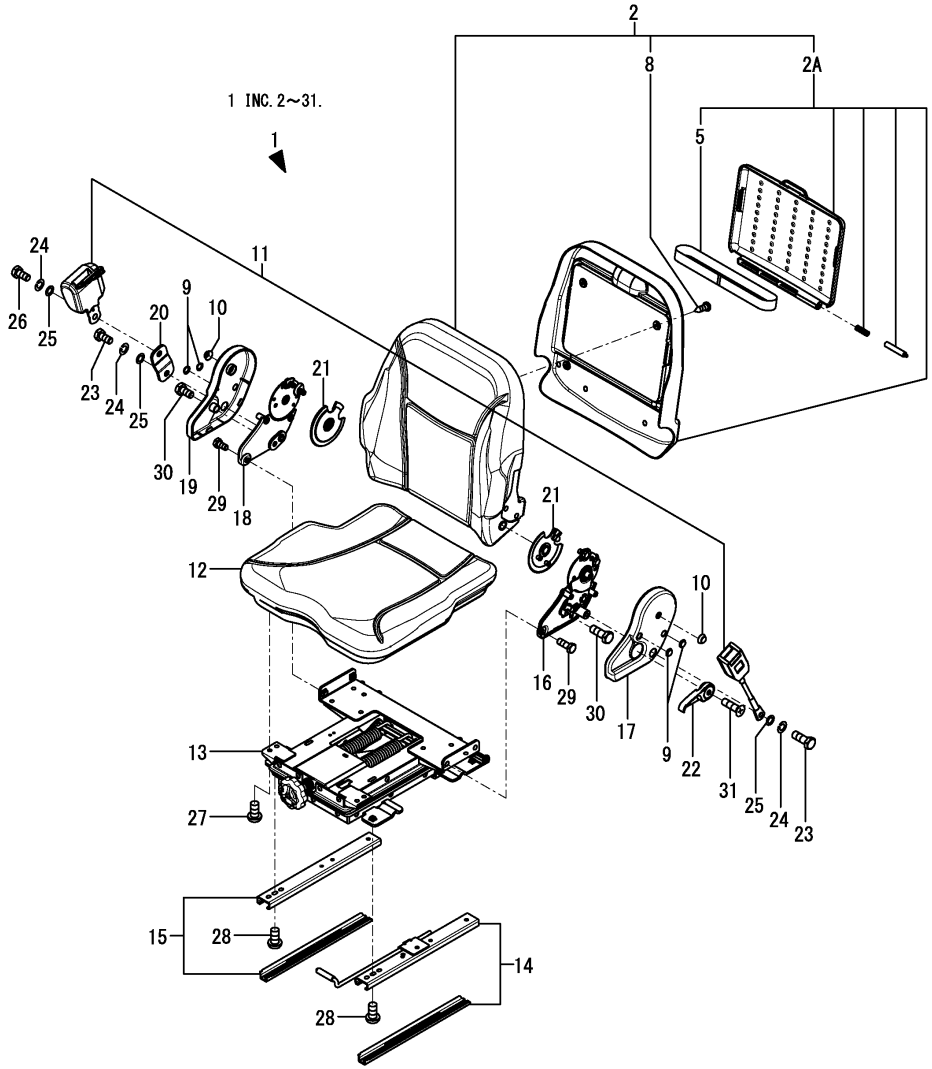


| No. | Lev. | Parts No. | Description | Q'ty (A) | (B) | (C) | (D) | (E) | (F) | I | R |
|---|---|---|---|---|---|---|---|---|---|---|---|
| 1 | 1 | 172B02-64800 | SEAT ASSY, SUS | 1 | | | | | | | |
| 2 | 2 | 172B02-64210 | SEAT ASSY, BACK | 1 | | | | | | | |
| 2A | 3 | 172B02-64270 | BOX ASSY,MANUAL | 1 | | | | | | W | |
| | (A=*2017.04.) | | | | | | | | | | |
| 5 | 4 | 172A89-64950 | BAND | 1 | | | | | | | |
| 8 | 3 | 22859-500160 | SCREW, 5X16 | 4 | | | | | | | |
| 8-1 | 3 | 22859-500200 | SCREW, 5.0 X 20 | 4 | | | | | | N | |
| | (A=*2017.04.) | | | | | | | | | | |
| 9 | 2 | 172B02-64250 | CAP, B | 4 | | | | | | | |
| 10 | 2 | 172B02-64260 | CAP, C | 2 | | | | | | | |
| 11 | 2 | 172A89-64740 | SEATBELT ASSY | 1 | | | | | | | |
| 12 | 2 | 172A89-64780 | SEAT, CUSHION | 1 | | | | | | | |
| 13 | 2 | 172A89-64790 | SEAT, SPRING | 1 | | | | | | | |
| 14 | 2 | 172A89-64800 | RAIL ASSY, TL | 1 | | | | | | | |
| 15 | 2 | 172A89-64810 | RAIL ASSY, TR | 1 | | | | | | | |
| 16 | 2 | 172A89-64820 | HINGE ASSY | 1 | | | | | | | |
| 17 | 2 | 172A89-64830 | COVER | 1 | | | | | | | |
| 18 | 2 | 172A89-64840 | HINGE ASSY | 1 | | | | | | | |
| 19 | 2 | 172A89-64850 | COVER | 1 | | | | | | | |
| 20 | 2 | 172A89-64860 | BRACKET ASSY | 1 | | | | | | | |
| 21 | 2 | 172A89-64870 | COVER | 2 | | | | | | | |
| 22 | 2 | 172A89-64880 | LEVER | 1 | | | | | | | |
| 23 | 2 | 172A89-64890 | BOLT | 2 | | | | | | | |
| 24 | 2 | 172A89-64900 | SPRING | 3 | | | | | | | |
| 25 | 2 | 172A89-64910 | WASHER | 3 | | | | | | | |
| 26 | 2 | 172A89-64920 | BOLT | 1 | | | | | | | |
| 27 | 2 | 26106-080162 | BOLT, M8X 16 PLATED | 4 | | | | | | | |
| 28 | 2 | 26106-080162 | BOLT, M8X 16 PLATED | 4 | | | | | | | |
| 29 | 2 | 26106-100162 | BOLT, M10X 16 PLATED | 6 | | | | | | | |
| 30 | 2 | 26106-100252 | BOLT, M10X 25 PLATED | 2 | | | | | | | |
| 31 | 2 | 26559-050202 | SCREW, M5X20 | 1 | | | | | | | |

N:Old $\overset{\text{Yes}}{\underset{\text{No}}{\rightleftarrows}}$ New, Q:Old $\overset{\text{No}}{\underset{\text{Yes}}{\rightleftarrows}}$ New, R:Old $\overset{\text{Yes}}{\underset{\text{Yes}}{\rightleftarrows}}$ New, S:Old $\overset{\text{No}}{\underset{\text{No}}{\rightleftarrows}}$ New, W:Add, Z:Discontinued, F:Interchangeable by set, K:Q'ty Change

Copyright (C) YANMAR GLOBAL CS CO., LTD. All RightsReserved.

# Fig.59. HANDRAIL



(A)=VIO30-6B P(KR)
(B)=
(C)=
(D)=
(E)=
(F)=

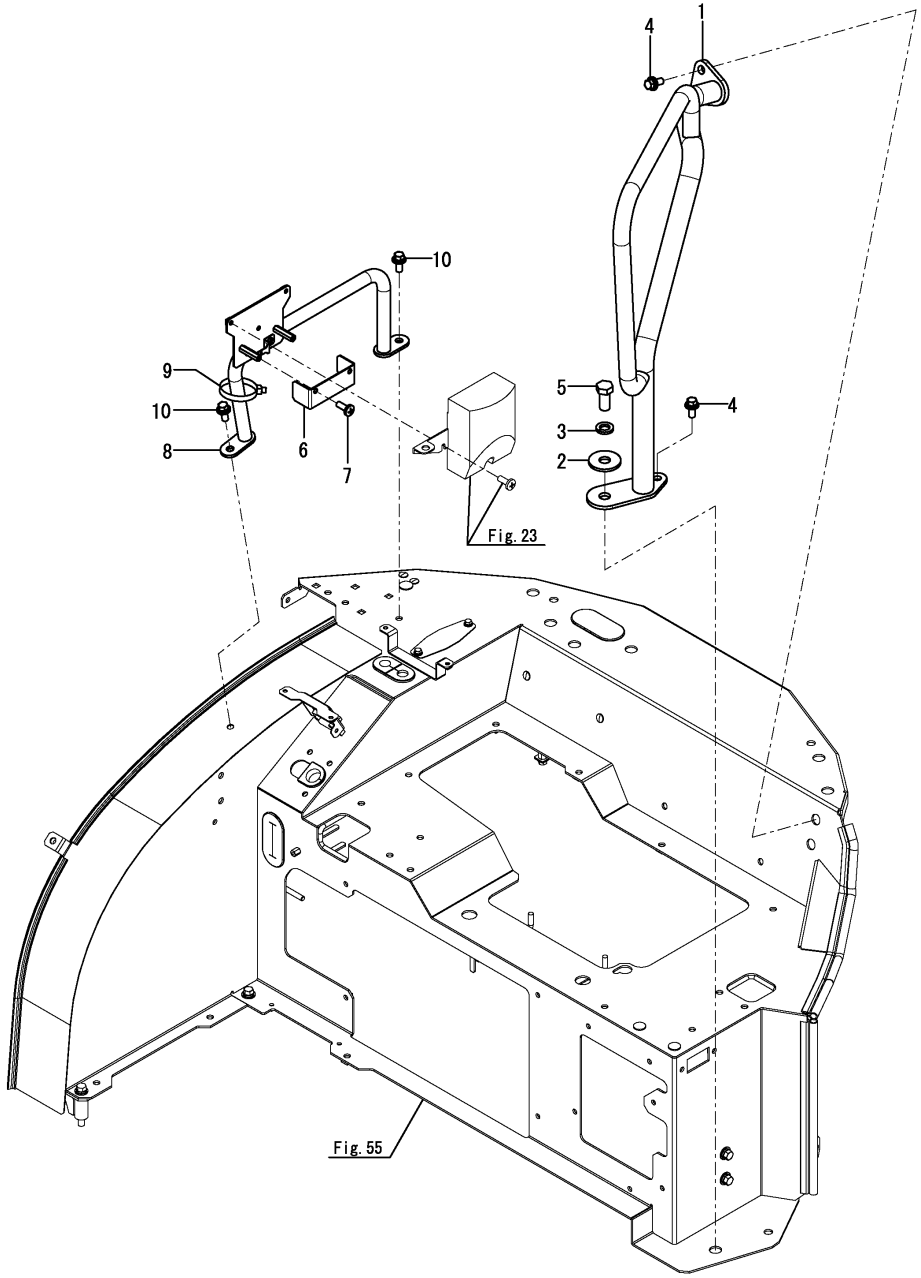


| No. | Lev. | Parts No. | Description | Q'ty (A) | (B) | (C) | (D) | (E) | (F) | I | R |
|---|---|---|---|---|---|---|---|---|---|---|---|
| 1 | 1 | 172B03-64700 | HANDRAIL ASSY, L | 1 | | | | | | | |
| 2 | 1 | 22157-160000 | WASHER, 16 | 1 | | | | | | | |
| 3 | 1 | 22217-160000 | WASHER, SPRING 16 | 1 | | | | | | | |
| 4 | 1 | 26014-100252 | BOLT, M10X 25 | 3 | | | | | | | |
| 5 | 1 | 26116-160352 | BOLT, M16X 35 PLATED | 1 | | | | | | | |
| 6 | 1 | 172B03-17990 | COVER, CONNECTOR | 1 | | | | | | | |
| 7 | 1 | 172137-46210 | SCREW, BIND | 2 | | | | | | | |
| 8 | 1 | 172B03-64780 | HANDRAIL ASSY, R-Q | 1 | | | | | | | |
| 9 | 1 | 172122-79940 | CLIP, HOSE C | 1 | | | | | | | |
| 10 | 1 | 26014-100252 | BOLT, M10X 25 | 2 | | | | | | | |

N:Old $\overset{\text{Yes}}{\underset{\text{No}}{\rightleftarrows}}$ New, Q:Old $\overset{\text{No}}{\underset{\text{Yes}}{\rightleftarrows}}$ New, R:Old $\overset{\text{Yes}}{\underset{\text{Yes}}{\rightleftarrows}}$ New, S:Old $\overset{\text{No}}{\underset{\text{No}}{\rightleftarrows}}$ New, W:Add, Z:Discontinued, F:Interchangeable by set, K:Q'ty Change

Copyright (C) YANMAR GLOBAL CS CO., LTD. All RightsReserved.

# Fig.60. BONNET(REAR)



(A)=VIO30-6B P(KR)
(B)=
(C)=
(D)=
(E)=
(F)=

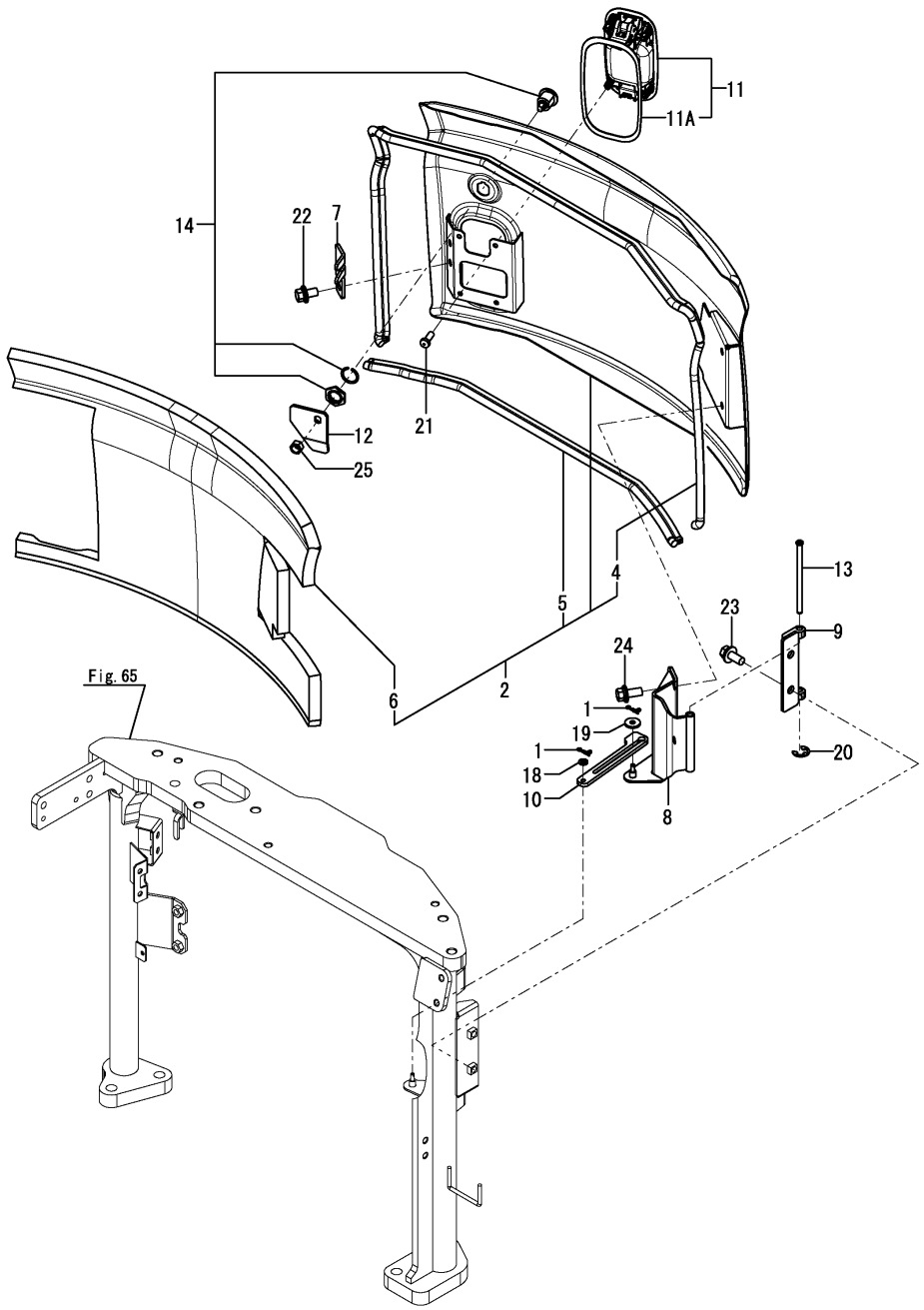


| No. | Lev. | Parts No. | Description | Q'ty (A) | (B) | (C) | (D) | (E) | (F) | I | R |
|---|---|---|---|---|---|---|---|---|---|---|---|
| 1 | 1 | 1C6281-52310 | PIN, SNAP 6 | 2 | | | | | | | |
| 2 | 1 | 172B03-65100 | BONNET ASSY, A | 1 | | | | | | | |
| 4 | 2 | 172B03-65320 | SEAL, 1625 | 1 | | | | | | | |
| 5 | 2 | 172B03-65330 | SEAL, 735 | 1 | | | | | | | |
| 6 | 2 | 172B03-65340 | SPONGE, BONNET A | 1 | | | | | | | |
| 7 | 1 | 172B03-65170 | GUIDE, BONNET | 1 | | | | | | | |
| 8 | 1 | 172B03-65200 | HINGE ASSY, B | 1 | | | | | | | |
| 9 | 1 | 172B03-65250 | HINGE ASSY, A | 1 | | | | | | | |
| 10 | 1 | 172B03-65290 | GUIDE, LOCK | 1 | | | | | | | |
| 11 | 1 | 172B03-65310 | HANDLE, LOCK | 1 | | | | | | | |
| 11A | 2 | 172B02-65350 | SEAL | 1 | | | | | | W | |
| | (A=MXXXXX) | | | | | | | | | | |
| 12 | 1 | 172B03-65391 | PLATE, KEY LOCK | 1 | | | | | | | |
| 13 | 1 | 172448-65490 | SHAFT, HINGE | 1 | | | | | | | |
| 14 | 1 | 172B03-66170 | CYLINDER ASSY, KEY | 1 | | | | | | | |
| 18 | 1 | 22117-060000 | WASHER, 6 | 1 | | | | | | | |
| 19 | 1 | 22157-060000 | WASHER, 6 | 1 | | | | | | | |
| 20 | 1 | 22272-000070 | RING, E- 7 | 1 | | | | | | | |
| 21 | 1 | 22857-600160 | SCREW, 6X16 | 4 | | | | | | | |
| 22 | 1 | 26014-100202 | BOLT, M10X 20 | 2 | | | | | | | |
| 23 | 1 | 26014-100252 | BOLT, M10X 25 | 2 | | | | | | | |
| 24 | 1 | 26014-100252 | BOLT, M10X 25 | 2 | | | | | | | |
| 25 | 1 | 26347-100002 | NUT, M10 | 1 | | | | | | | |

N:Old $\overset{\text{Yes}}{\underset{\text{No}}{\rightleftarrows}}$ New, Q:Old $\overset{\text{No}}{\underset{\text{Yes}}{\rightleftarrows}}$ New, R:Old $\overset{\text{Yes}}{\underset{\text{Yes}}{\rightleftarrows}}$ New, S:Old $\overset{\text{No}}{\underset{\text{No}}{\rightleftarrows}}$ New, W:Add, Z:Discontinued, F:Interchangeable by set, K:Q'ty Change

Copyright (C) YANMAR GLOBAL CS CO., LTD. All RightsReserved.

# Fig.61. BONNET(FRONT)



(A)=VIO30-6B P(KR)
(B)=
(C)=
(D)=
(E)=
(F)=

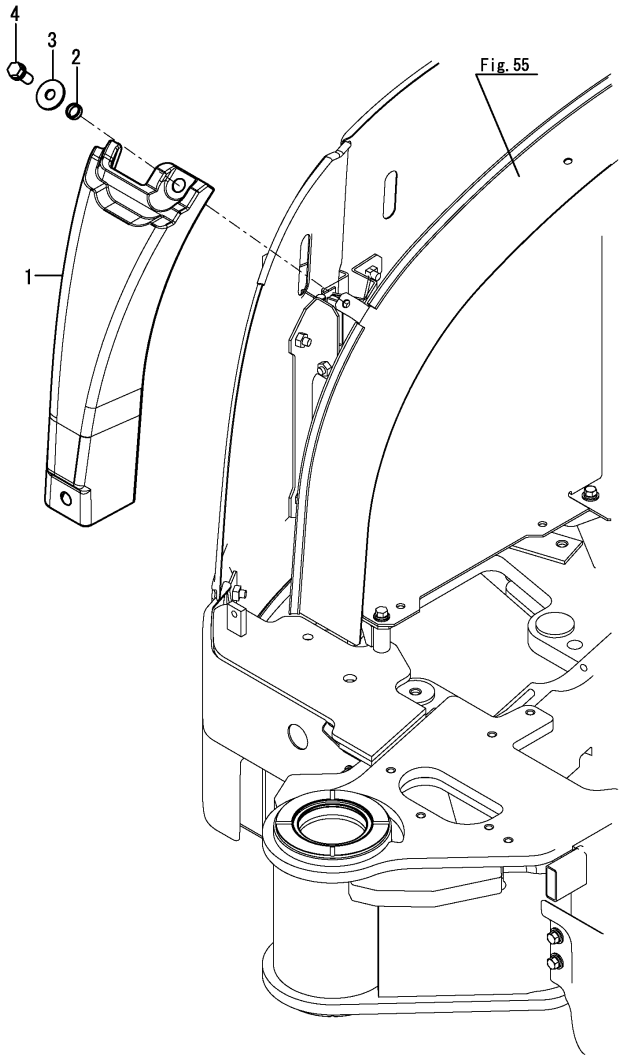


| No. | Lev. | Parts No. | Description | Q'ty (A) | (B) | (C) | (D) | (E) | (F) | I | R |
|---|---|---|---|---|---|---|---|---|---|---|---|
| 1 | 1 | 172B03-65410 | BONNET, B | 1 | | | | | | | |
| 2 | 1 | 172A47-65550 | COLLAR, 13X16X5 | 2 | | | | | | | |
| 3 | 1 | 22157-100000 | WASHER, 10 | 2 | | | | | | | |
| 4 | 1 | 26013-100252 | BOLT, M10X 25 | 2 | | | | | | | |

N:Old $\overset{\text{Yes}}{\underset{\text{No}}{\leftrightarrows}}$ New, Q:Old $\overset{\text{No}}{\underset{\text{Yes}}{\leftrightarrows}}$ New, R:Old $\overset{\text{Yes}}{\underset{\text{Yes}}{\leftrightarrows}}$ New, S:Old $\overset{\text{No}}{\underset{\text{No}}{\leftrightarrows}}$ New, W:Add, Z:Discontinued, F:Interchangeable by set, K:Q'ty Change

Copyright (C) YANMAR GLOBAL CS CO., LTD. All RightsReserved.

# Fig.62. BONNET(LEFT)



(A)=VIO30-6B P(KR)
(B)=
(C)=
(D)=
(E)=
(F)=

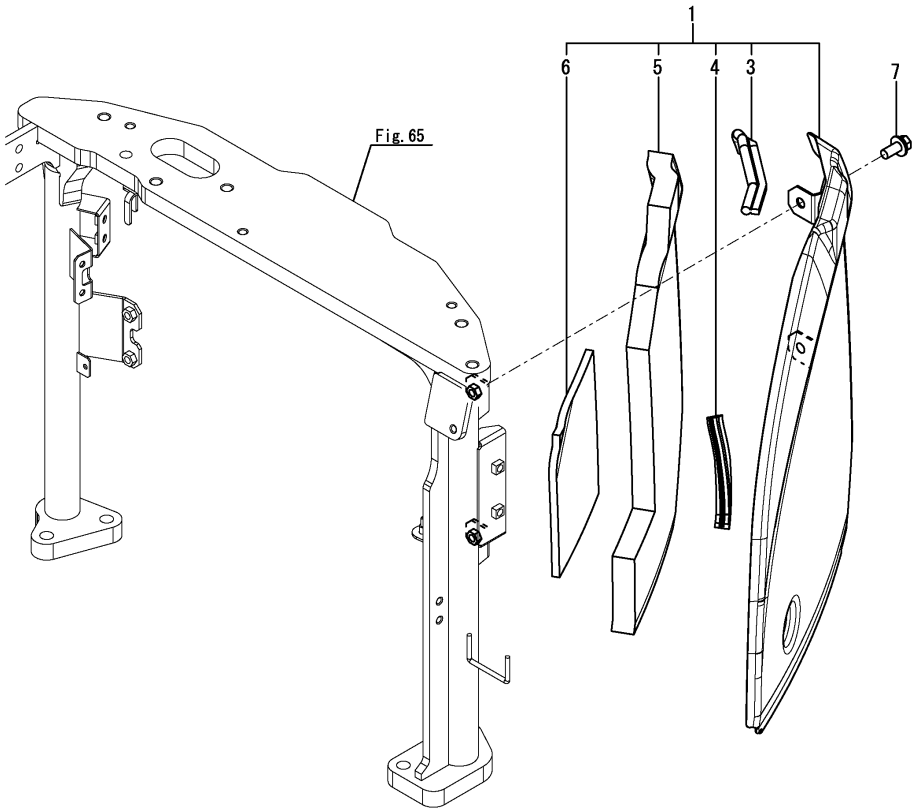


| No. | Lev. | Parts No. | Description | Q'ty (A) | (B) | (C) | (D) | (E) | (F) | I | R |
|---|---|---|---|---|---|---|---|---|---|---|---|
| 1 | 1 | 172B03-65600 | BONNET ASSY, L | 1 | | | | | | | |
| 3 | 2 | 172B03-65650 | SEAL, 220 | 1 | | | | | | | |
| 4 | 2 | 172B03-65660 | SEAL, 175 | 1 | | | | | | | |
| 5 | 2 | 172B03-65670 | SPONGE, BONNET L A | 1 | | | | | | | |
| 6 | 2 | 172B03-65680 | SPONGE, BONNET L B | 1 | | | | | | | |
| 7 | 1 | 26014-100252 | BOLT, M10X 25 | 3 | | | | | | | |

N:Old $\overset{\text{Yes}}{\underset{\text{No}}{\leftrightarrows}}$ New, Q:Old $\overset{\text{No}}{\underset{\text{Yes}}{\leftrightarrows}}$ New, R:Old $\overset{\text{Yes}}{\underset{\text{Yes}}{\leftrightarrows}}$ New, S:Old $\overset{\text{No}}{\underset{\text{No}}{\leftrightarrows}}$ New, W:Add, Z:Discontinued, F:Interchangeable by set, K:Q'ty Change

Copyright (C) YANMAR GLOBAL CS CO., LTD. All RightsReserved.

# Fig.63. BONNET(RIGHT)



(A)=VIO30-6B P(KR)
(B)=
(C)=
(D)=
(E)=
(F)=

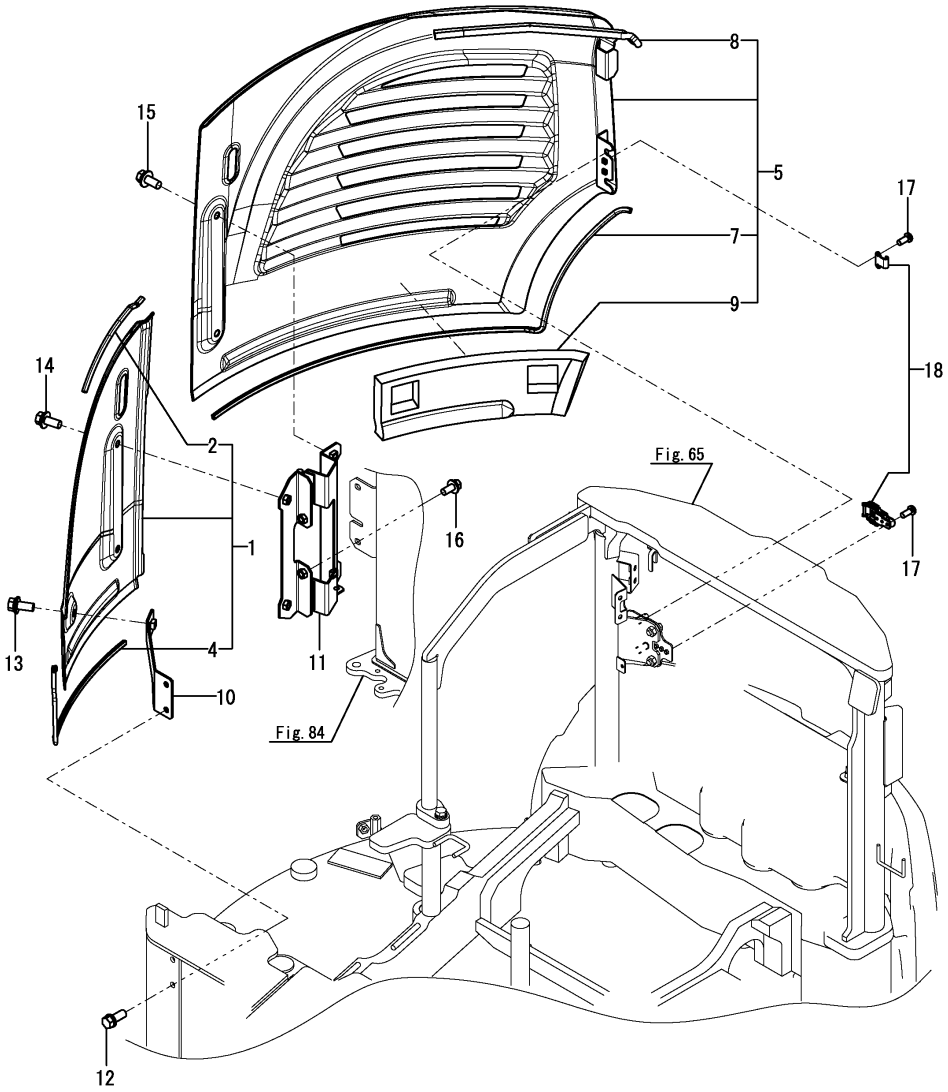


| No. | Lev. | Parts No. | Description | Q'ty (A) | (B) | (C) | (D) | (E) | (F) | I | R |
|---|---|---|---|---|---|---|---|---|---|---|---|
| 1 | 1 | 172B03-65800 | BONNET ASSY, R FR | 1 | | | | | | | |
| 2 | 2 | 172434-61200 | TRIM, 245 | 1 | | | | | | | |
| 4 | 2 | 172B03-65870 | SEAL, 585 | 1 | | | | | | | |
| 5 | 1 | 172B03-65820 | BONNET ASSY, REAR R | 1 | | | | | | | |
| 7 | 2 | 172B03-65880 | SEAL, 1105 | 1 | | | | | | | |
| 8 | 2 | 172B03-65890 | SEAL, 400 | 1 | | | | | | | |
| 9 | 2 | 172B03-65940 | SPONGE, BONNET R | 1 | | | | | | | |
| 10 | 1 | 172B03-65900 | STAY ASSY, BONNET R | 1 | | | | | | | |
| 11 | 1 | 172B03-65950 | HINGE ASSY, BONNET R | 1 | | | | | | | |
| 12 | 1 | 26013-100252 | BOLT, M10X 25 | 2 | | | | | | | |
| 13 | 1 | 26014-100252 | BOLT, M10X 25 | 1 | | | | | | | |
| 14 | 1 | 26014-100252 | BOLT, M10X 25 | 2 | | | | | | | |
| 15 | 1 | 26014-100252 | BOLT, M10X 25 | 2 | | | | | | | |
| 16 | 1 | 26014-100252 | BOLT, M10X 25 | 2 | | | | | | | |
| 17 | 1 | 26557-050122 | SCREW, M5X12 | 5 | | | | | | | |
| 18 | 1 | 933171-18750 | CLIP, CATCH | 1 | | | | | | | |

N:Old $\overset{\text{Yes}}{\underset{\text{No}}{\leftrightarrows}}$ New, Q:Old $\overset{\text{No}}{\underset{\text{Yes}}{\leftrightarrows}}$ New, R:Old $\overset{\text{Yes}}{\underset{\text{Yes}}{\leftrightarrows}}$ New, S:Old $\overset{\text{No}}{\underset{\text{No}}{\leftrightarrows}}$ New, W:Add, Z:Discontinued, F:Interchangeable by set, K:Q'ty Change

Copyright (C) YANMAR GLOBAL CS CO., LTD. All RightsReserved.

# Fig.64. CANOPY



(A)=VIO30-6B P(KR)
(B)=
(C)=
(D)=
(E)=
(F)=

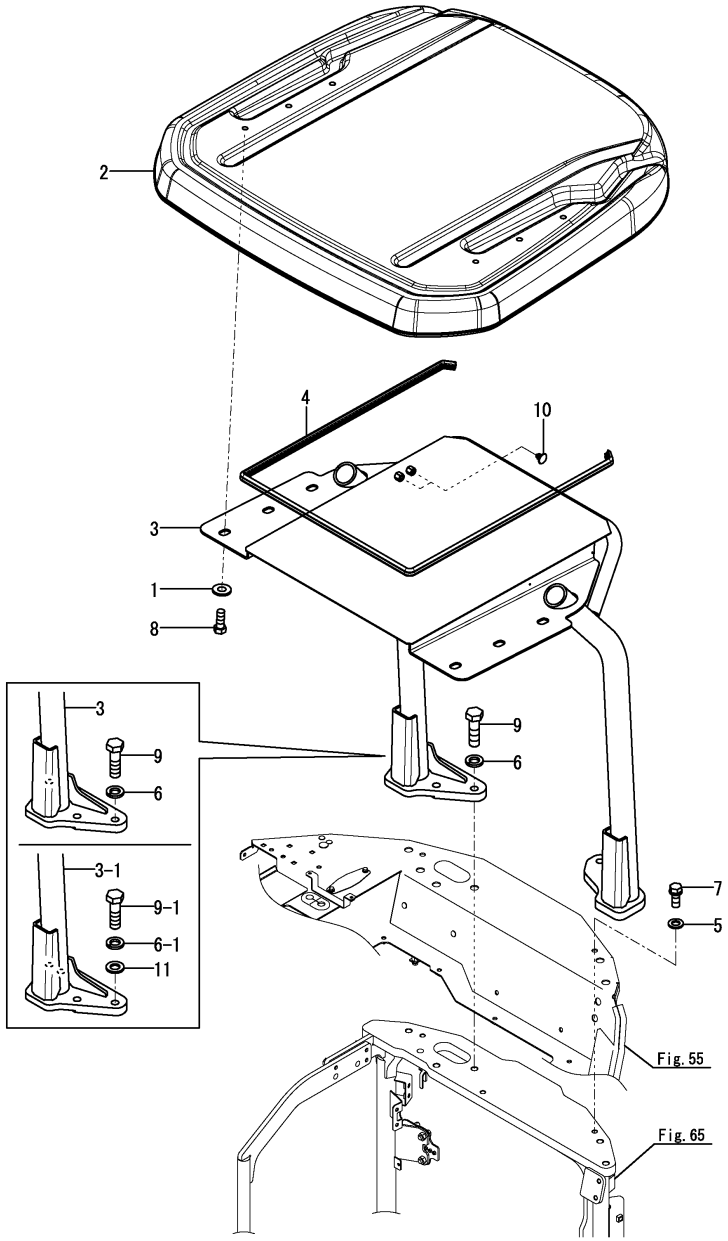


| No. | Lev. | Parts No. | Description | Q'ty (A) | (B) | (C) | (D) | (E) | (F) | I | R |
|---|---|---|---|---|---|---|---|---|---|---|---|
| 1 | 1 | 172730-05250 | WASHER, 12 | 6 | | | | | | | |
| 2 | 1 | 172B03-67100 | ROOF ASSY, CANOPY | 1 | | | | | | | |
| 3 | 1 | 172B03-67150 | CANOPY ASSY, GUARD | 1 | | | | | | | |
| 3-1 | 1 | 172B03-67151 | CANOPY ASSY, HEAD G | 1 | | | | | | S | 1 |
| | (A=MBF477) | | | | | | | | | | |
| 4 | 1 | 172B03-67360 | SEAL, 2000 | 1 | | | | | | | |
| 5 | 1 | 22137-120000 | WASHER, 12 | 1 | | | | | | | |
| 6 | 1 | 22217-160000 | WASHER, SPRING 16 | 5 | | | | | | | |
| 6-1 | 1 | 22217-160000 | WASHER, SPRING 16 | 7 | | | | | | K | |
| | (A=MBF477) | | | | | | | | | | |
| 7 | 1 | 26013-120302 | BOLT, M12X 30 | 1 | | | | | | | |
| 8 | 1 | 26013-120302 | BOLT, M12X 30 | 6 | | | | | | | |
| 9 | 1 | 26076-160552 | BOLT, 10.916X 55 | 5 | | | | | | | |
| 9-1 | 1 | 26076-160552 | BOLT, 10.916X 55 | 7 | | | | | | K | |
| | (A=MBF477) | | | | | | | | | | |
| 10 | 1 | 172122-17190 | CLIP, TREE | 2 | | | | | | | |
| 11 | 1 | 172B03-67760 | WASHER, 16.5X30X4.5 | 7 | | | | | | W | |
| | (A=MBF477) | | | | | | | | | | |

Remarks
(1)Interchangeable by simultaneous replacement with No.6-1, 9-1, 11, Fig.10 No.2-1, Fig.55 No.3-1 & Fig.65 No.3-1, 13-1.

N:Old $\overset{\text{Yes}}{\underset{\text{No}}{\rightleftarrows}}$ New, Q:Old $\overset{\text{No}}{\underset{\text{Yes}}{\rightleftarrows}}$ New, R:Old $\overset{\text{Yes}}{\underset{\text{Yes}}{\rightleftarrows}}$ New, S:Old $\overset{\text{No}}{\underset{\text{No}}{\rightleftarrows}}$ New, W:Add, Z:Discontinued, F:Interchangeable by set, K:Q'ty Change

Copyright (C) YANMAR GLOBAL CS CO., LTD. All RightsReserved.

# Fig.65. MOUNT



(A)=VIO30-6B P(KR)
(B)=
(C)=
(D)=
(E)=
(F)=

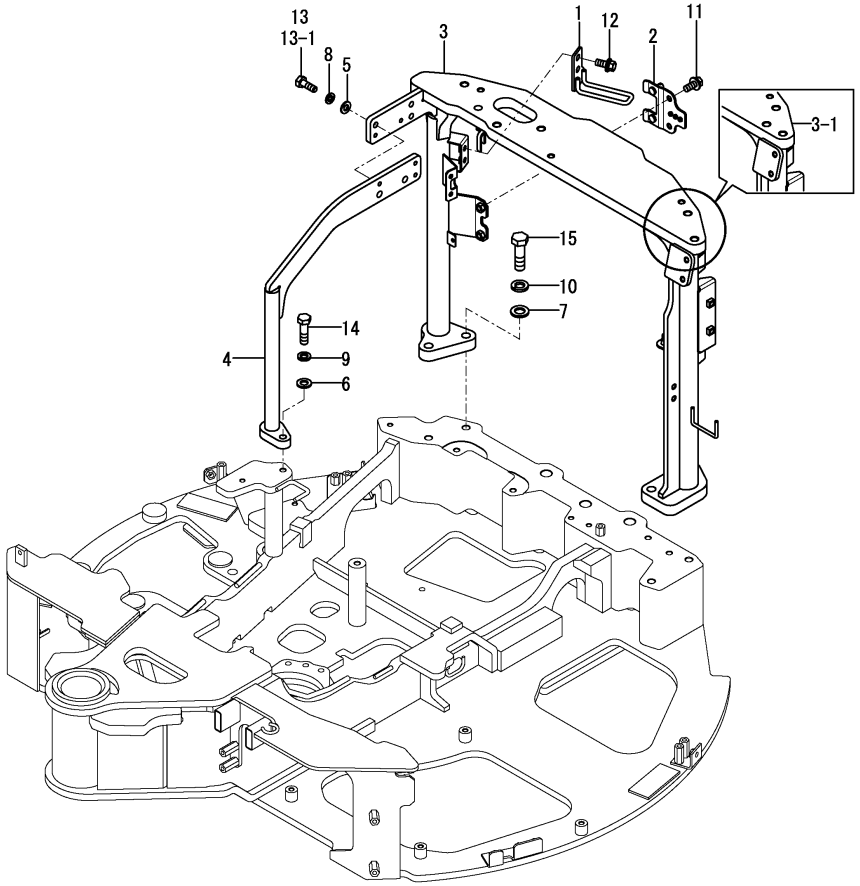


| No. | Lev. | Parts No. | Description | Q'ty (A) | (B) | (C) | (D) | (E) | (F) | I | R |
|---|---|---|---|---|---|---|---|---|---|---|---|
| 1 | 1 | 172B03-65350 | CATCH ASSY, BONNET A | 1 | | | | | | | |
| 2 | 1 | 172B03-65920 | BRACKET ASSY, R | 1 | | | | | | | |
| 3 | 1 | 172B03-67510 | MOUNT ASSY, CANOPY A | 1 | | | | | | | |
| 3-1 | 1 (A=MBF454) | 172B03-67511 | MOUNT ASSY,A CANOPY | 1 | | | | | | S | 1 |
| 4 | 1 | 172B03-67810 | MOUNT ASSY, CANOPY B | 1 | | | | | | | |
| 5 | 1 | 22137-100000 | WASHER, 10 | 3 | | | | | | | |
| 6 | 1 | 22137-120000 | WASHER, 12 | 1 | | | | | | | |
| 7 | 1 | 22137-160000 | WASHER, 16 | 4 | | | | | | | |
| 8 | 1 | 22217-100000 | WASHER, SPRING 10 | 3 | | | | | | | |
| 9 | 1 | 22217-120000 | WASHER, SPRING 12 | 1 | | | | | | | |
| 10 | 1 | 22217-160000 | WASHER, SPRING 16 | 4 | | | | | | | |
| 11 | 1 | 26014-100252 | BOLT, M10X 25 | 2 | | | | | | | |
| 12 | 1 | 26014-100252 | BOLT, M10X 25 | 2 | | | | | | | |
| 13 | 1 | 26076-100302 | BOLT, 10.910X 30 | 3 | | | | | | | |
| 13-1 | 1 (A=MBF454) | 26076-100352 | BOLT, 10.910X 35 | 3 | | | | | | S | |
| 14 | 1 | 26076-120452 | BOLT, 10.912X 45 | 1 | | | | | | | |
| 15 | 1 | 26076-160552 | BOLT, 10.916X 55 | 4 | | | | | | | |

Remarks
(1)Interchangeable by simultaneous replacement with No.13-1 & Fig.10 No.2-1.

N:Old $\overset{\text{Yes}}{\underset{\text{No}}{\rightleftarrows}}$ New, Q:Old $\overset{\text{No}}{\underset{\text{Yes}}{\rightleftarrows}}$ New, R:Old $\overset{\text{Yes}}{\underset{\text{Yes}}{\rightleftarrows}}$ New, S:Old $\overset{\text{No}}{\underset{\text{No}}{\rightleftarrows}}$ New, W:Add, Z:Discontinued, F:Interchangeable by set, K:Q'ty Change

Copyright (C) YANMAR GLOBAL CS CO., LTD. All RightsReserved.

# Fig.66. HYD.OIL PUMP MOUNT



(A)=VIO30-6B P(KR)
(B)=
(C)=
(D)=
(E)=
(F)=

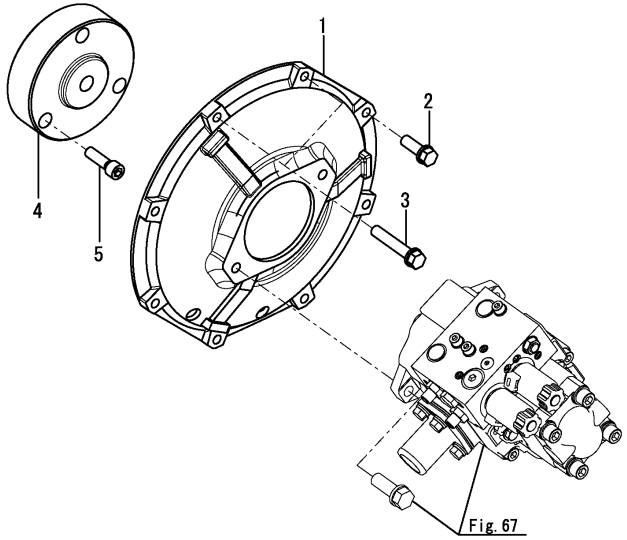


| No. | Lev. | Parts No. | Description | Q'ty (A) | (B) | (C) | (D) | (E) | (F) | I | R |
|---|---|---|---|---|---|---|---|---|---|---|---|
| 1 | 1 | 172168-71101-4 | COVER, FLYWHEEL | 1 | | | | | | | |
| 1-1 | 1 | 172B03-71100 | COVER, FLYWHEEL | 1 | | | | | | N | |
| | (A=MBF326) | | | | | | | | | | |
| 2 | 1 | 26013-100302 | BOLT, M10X 30 | 6 | | | | | | | |
| 3 | 1 | 26013-100502 | BOLT, M10X 50 | 2 | | | | | | | |
| 4 | 1 | 172165-71200 | COUPLING | 1 | | | | | | | |
| 5 | 1 | 26450-120402 | BOLT, M12X 40 | 3 | | | | | | | |

N:Old $\overset{\text{Yes}}{\underset{\text{No}}{\leftrightarrows}}$ New, Q:Old $\overset{\text{No}}{\underset{\text{Yes}}{\leftrightarrows}}$ New, R:Old $\overset{\text{Yes}}{\underset{\text{Yes}}{\leftrightarrows}}$ New, S:Old $\overset{\text{No}}{\underset{\text{No}}{\leftrightarrows}}$ New, W:Add, Z:Discontinued, F:Interchangeable by set, K:Q'ty Change

Copyright (C) YANMAR GLOBAL CS CO., LTD. All RightsReserved.

# Fig.67. HYD.OIL PUMP



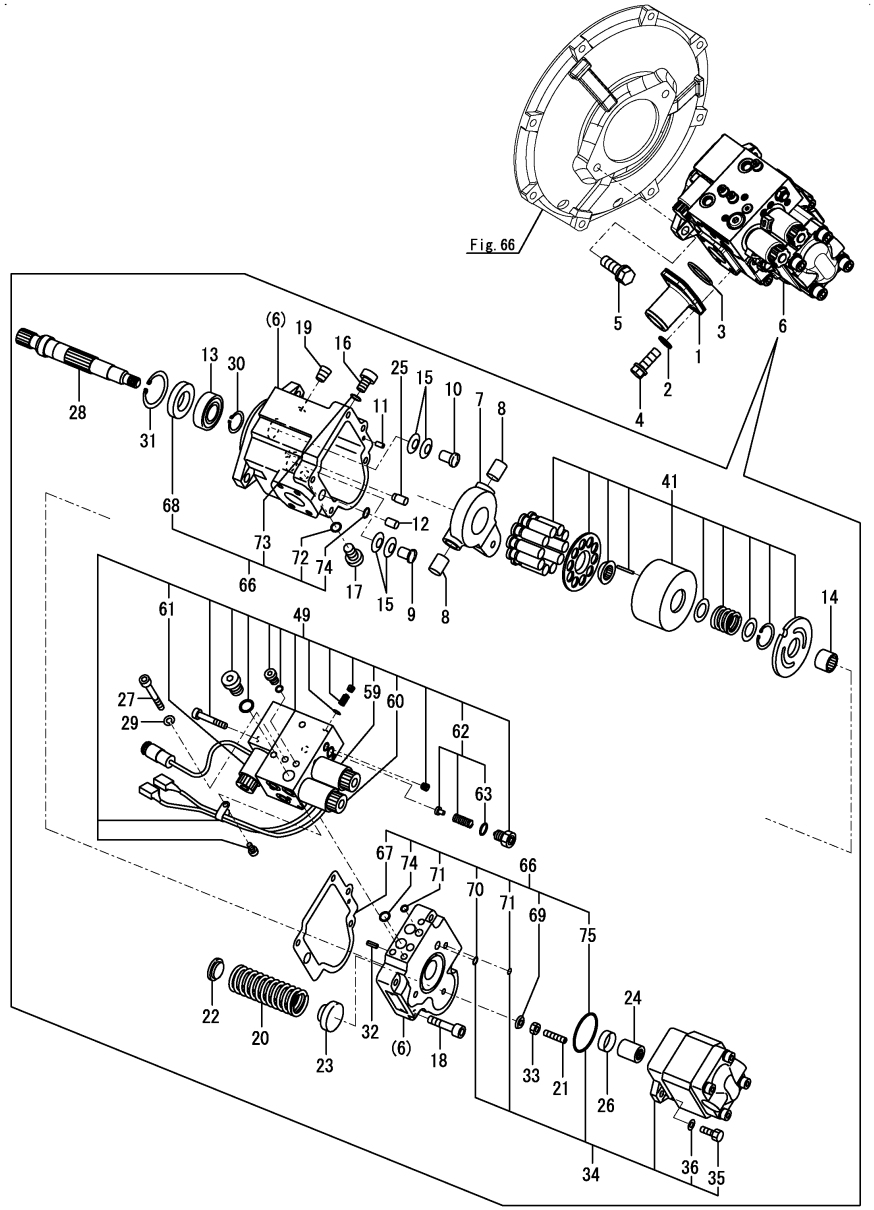


(A)=VIO30-6B P(KR)
(B)=
(C)=
(D)=
(E)=
(F)=

| No. | Lev. | Parts No. | Description | Q'ty (A) | (B) | (C) | (D) | (E) | (F) | I | R |
|---|---|---|---|---|---|---|---|---|---|---|---|
| 1 | 1 | 172422-76100 | FLANGE, 40.5 | 1 | | | | | | | |
| 2 | 1 | 22117-100000 | WASHER, 10 | 4 | | | | | | | |
| 3 | 1 | 24321-000400 | O-RING, 1AG40.0 | 1 | | | | | | | |
| 4 | 1 | 26013-100302 | BOLT, M10X 30 | 4 | | | | | | | |
| 5 | 1 | 26013-120352 | BOLT, M12X 35 | 2 | | | | | | | |
| 6 | 1 | 172B02-73110 | PUMP ASSY, 3SOL | 1 | | | | | | | |
| 7 | 2 | 172422-73140 | PLATE, SWASH | 1 | | | | | | | |
| 8 | 2 | 172422-73160 | PIN, SWING | 2 | | | | | | | |
| 9 | 2 | 172B02-73180 | PIN, STOPPER A | 1 | | | | | | | |
| 10 | 2 | 172B02-73190 | PIN, STOPPER B | 1 | | | | | | | |
| 11 | 2 | 172422-73220 | PIN | 1 | | | | | | | |
| 12 | 2 | 172422-73280 | PIN | 1 | | | | | | | |
| 13 | 2 | 172422-73290 | BEARING, BALL | 1 | | | | | | | |
| 14 | 2 | 172422-73500 | BEARING, NEEDLE | 1 | | | | | | | |
| 15 | 2 | 172422-73520 | SPRING | 4 | | | | | | | |
| 16 | 2 | 172422-73530 | PLUG | 1 | | | | | | | |
| 17 | 2 | 172422-73530 | PLUG | 1 | | | | | | | |
| 18 | 2 | 172422-73540 | BOLT, HEX SOCKET | 5 | | | | | | | |
| 19 | 2 | 172422-73550 | PLUG | 5 | | | | | | | |
| 20 | 2 | 172458-73550 | SPRING, T1 | 1 | | | | | | | |
| 21 | 2 | 172422-73560 | SCREW, HEX. SOCKET | 1 | | | | | | | |
| 22 | 2 | 172458-73560 | HOLDER, SPRING | 1 | | | | | | | |
| 23 | 2 | 172458-73570 | GUIDE, SPRING | 1 | | | | | | | |
| 24 | 2 | 172422-73580 | COUPLING | 1 | | | | | | | |
| 25 | 2 | 172458-73580 | ROD, G | 1 | | | | | | | |
| 26 | 2 | 172422-73590 | COLLAR | 1 | | | | | | | |
| 27 | 2 | 172422-73610 | BOLT, HEX SOCKET | 3 | | | | | | | |
| 28 | 2 | 172458-73660 | SHAFT | 1 | | | | | | | |
| 29 | 2 | 22212-080000 | WASHER 8 | 3 | | | | | | | |
| 30 | 2 | 22242-000250 | RING, 25 | 1 | | | | | | | |
| 31 | 2 | 22252-000520 | RING, 52 | 1 | | | | | | | |
| 32 | 2 | 22351-060016 | PIN, SPRING 6.0X16 | 1 | | | | | | | |
| 33 | 2 | 26711-080002 | NUT, M8 | 1 | | | | | | | |
| 34 | 2 | 172B02-73200 | PUMP KIT, GEAR | 1 | | | | | | W | |
| | (A=M60520) | | | | | | | | | | |
| 35 | 3 | 172450-73120 | BOLT, HEXAGON 8X25 | 2 | | | | | | | |
| 36 | 3 | 172450-73130 | WASHER | 2 | | | | | | | |
| 41 | 2 | 172458-73510 | BARREL KIT, CYLINDER | 1 | | | | | | W | |
| | (A=M60520) | | | | | | | | | | |
| 49 | 2 | 172958-73510 | BLOCK ASSY, VALVE | 1 | | | | | | W | |
| | (A=M60520) | | | | | | | | | | |
| 49-1 | 2 | 172958-73511 | BLOCK ASSY, VALVE | 1 | | | | | | N | |
| | (A=M60635) | | | | | | | | | | |
| 49-2 | 2 | 172958-73512 | VALVE KIT, SOL | 1 | | | | | | N | |
| | (A=MBF679) | | | | | | | | | | |
| 59 | 3 | 172458-73680 | VALVE, SC | 1 | | | | | | | 1 |
| 60 | 3 | 172458-73690 | VALVE, SC | 1 | | | | | | | 2 |
| 61 | 3 | 172458-73790 | VALVE, SOLENOID | 1 | | | | | | | 3 |
| 62 | 3 | 172A64-73280 | RELIEF KIT | 1 | | | | | | | |
| 63 | 4 | 24315-000100 | O-RING, 1BP10.0 | 1 | | | | | | | |
| 66 | 2 | 172422-73700 | SEAL SET, PUMP | 1 | | | | | | W | |

Remarks
(1)For second gear traveling.
(2)For safety lock.
(3)For quick coupler.

N:Old $\overset{\text{Yes}}{\underset{\text{No}}{\rightleftarrows}}$ New, Q:Old $\overset{\text{No}}{\underset{\text{Yes}}{\rightleftarrows}}$ New, R:Old $\overset{\text{Yes}}{\underset{\text{Yes}}{\rightleftarrows}}$ New, S:Old $\overset{\text{No}}{\underset{\text{No}}{\rightleftarrows}}$ New, W:Add, Z:Discontinued, F:Interchangeable by set, K:Q'ty Change

++ CONTINUE ++

Copyright (C) YANMAR GLOBAL CS CO., LTD. All RightsReserved.

# Fig.67. HYD.OIL PUMP



(A)=VIO30-6B P(KR)
(B)=
(C)=
(D)=
(E)=
(F)=

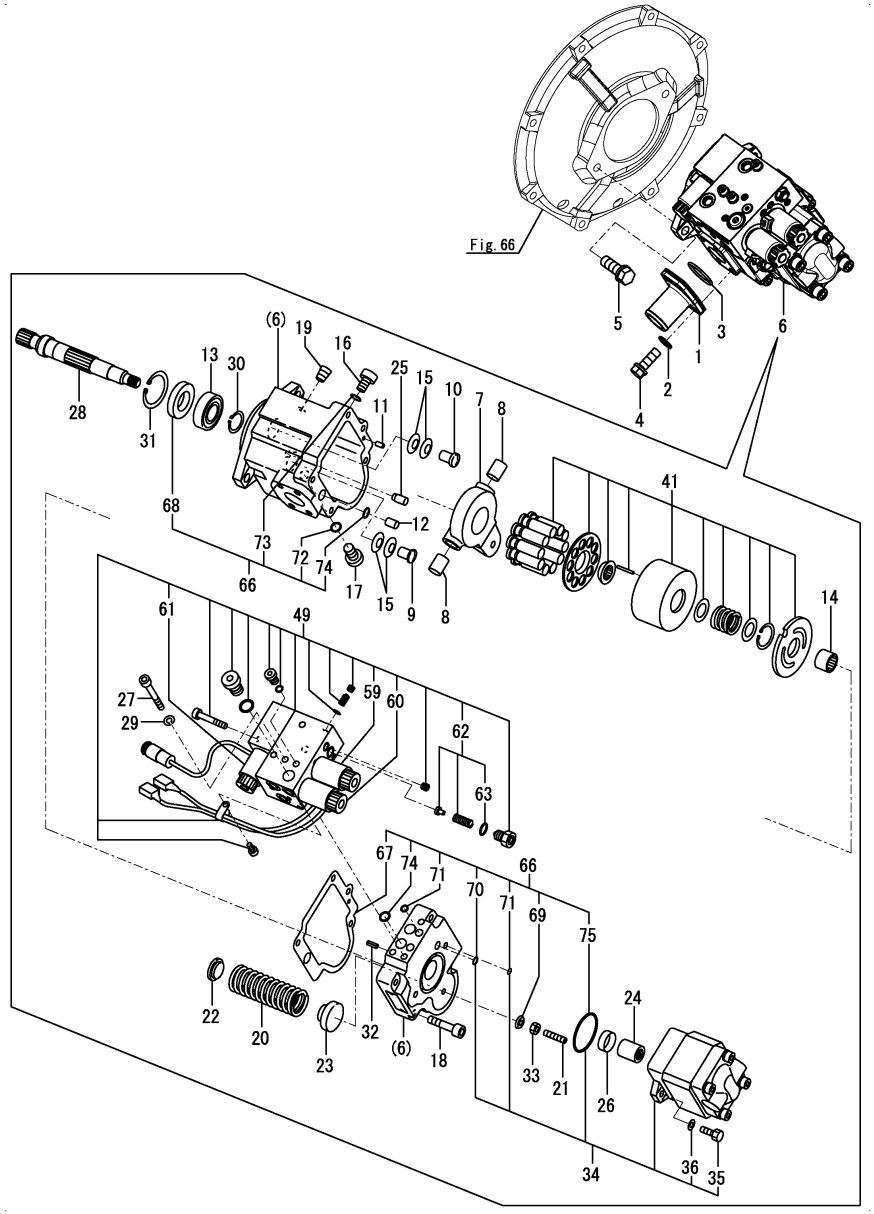


| No. | Lev. | Parts No. | Description | Q'ty (A) | (B) | (C) | (D) | (E) | (F) | I | R |
|---|---|---|---|---|---|---|---|---|---|---|---|
| | (A=M60520) | | | | | | | | | | |
| 67 | 3 | 172422-73170 | GASKET | 1 | | | | | | | |
| 68 | 3 | 172422-73510 | SEAL, OIL | 1 | | | | | | | |
| 69 | 3 | 172422-73570 | WASHER, SEAL | 1 | | | | | | | |
| 70 | 3 | 24315-000070 | O-RING, 1BP7.0 | 1 | | | | | | | |
| 71 | 3 | 24315-000080 | O-RING, 1BP8.0 | 2 | | | | | | | |
| 72 | 3 | 24315-000110 | O-RING, 1BP11.0 | 1 | | | | | | | |
| 73 | 3 | 24315-000110 | O-RING, 1BP11.0 | 1 | | | | | | | |
| 74 | 3 | 24315-000120 | O-RING, 1BP12.0 | 3 | | | | | | | |
| 75 | 3 | 24325-000550 | O-RING, 1BG55.0 | 1 | | | | | | | |

Remarks
(1)For second gear traveling.
(2)For safety lock.
(3)For quick coupler.

N:Old $\overset{\text{Yes}}{\underset{\text{No}}{\rightleftarrows}}$ New, Q:Old $\overset{\text{No}}{\underset{\text{Yes}}{\rightleftarrows}}$ New, R:Old $\overset{\text{Yes}}{\underset{\text{Yes}}{\rightleftarrows}}$ New, S:Old $\overset{\text{No}}{\underset{\text{No}}{\rightleftarrows}}$ New, W:Add, Z:Discontinued, F:Interchangeable by set, K:Q'ty Change

Copyright (C) YANMAR GLOBAL CS CO., LTD. All RightsReserved.

# Fig.68. BOOM CYLINDER(Y SPEC.)(TO M60688)

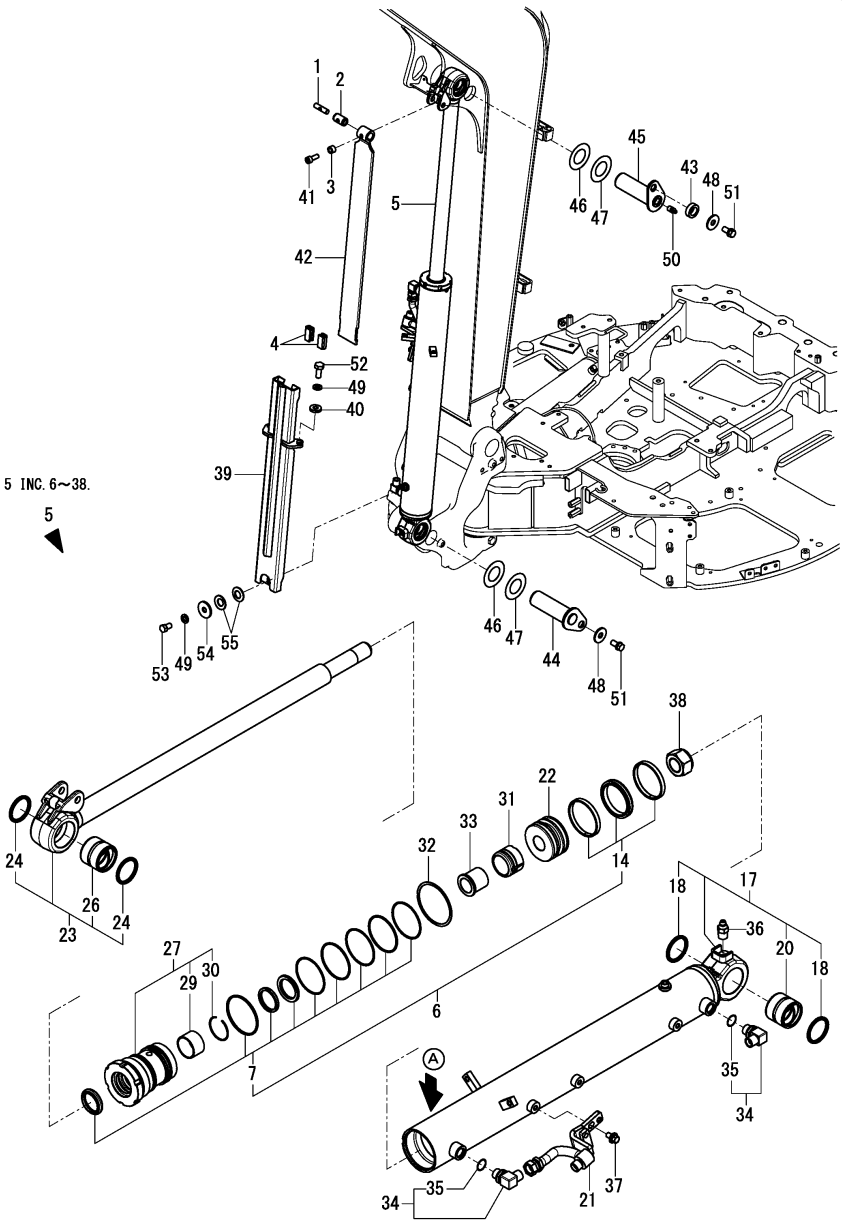


(A)=VIO30-6B P(KR)
(B)=
(C)=
(D)=
(E)=
(F)=

| No. | Lev. | Parts No. | Description | Q'ty (A) | (B) | (C) | (D) | (E) | (F) | I | R |
|---|---|---|---|---|---|---|---|---|---|---|---|
| 1 | 1 | 172A23-72043 | SHAFT, 14X53 | 1 | | | | | | | |
| 2 | 1 | 172A23-72052 | GROMMET | 1 | | | | | | | |
| 3 | 1 | 172A46-72070 | SPACER | 1 | | | | | | | |
| 4 | 1 | 172A23-72081 | GUIDE, SLIDE | 2 | | | | | | | |
| 5 | 1 | 172B03-72101 | CYLINDER ASSY, BOOM | 1 | | | | | | Z | 1 |
| | (A=M60689) | | | | | | | | | | |
| 6 | 2 | 172B03-72010 | SEAL SET, 85X45 | 1 | | | | | | | |
| 7 | 3 | 172B03-72020 | SEAL SET, HEAD 85X45 | 1 | | | | | | | |
| 14 | 3 | 172B03-72270 | SEAL SET, PISTON 85 | 1 | | | | | | | |
| 17 | 2 | 172B03-72111 | TUBE ASSY, BOOM | 1 | | | | | | | |
| 18 | 3 | 172448-54120 | SEAL, DUST 50X60X4 | 2 | | | | | | | |
| 20 | 3 | 172B03-72291 | BUSH, 50X60X50 | 1 | | | | | | | |
| 21 | 2 | 172B03-72151 | PIPE ASSY, BOOM | 1 | | | | | | | |
| 22 | 2 | 172B03-72180 | PISTON, 85 33 | 1 | | | | | | | |
| 23 | 2 | 172B03-72200 | ROD ASSY, BOOM | 1 | | | | | | | |
| 24 | 3 | 172448-54120 | SEAL, DUST 50X60X4 | 2 | | | | | | | |
| 26 | 3 | 172B03-72291 | BUSH, 50X60X50 | 1 | | | | | | | |
| 27 | 2 | 172B03-72250 | HEAD ASSY, 85 45 | 1 | | | | | | | |
| 29 | 3 | 24550-045300 | BUSH, 45X30 | 1 | | | | | | | |
| 30 | 3 | 933111-26600 | RING, SPRING 55 | 1 | | | | | | | |
| 31 | 2 | 172458-72260 | PLUNGER, CUSHION 56 | 1 | | | | | | | |
| 32 | 2 | 172146-72270 | WASHER, LOCK 85 | 1 | | | | | | | |
| 33 | 2 | 172458-72290 | COLLAR, 33 44 | 1 | | | | | | | |
| 34 | 2 | 172141-76900 | CONNECTOR ASSY, 1/2L | 2 | | | | | | | |
| 35 | 3 | 24315-000180 | O-RING, 1BP18.0 | 2 | | | | | | | |
| 36 | 2 | 24761-020000 | NIPPLE, GREASE PT1/8 | 1 | | | | | | | |
| 37 | 2 | 26013-100202 | BOLT, M10X 20 | 1 | | | | | | | |
| 38 | 2 | 933111-20200 | U-NUT, M33 | 1 | | | | | | | |
| 39 | 1 | 172B03-72240 | GUIDE ASSY, 747 | 1 | | | | | | | |
| 40 | 1 | 172A79-72570 | WASHER, 10.5X24X4.5 | 2 | | | | | | | |
| 41 | 1 | 172A47-72840 | BOLT, M6X16 | 1 | | | | | | | |
| 42 | 1 | 172A47-72881-N | PLATE, SLIDE 760 | 1 | | | | | | | |
| 43 | 1 | 172164-81670 | SPACER | 1 | | | | | | | |
| 44 | 1 | 172B03-81760 | PIN ASSY, 50X158 B | 1 | | | | | | | |
| 45 | 1 | 172B03-81820 | PIN ASSY, 50X158 A | 1 | | | | | | | |
| 46 | 1 | 172165-82520 | SHIM, 50X90X0.5 | 2 | | | | | | | |
| 47 | 1 | 172165-82530 | SHIM, 50X90X1.2 | 2 | | | | | | | |
| 48 | 1 | 22157-120000 | WASHER, 12 | 2 | | | | | | | |
| 49 | 1 | 22217-100000 | WASHER, SPRING 10 | 3 | | | | | | | |
| 50 | 1 | 24761-020000 | NIPPLE, GREASE PT1/8 | 1 | | | | | | | |
| 51 | 1 | 26013-120252 | BOLT, M12X 25 | 2 | | | | | | | |
| 52 | 1 | 26076-100252 | BOLT, 10.910X 25 | 2 | | | | | | | |
| 53 | 1 | 26116-100162 | BOLT, M10X 16 PLATED | 1 | | | | | | | |
| 54 | 1 | 933147-03400 | WASHER, BRAKE ARM | 1 | | | | | | | |
| 55 | 1 | 933168-14170 | SPRING, 16 | 2 | | | | | | | |

Remarks
(1)A : no mark.
Replacement with Fig.138(68A) No1.

N:Old $\overset{\text{Yes}}{\underset{\text{No}}{\rightleftarrows}}$ New, Q:Old $\overset{\text{No}}{\underset{\text{Yes}}{\rightleftarrows}}$ New, R:Old $\overset{\text{Yes}}{\underset{\text{Yes}}{\rightleftarrows}}$ New, S:Old $\overset{\text{No}}{\underset{\text{No}}{\rightleftarrows}}$ New, W:Add, Z:Discontinued, F:Interchangeable by set, K:Q'ty Change

Copyright (C) YANMAR GLOBAL CS CO., LTD. All RightsReserved.

# Fig.138. (68A)BOOM CYLINDER(K SPEC.)(FROM M60689)

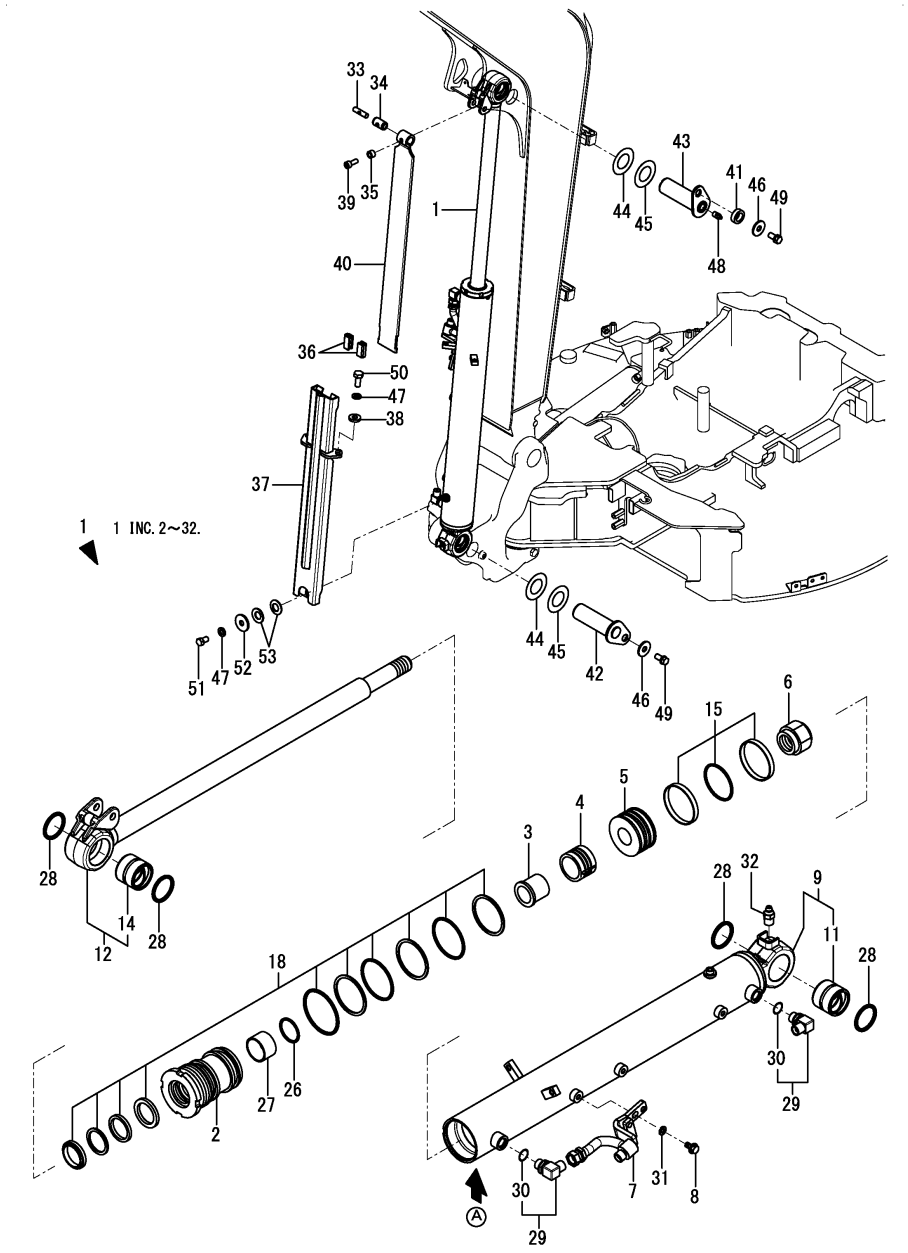


(A)=VIO30-6B P(KR)
(B)=
(C)=
(D)=
(E)=
(F)=

| No. | Lev. | Parts No. | Description | Q'ty (A) | (B) | (C) | (D) | (E) | (F) | I | R |
|---|---|---|---|---|---|---|---|---|---|---|---|
| 1 | 1 (A=M60689) | 172B03-70100 | CYLINDER ASSY, BOOM | 1 | | | | | | W | |
| 2 | 2 | 172B03-70140 | HEAD | 1 | | | | | | | |
| 3 | 2 | 172B03-70150 | COLLAR | 1 | | | | | | | |
| 4 | 2 | 172B03-70160 | PLUNGER, CUSHION | 1 | | | | | | | |
| 5 | 2 | 172B03-70170 | PISTON | 1 | | | | | | | |
| 6 | 2 | 172B03-70180 | NUT, LOCK | 1 | | | | | | | |
| 7 | 2 | 172B03-70240 | PIPE ASSY | 1 | | | | | | | |
| 8 | 2 | 172B03-70250 | BOLT, 10.9 10X20 | 1 | | | | | | | |
| 9 | 2 | 172B03-70260 | REPAIR KIT, TUBE AS | 1 | | | | | | | |
| 11 | 3 | 172B03-70130 | BUSH, PIN 50 | 1 | | | | | | | |
| 12 | 2 | 172B03-70270 | REPAIR KIT, ROD AS | 1 | | | | | | | |
| 14 | 3 | 172B03-70130 | BUSH, PIN 50 | 1 | | | | | | | |
| 15 | 2 | 172B03-70280 | SEAL KIT, PISTON | 1 | | | | | | | |
| 18 | 2 | 172B03-70290 | SEAL KIT, HEAD | 1 | | | | | | | |
| 26 | 2 | 172B16-72460 | CLIP | 1 | | | | | | | |
| 27 | 2 | 172B16-72470 | SLEEVE | 1 | | | | | | | |
| 28 | 2 | 172B11-72560 | SEAL, DUST PIN 50 | 4 | | | | | | | |
| 29 | 2 | 172141-76900 | CONNECTOR ASSY, 1/2L | 2 | | | | | | | |
| 30 | 3 | 24315-000180 | O-RING, 1BP18.0 | 2 | | | | | | | |
| 31 | 2 | 22137-100000 | WASHER, 10 | 1 | | | | | | | |
| 32 | 2 | 24761-020000 | NIPPLE, GREASE PT1/8 | 1 | | | | | | | |
| 33 | 1 | 172A23-72043 | SHAFT, 14X53 | 1 | | | | | | | |
| 34 | 1 | 172A23-72052 | GROMMET | 1 | | | | | | | |
| 35 | 1 | 172A46-72070 | SPACER | 1 | | | | | | | |
| 36 | 1 | 172A23-72081 | GUIDE, SLIDE | 2 | | | | | | | |
| 37 | 1 | 172B03-72240 | GUIDE ASSY, 747 | 1 | | | | | | | |
| 38 | 1 | 172A79-72570 | WASHER, 10.5X24X4.5 | 2 | | | | | | | |
| 39 | 1 | 172A47-72840 | BOLT, M6X16 | 1 | | | | | | | |
| 40 | 1 | 172A47-72881-N | PLATE, SLIDE 760 | 1 | | | | | | | |
| 41 | 1 | 172164-81670 | SPACER | 1 | | | | | | | |
| 42 | 1 | 172B03-81760 | PIN ASSY, 50X158 B | 1 | | | | | | | |
| 43 | 1 | 172B03-81820 | PIN ASSY, 50X158 A | 1 | | | | | | | |
| 44 | 1 | 172165-82520 | SHIM, 50X90X0.5 | 2 | | | | | | | |
| 45 | 1 | 172165-82530 | SHIM, 50X90X1.2 | 2 | | | | | | | |
| 46 | 1 | 22157-120000 | WASHER, 12 | 2 | | | | | | | |
| 47 | 1 | 22217-100000 | WASHER, SPRING 10 | 3 | | | | | | | |
| 48 | 1 | 24761-020000 | NIPPLE, GREASE PT1/8 | 1 | | | | | | | |
| 49 | 1 | 26013-120252 | BOLT, M12X 25 | 2 | | | | | | | |
| 50 | 1 | 26076-100252 | BOLT, 10.910X 25 | 2 | | | | | | | |
| 51 | 1 | 26116-100162 | BOLT, M10X 16 PLATED | 1 | | | | | | | |
| 52 | 1 | 933147-03400 | WASHER, BRAKE ARM | 1 | | | | | | | |
| 53 | 1 | 933168-14170 | SPRING, 16 | 2 | | | | | | | |

Remarks
* A : There is serial No.(K1570XXX).

N:Old $\overset{\text{Yes}}{\underset{\text{No}}{\leftrightarrows}}$ New, Q:Old $\overset{\text{No}}{\underset{\text{Yes}}{\leftrightarrows}}$ New, R:Old $\overset{\text{Yes}}{\underset{\text{Yes}}{\leftrightarrows}}$ New, S:Old $\overset{\text{No}}{\underset{\text{No}}{\leftrightarrows}}$ New, W:Add, Z:Discontinued, F:Interchangeable by set, K:Q'ty Change

Copyright (C) YANMAR GLOBAL CS CO., LTD. All RightsReserved.

# Fig.69. ARM CYLINDER(Y SPEC.)(TO M60688)



(A)=VIO30-6B P(KR)
(B)=
(C)=
(D)=
(E)=
(F)=

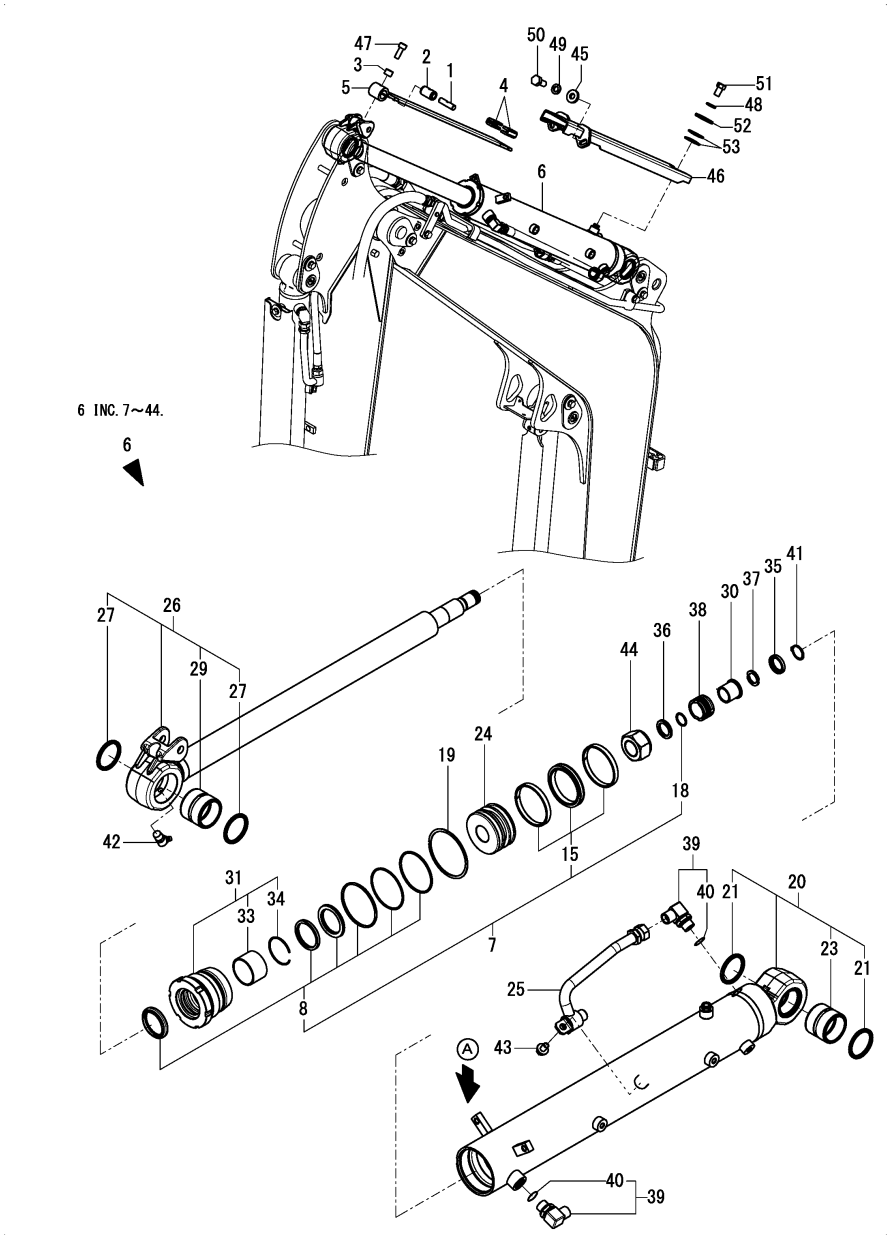


| No. | Lev. | Parts No. | Description | Q'ty (A) | (B) | (C) | (D) | (E) | (F) | I | R |
|---|---|---|---|---|---|---|---|---|---|---|---|
| 1 | 1 | 172A23-72043 | SHAFT, 14X53 | 1 | | | | | | | |
| 2 | 1 | 172A23-72052 | GROMMET | 1 | | | | | | | |
| 3 | 1 | 172A46-72070 | SPACER | 1 | | | | | | | |
| 4 | 1 | 172A23-72081 | GUIDE, SLIDE | 2 | | | | | | | |
| 5 | 1 | 172B03-72340 | PLATE, SLIDE 650 | 1 | | | | | | | |
| 6 | 1 | 172B02-72451 | CYLINDER ASSY, ARM Q | 1 | | | | | | Z | 1 |
| | (A=M60689) | | | | | | | | | | |
| 7 | 2 | 172B02-72030 | SEAL SET, 80X50 | 1 | | | | | | | |
| 8 | 3 | 172B02-72040 | SEAL SET, HEAD 80X50 | 1 | | | | | | | |
| 15 | 3 | 172B03-72930 | SEAL SET, PISTON 80 | 1 | | | | | | | |
| 18 | 3 | 24315-000220 | O-RING, 1BP22.0 | 1 | | | | | | | |
| 19 | 2 | 172142-72260 | WASHER, LOCK 80 B | 1 | | | | | | | |
| 20 | 2 | 172B02-72310 | TUBE ASSY, ARM | 1 | | | | | | | |
| 21 | 3 | 172448-54120 | SEAL, DUST 50X60X4 | 2 | | | | | | | |
| 23 | 3 | 172151-72591 | BUSH, 50X50 | 1 | | | | | | | |
| 24 | 2 | 172B02-72370 | PISTON, 80 33 | 1 | | | | | | | |
| 25 | 2 | 172B02-72400 | PIPE ASSY, ARM | 1 | | | | | | | |
| 26 | 2 | 172B03-72401 | ROD ASSY, ARM | 1 | | | | | | | |
| 27 | 3 | 172448-54120 | SEAL, DUST 50X60X4 | 2 | | | | | | | |
| 29 | 3 | 172151-72591 | BUSH, 50X50 | 1 | | | | | | | |
| 30 | 2 | 172458-72460 | COLLAR, 26 32 | 1 | | | | | | | |
| 31 | 2 | 172B02-72460 | HEAD ASSY, 80 50 Q | 1 | | | | | | | |
| 33 | 3 | 172151-72540 | BUSH, ROD 50 35 | 1 | | | | | | | |
| 34 | 3 | 933125-94500 | RING, SPRING 60 | 1 | | | | | | | |
| 35 | 2 | 172458-72470 | COVER, STOPPER | 1 | | | | | | | |
| 36 | 2 | 172423-72530 | SPACER, 26X4 | 1 | | | | | | | |
| 37 | 2 | 172423-72540 | STOPPER | 2 | | | | | | | |
| 38 | 2 | 172460-72941 | PLUNGER, CUSHION 42A | 1 | | | | | | | |
| 39 | 2 | 172141-76900 | CONNECTOR ASSY, 1/2L | 2 | | | | | | | |
| 40 | 3 | 24315-000180 | O-RING, 1BP18.0 | 2 | | | | | | | |
| 41 | 2 | 22242-000260 | RING, 26 | 1 | | | | | | | |
| 42 | 2 | 24761-040000 | NIPPLE, GREASE B | 1 | | | | | | | |
| 43 | 2 | 26014-100202 | BOLT, M10X 20 | 1 | | | | | | | |
| 44 | 2 | 933111-20200 | U-NUT, M33 | 1 | | | | | | | |
| 45 | 1 | 172A79-72570 | WASHER, 10.5X24X4.5 | 2 | | | | | | | |
| 46 | 1 | 172B03-72670 | GUIDE ASSY, 655 | 1 | | | | | | | |
| 47 | 1 | 172A47-72840 | BOLT, M6X16 | 1 | | | | | | | |
| 48 | 1 | 22217-100000 | WASHER, SPRING 10 | 1 | | | | | | | |
| 49 | 1 | 22217-100000 | WASHER, SPRING 10 | 2 | | | | | | | |
| 50 | 1 | 26076-100252 | BOLT, 10.910X 25 | 2 | | | | | | | |
| 51 | 1 | 26116-100162 | BOLT, M10X 16 PLATED | 1 | | | | | | | |
| 52 | 1 | 933147-03400 | WASHER, BRAKE ARM | 1 | | | | | | | |
| 53 | 1 | 933168-14170 | SPRING, 16 | 2 | | | | | | | |

Remarks
(1)A : no mark.
Replacement with Fig.139(69A) No1.

N:Old $\overset{\text{Yes}}{\underset{\text{No}}{\leftrightarrows}}$ New, Q:Old $\overset{\text{No}}{\underset{\text{Yes}}{\leftrightarrows}}$ New, R:Old $\overset{\text{Yes}}{\underset{\text{Yes}}{\leftrightarrows}}$ New, S:Old $\overset{\text{No}}{\underset{\text{No}}{\leftrightarrows}}$ New, W:Add, Z:Discontinued, F:Interchangeable by set, K:Q'ty Change

Copyright (C) YANMAR GLOBAL CS CO., LTD. All RightsReserved.

# Fig.139. (69A)ARM CYLINDER(K SPEC.)(FROM M60689)

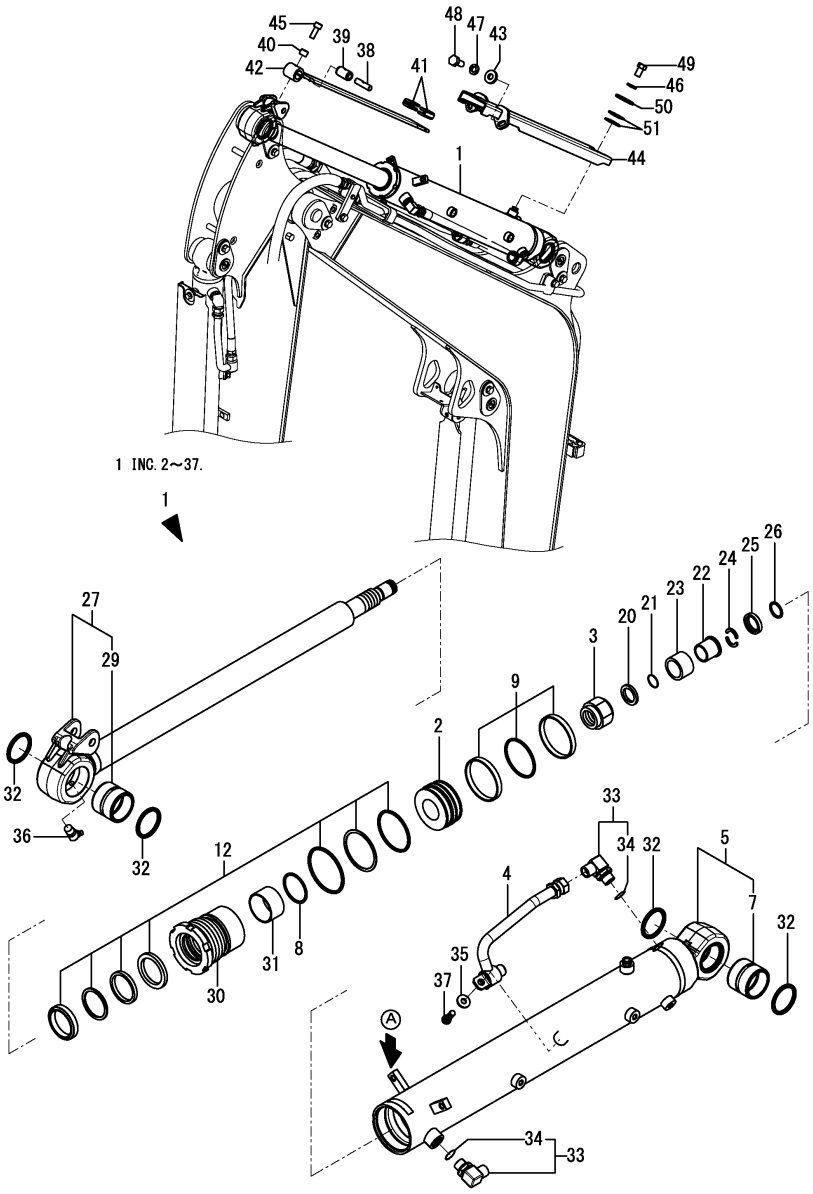


(A)=VIO30-6B P(KR)
(B)=
(C)=
(D)=
(E)=
(F)=

| No. | Lev. | Parts No. | Description | Q'ty (A) | (B) | (C) | (D) | (E) | (F) | I | R |
|---|---|---|---|---|---|---|---|---|---|---|---|
| 1 | 1 (A=M60689) | 172B02-70900 | CYLINDER ASSY, ARM Q | 1 | | | | | | W | |
| 2 | 2 | 172B02-70330 | PISTON | 1 | | | | | | | |
| 3 | 2 | 172B03-70340 | NUT, LOCK | 1 | | | | | | | |
| 4 | 2 | 172B02-70360 | PIPE ASSY | 1 | | | | | | | |
| 5 | 2 | 172B02-70370 | REPAIR KIT, TUBE AS | 1 | | | | | | | |
| 7 | 3 | 172B03-70320 | BUSH, PIN 50 | 1 | | | | | | | |
| 8 | 2 | 172B03-70370 | RING, RETAINING | 1 | | | | | | | |
| 9 | 2 | 172B02-70380 | SEAL KIT, PISTON | 1 | | | | | | | |
| 12 | 2 | 172B02-70390 | SEAL KIT, HEAD | 1 | | | | | | | |
| 20 | 2 | 172B03-70420 | SPACER | 1 | | | | | | | |
| 21 | 2 | 172B03-70430 | O-RING, 1B P 22.0 | 1 | | | | | | | |
| 22 | 2 | 172B03-70440 | COLLAR | 1 | | | | | | | |
| 23 | 2 | 172B03-70450 | PLUNGER, CUSHION | 1 | | | | | | | |
| 24 | 2 | 172B03-70460 | STOPPER | 2 | | | | | | | |
| 25 | 2 | 172B03-70470 | COVER | 1 | | | | | | | |
| 26 | 2 | 172B03-70480 | RING, RETAINING | 1 | | | | | | | |
| 27 | 2 | 172B03-70490 | REPAIR KIT, ROD AS | 1 | | | | | | | |
| 29 | 3 | 172B03-70320 | BUSH, PIN 50 | 1 | | | | | | | |
| 30 | 2 | 172B02-70910 | HEAD | 1 | | | | | | | |
| 31 | 2 | 172A66-72140 | BEARING, SLEEVE | 1 | | | | | | | |
| 32 | 2 | 172B11-72560 | SEAL, DUST PIN 50 | 4 | | | | | | | |
| 33 | 2 | 172141-76900 | CONNECTOR ASSY, 1/2L | 2 | | | | | | | |
| 34 | 3 | 24315-000180 | O-RING, 1BP18.0 | 2 | | | | | | | |
| 35 | 2 | 22137-100000 | WASHER, 10 | 1 | | | | | | | |
| 36 | 2 | 24761-040000 | NIPPLE, GREASE B | 1 | | | | | | | |
| 37 | 2 | 26076-100162 | BOLT, 10 X 16 | 1 | | | | | | | |
| 38 | 1 | 172A23-72043 | SHAFT, 14X53 | 1 | | | | | | | |
| 39 | 1 | 172A23-72052 | GROMMET | 1 | | | | | | | |
| 40 | 1 | 172A46-72070 | SPACER | 1 | | | | | | | |
| 41 | 1 | 172A23-72081 | GUIDE, SLIDE | 2 | | | | | | | |
| 42 | 1 | 172B03-72340 | PLATE, SLIDE 650 | 1 | | | | | | | |
| 43 | 1 | 172A79-72570 | WASHER, 10.5X24X4.5 | 2 | | | | | | | |
| 44 | 1 | 172B03-72670 | GUIDE ASSY, 655 | 1 | | | | | | | |
| 45 | 1 | 172A47-72840 | BOLT, M6X16 | 1 | | | | | | | |
| 46 | 1 | 22217-100000 | WASHER, SPRING 10 | 1 | | | | | | | |
| 47 | 1 | 22217-100000 | WASHER, SPRING 10 | 2 | | | | | | | |
| 48 | 1 | 26076-100252 | BOLT, 10.910X 25 | 2 | | | | | | | |
| 49 | 1 | 26116-100162 | BOLT, M10X 16 PLATED | 1 | | | | | | | |
| 50 | 1 | 933147-03400 | WASHER, BRAKE ARM | 1 | | | | | | | |
| 51 | 1 | 933168-14170 | SPRING, 16 | 2 | | | | | | | |

Remarks
* A : There is serial No.(K1590XXX).

N:Old $\overset{\text{Yes}}{\underset{\text{No}}{\leftrightarrows}}$ New, Q:Old $\overset{\text{No}}{\underset{\text{Yes}}{\leftrightarrows}}$ New, R:Old $\overset{\text{Yes}}{\underset{\text{Yes}}{\leftrightarrows}}$ New, S:Old $\overset{\text{No}}{\underset{\text{No}}{\leftrightarrows}}$ New, W:Add, Z:Discontinued, F:Interchangeable by set, K:Q'ty Change

Copyright (C) YANMAR GLOBAL CS CO., LTD. All RightsReserved.

# Fig.70. BUCKET CYLINDER(Y SPEC.)(TO M60688)

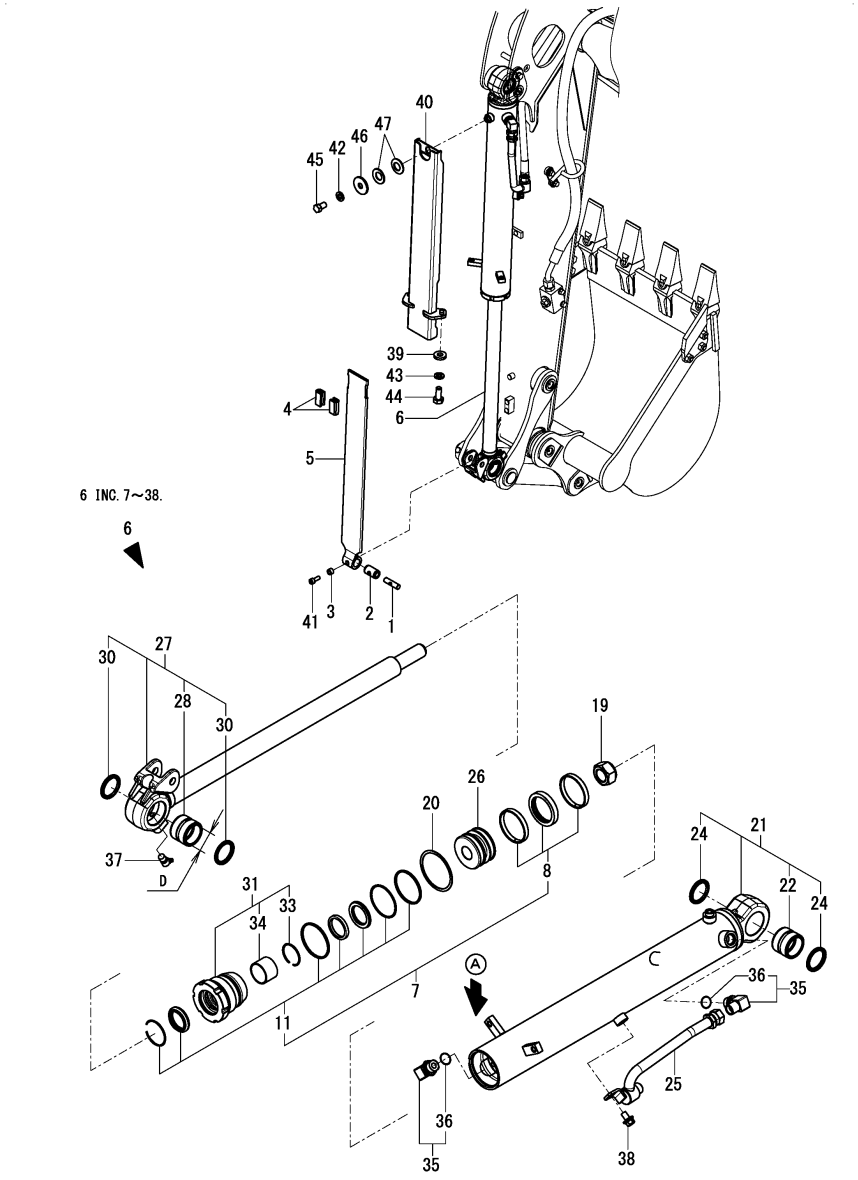


(A)=VIO30-6B P(KR)
(B)=
(C)=
(D)=
(E)=
(F)=

| No. | Lev. | Parts No. | Description | Q'ty (A) | (B) | (C) | (D) | (E) | (F) | I | R |
|---|---|---|---|---|---|---|---|---|---|---|---|
| 1 | 1 | 172A23-72043 | SHAFT, 14X53 | 1 | | | | | | | |
| 2 | 1 | 172A23-72052 | GROMMET | 1 | | | | | | | |
| 3 | 1 | 172A46-72070 | SPACER | 1 | | | | | | | |
| 4 | 1 | 172A23-72081 | GUIDE, SLIDE | 2 | | | | | | | |
| 5 | 1 | 172B03-72340 | PLATE, SLIDE 650 | 1 | | | | | | | |
| 6 | 1 | 172B03-72500 | CYLINDER ASSY,BUCKET | 1 | | | | | | | |
| 6-1 | 1 | 172B03-72501 | CYLINDER ASSY,BUCKET | 1 | | | | | | S | 1 |
| | (A=M60505) | | | | | | | | | | |
| 6-2 | 1 | 172B03-72501 | CYLINDER ASSY,BUCKET | 1 | | | | | | Z | 2 |
| | (A=M60689) | | | | | | | | | | |
| 7 | 2 | 172B03-72050 | SEAL SET, 70X40 | 1 | | | | | | | |
| 8 | 3 | 172B03-72570 | SEAL SET, PISTON 70 | 1 | | | | | | | |
| 11 | 3 | 172A46-72590 | SEAL SET, HEAD 70X40 | 1 | | | | | | | |
| 19 | 2 | 172141-72250 | U-NUT, M27 | 1 | | | | | | | |
| 20 | 2 | 172141-72420 | WASHER, LOCK 70 | 1 | | | | | | | |
| 21 | 2 | 172B03-72510 | TUBE ASSY, BUCKET | 1 | | | | | | | |
| 22 | 3 | 172165-72310 | BUSH, 40-40 | 1 | | | | | | | |
| 24 | 3 | 172448-72650 | SEAL, DUST 40X50X4 | 2 | | | | | | | |
| 25 | 2 | 172B03-72550 | PIPE ASSY, BUCKET | 1 | | | | | | | |
| 26 | 2 | 172B03-72580 | PISTON, 70 27 | 1 | | | | | | | |
| 27 | 2 | 172B03-72600 | ROD ASSY, BUCKET | 1 | | | | | | | |
| 27-1 | 2 | 172B03-72601 | ROD ASSY, BUCKET | 1 | | | | | | S | 1 |
| | (A=M60505) | | | | | | | | | | |
| 28 | 3 | 172165-72310 | BUSH, 40-40 | 1 | | | | | | | |
| 28-1 | 3 | 172168-72240 | BUSH, 38-50-40 | 1 | | | | | | S | 1 |
| | (A=M60505) | | | | | | | | | | |
| 30 | 3 | 172448-72650 | SEAL, DUST 40X50X4 | 2 | | | | | | | |
| 30-1 | 3 | 172168-81270 | SEAL, DUST 38X50X4 | 2 | | | | | | S | 1 |
| | (A=M60505) | | | | | | | | | | |
| 31 | 2 | 172B03-72650 | HEAD ASSY, 70 40 | 1 | | | | | | | |
| 33 | 3 | 172141-73090 | RING, SPRING 50 | 1 | | | | | | | |
| 34 | 3 | 24550-040300 | BUSH, 40X30 | 1 | | | | | | | |
| 35 | 2 | 172141-76900 | CONNECTOR ASSY, 1/2L | 2 | | | | | | | |
| 36 | 3 | 24315-000180 | O-RING, 1BP18.0 | 2 | | | | | | | |
| 37 | 2 | 24761-040000 | NIPPLE, GREASE B | 1 | | | | | | | |
| 38 | 2 | 26014-100202 | BOLT, M10X 20 | 1 | | | | | | | |
| 39 | 1 | 172A79-72570 | WASHER, 10.5X24X4.5 | 2 | | | | | | | |
| 40 | 1 | 172B03-72670 | GUIDE ASSY, 655 | 1 | | | | | | | |
| 41 | 1 | 172A47-72840 | BOLT, M6X16 | 1 | | | | | | | |
| 42 | 1 | 22217-100000 | WASHER, SPRING 10 | 1 | | | | | | | |
| 43 | 1 | 22217-100000 | WASHER, SPRING 10 | 2 | | | | | | | |
| 44 | 1 | 26076-100252 | BOLT, 10.910X 25 | 2 | | | | | | | |
| 45 | 1 | 26116-100162 | BOLT, M10X 16 PLATED | 1 | | | | | | | |
| 46 | 1 | 933147-03400 | WASHER, BRAKE ARM | 1 | | | | | | | |
| 47 | 1 | 933168-14170 | SPRING, 16 | 2 | | | | | | | |

Remarks
(1)D=Ref.No.6,27,28,30:40mm,
Ref.No.6-1,27-1,28-1,30-1:38mm.
(2)A : no mark.
Replacement with Fig.140(70A) No1.

N:Old $\overset{\text{Yes}}{\underset{\text{No}}{\leftrightarrows}}$ New, Q:Old $\overset{\text{No}}{\underset{\text{Yes}}{\leftrightarrows}}$ New, R:Old $\overset{\text{Yes}}{\underset{\text{Yes}}{\leftrightarrows}}$ New, S:Old $\overset{\text{No}}{\underset{\text{No}}{\leftrightarrows}}$ New, W:Add, Z:Discontinued, F:Interchangeable by set, K:Q'ty Change

Copyright (C) YANMAR GLOBAL CS CO., LTD. All RightsReserved.

# Fig.140. (70A)BUCKET CYLINDER(K SPEC.)(FROM M60689)

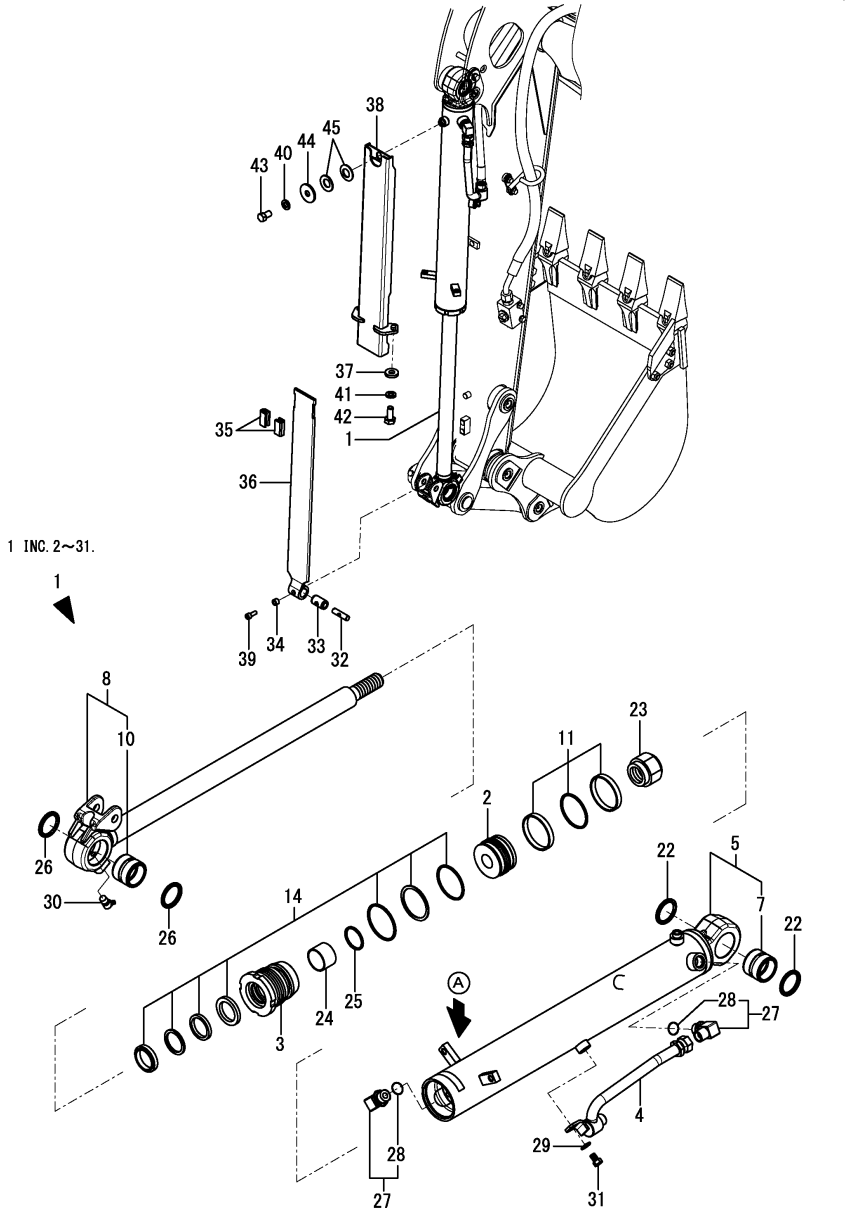


(A)=VIO30-6B P(KR)
(B)=
(C)=
(D)=
(E)=
(F)=

| No. | Lev. | Parts No. | Description | Q'ty (A) | (B) | (C) | (D) | (E) | (F) | I | R |
|---|---|---|---|---|---|---|---|---|---|---|---|
| 1 | 1 (A=M60689) | 172B03-70500 | CYLINDER ASSY,BUCKET | 1 | | | | | | W | |
| 2 | 2 | 172B03-70530 | PISTON | 1 | | | | | | | |
| 3 | 2 | 172B03-70540 | HEAD | 1 | | | | | | | |
| 4 | 2 | 172B03-70620 | PIPE ASSY | 1 | | | | | | | |
| 5 | 2 | 172B03-70630 | REPAIR KIT, TUBE AS | 1 | | | | | | | |
| 7 | 3 | 172B16-72860 | BUSH, PIN 40 | 1 | | | | | | | |
| 8 | 2 | 172B03-70640 | REPAIR KIT, ROD AS | 1 | | | | | | | |
| 10 | 3 | 172B16-72400 | BUSH, PIN 38 | 1 | | | | | | | |
| 11 | 2 | 172B03-70650 | SEAL KIT, PISTON | 1 | | | | | | | |
| 14 | 2 | 172B03-70660 | SEAL KIT, HEAD | 1 | | | | | | | |
| 22 | 2 | 172B16-71200 | SEAL, DUST PIN 40 | 2 | | | | | | | |
| 23 | 2 | 172B16-72090 | NUT, LOCK | 1 | | | | | | | |
| 24 | 2 | 172B16-72140 | SLEEVE | 1 | | | | | | | |
| 25 | 2 | 172B16-72150 | RING, RETAINING | 1 | | | | | | | |
| 26 | 2 | 172B16-72540 | SEAL, DUST PIN 38 | 2 | | | | | | | |
| 27 | 2 | 172141-76900 | CONNECTOR ASSY, 1/2L | 2 | | | | | | | |
| 28 | 3 | 24315-000180 | O-RING, 1BP18.0 | 2 | | | | | | | |
| 29 | 2 | 22137-100000 | WASHER, 10 | 1 | | | | | | | |
| 30 | 2 | 24761-040000 | NIPPLE, GREASE B | 1 | | | | | | | |
| 31 | 2 | 26076-100162 | BOLT, 10 X 16 | 1 | | | | | | | |
| 32 | 1 | 172A23-72043 | SHAFT, 14X53 | 1 | | | | | | | |
| 33 | 1 | 172A23-72052 | GROMMET | 1 | | | | | | | |
| 34 | 1 | 172A46-72070 | SPACER | 1 | | | | | | | |
| 35 | 1 | 172A23-72081 | GUIDE, SLIDE | 2 | | | | | | | |
| 36 | 1 | 172B03-72340 | PLATE, SLIDE 650 | 1 | | | | | | | |
| 37 | 1 | 172A79-72570 | WASHER, 10.5X24X4.5 | 2 | | | | | | | |
| 38 | 1 | 172B03-72670 | GUIDE ASSY, 655 | 1 | | | | | | | |
| 39 | 1 | 172A47-72840 | BOLT, M6X16 | 1 | | | | | | | |
| 40 | 1 | 22217-100000 | WASHER, SPRING 10 | 1 | | | | | | | |
| 41 | 1 | 22217-100000 | WASHER, SPRING 10 | 2 | | | | | | | |
| 42 | 1 | 26076-100252 | BOLT, 10.910X 25 | 2 | | | | | | | |
| 43 | 1 | 26116-100162 | BOLT, M10X 16 PLATED | 1 | | | | | | | |
| 44 | 1 | 933147-03400 | WASHER, BRAKE ARM | 1 | | | | | | | |
| 45 | 1 | 933168-14170 | SPRING, 16 | 2 | | | | | | | |

Remarks
* A : There is serial No.(K1600XXX).

N:Old $\overset{\text{Yes}}{\underset{\text{No}}{\rightleftarrows}}$ New, Q:Old $\overset{\text{No}}{\underset{\text{Yes}}{\rightleftarrows}}$ New, R:Old $\overset{\text{Yes}}{\underset{\text{Yes}}{\rightleftarrows}}$ New, S:Old $\overset{\text{No}}{\underset{\text{No}}{\rightleftarrows}}$ New, W:Add, Z:Discontinued, F:Interchangeable by set, K:Q'ty Change

Copyright (C) YANMAR GLOBAL CS CO., LTD. All RightsReserved.

# Fig.71. SWING CYLINDER(Y SPEC.)(TO M60688)



(A)=VIO30-6B P(KR)
(B)=
(C)=
(D)=
(E)=
(F)=

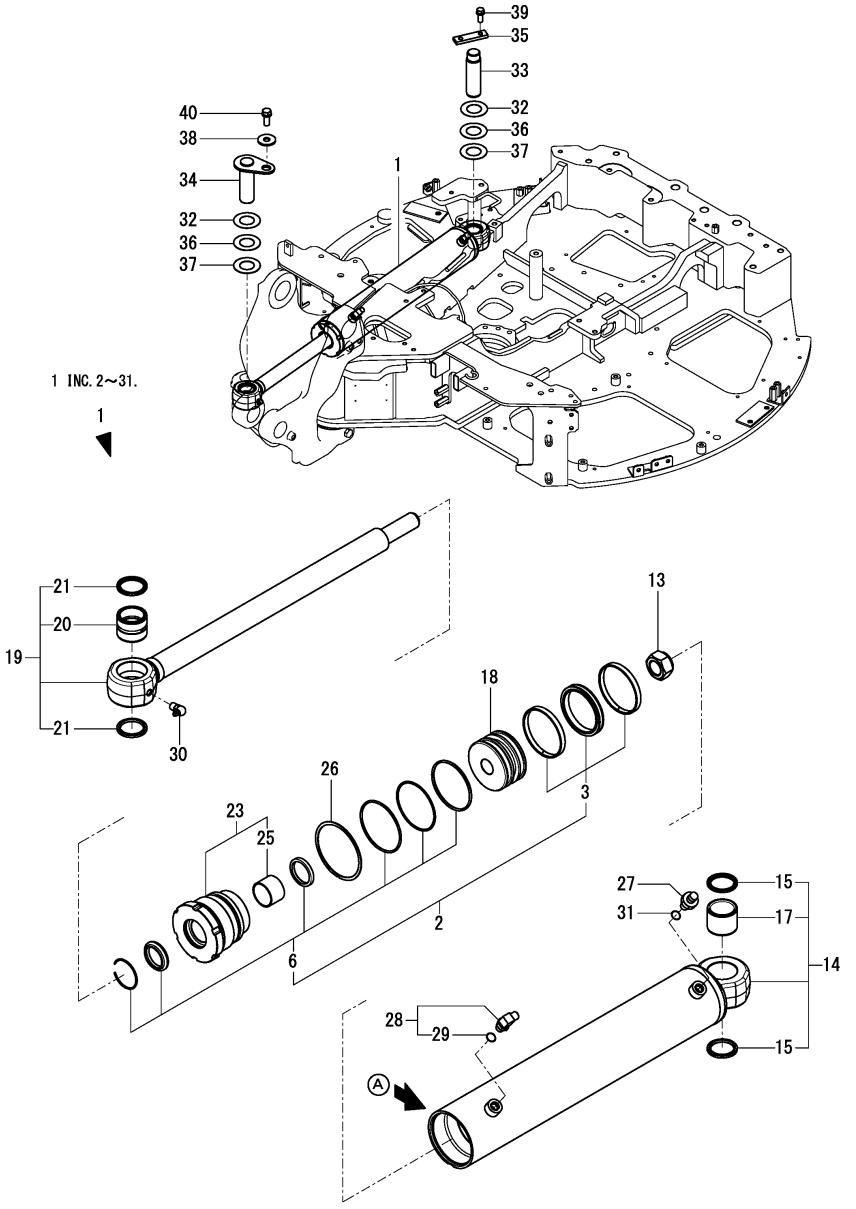


| No. | Lev. | Parts No. | Description | Q'ty (A) | (B) | (C) | (D) | (E) | (F) | I | R |
|---|---|---|---|---|---|---|---|---|---|---|---|
| 1 | 1 (A=M60689) | 172B03-72700 | CYLINDER ASSY, SWING | 1 | | | | | | Z | 1 |
| 2 | 2 | 172B03-72070 | SEAL SET, 90X40 | 1 | | | | | | | |
| 3 | 3 | 172B03-72390 | SEAL SET, PISTON 90 | 1 | | | | | | | |
| 6 | 3 | 172A46-72910 | SEAL SET, HEAD 90X40 | 1 | | | | | | | |
| 13 | 2 | 172141-72250 | U-NUT, M27 | 1 | | | | | | | |
| 14 | 2 | 172B03-72710 | TUBE ASSY, SWING | 1 | | | | | | | |
| 15 | 3 | 172448-72650 | SEAL, DUST 40X50X4 | 2 | | | | | | | |
| 17 | 3 | 172458-72740 | BUSH, 40X40 SO | 1 | | | | | | | |
| 18 | 2 | 172B03-72740 | PISTON, 90 27 | 1 | | | | | | | |
| 19 | 2 | 172B03-72750 | ROD ASSY, SWING | 1 | | | | | | | |
| 20 | 3 | 172165-72310 | BUSH, 40-40 | 1 | | | | | | | |
| 21 | 3 | 172448-72650 | SEAL, DUST 40X50X4 | 2 | | | | | | | |
| 23 | 2 | 172B03-72780 | HEAD ASSY, SWING | 1 | | | | | | | |
| 25 | 3 | 24550-040300 | BUSH, 40X30 | 1 | | | | | | | |
| 26 | 2 | 172151-72870 | WASHER, LOCK 90 | 1 | | | | | | | |
| 27 | 2 | 172123-76121 | ADAPTER, M/M PF1/4 | 1 | | | | | | | |
| 28 | 2 | 172141-76181 | CONNECTOR ASSY, 02FF | 1 | | | | | | | |
| 29 | 3 | 41851-000110 | O-RING, P11.0 HNBR | 1 | | | | | | | |
| 30 | 2 | 24761-050000 | NIPPLE, GREASE C | 1 | | | | | | | |
| 31 | 2 | 41851-000110 | O-RING, P11.0 HNBR | 1 | | | | | | | |
| 32 | 1 | 172A25-81900 | SHIM, 40X75X0.8 | 2 | | | | | | | |
| 33 | 1 | 172A46-81901 | PIN, 40X123 | 1 | | | | | | | |
| 34 | 1 | 172B03-81950 | PIN ASSY, 40X122 | 1 | | | | | | | |
| 35 | 1 | 172A47-81980 | PLATE, LOCK | 1 | | | | | | | |
| 36 | 1 | 172165-82580 | SHIM, 40X75X0.5 | 2 | | | | | | | |
| 37 | 1 | 172165-82590 | SHIM, 40X75X1.2 | 2 | | | | | | | |
| 38 | 1 | 22157-120000 | WASHER, 12 | 1 | | | | | | | |
| 39 | 1 | 26013-100252 | BOLT, M10X 25 | 2 | | | | | | | |
| 40 | 1 | 26013-120302 | BOLT, M12X 30 | 1 | | | | | | | |

Remarks
(1)A : no mark.
Replacement with Fig.141(71A) No1.

N:Old $\overset{\text{Yes}}{\underset{\text{No}}{\rightleftarrows}}$ New, Q:Old $\overset{\text{No}}{\underset{\text{Yes}}{\rightleftarrows}}$ New, R:Old $\overset{\text{Yes}}{\underset{\text{Yes}}{\rightleftarrows}}$ New, S:Old $\overset{\text{No}}{\underset{\text{No}}{\rightleftarrows}}$ New, W:Add, Z:Discontinued, F:Interchangeable by set, K:Q'ty Change

Copyright (C) YANMAR GLOBAL CS CO., LTD. All RightsReserved.

# Fig.141. (71A)SWING CYLINDER(K SPEC.)(FROM M60689)

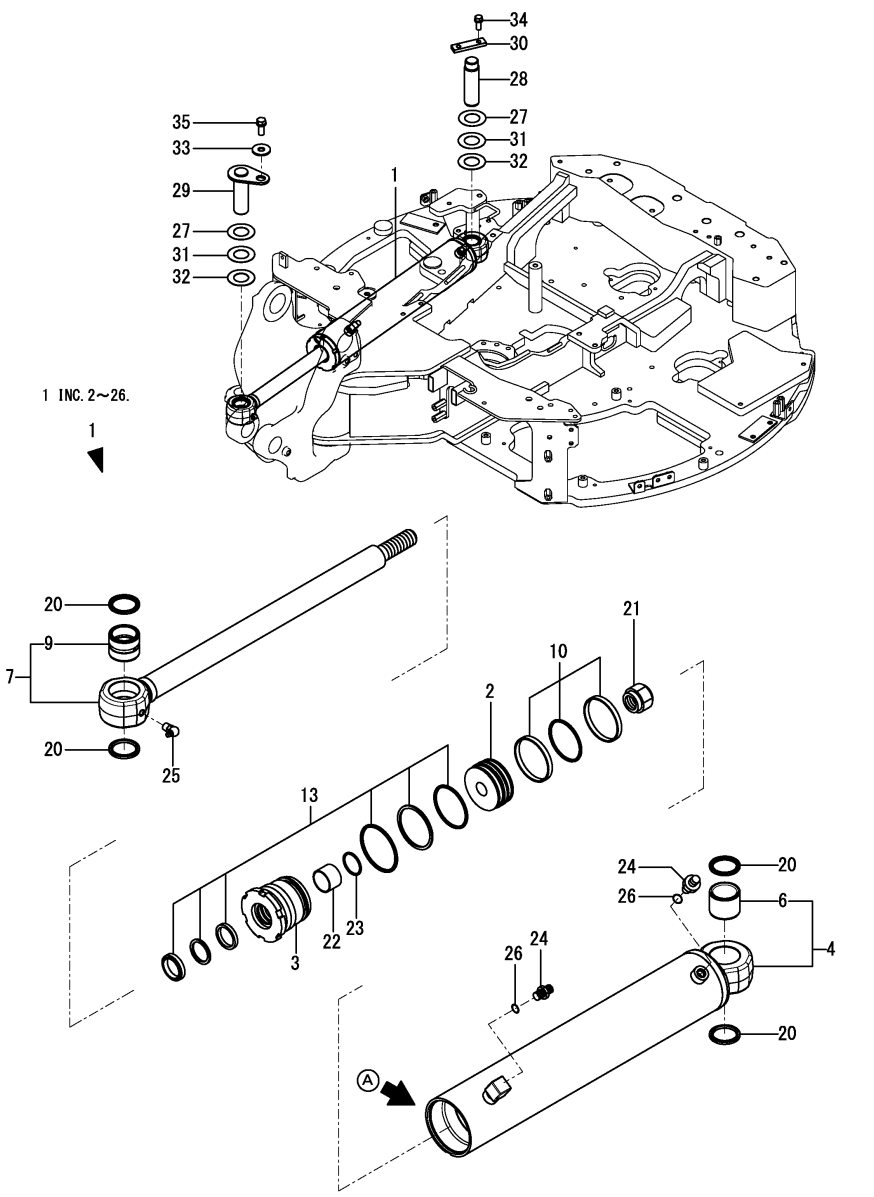


(A)=VIO30-6B P(KR)
(B)=
(C)=
(D)=
(E)=
(F)=

| No. | Lev. | Parts No. | Description | Q'ty (A) | (B) | (C) | (D) | (E) | (F) | I | R |
|---|---|---|---|---|---|---|---|---|---|---|---|
| 1 | 1 | 172B03-70700 | CYLINDER ASSY, SWING | 1 | | | | | | W | |
| | (A=M60689) | | | | | | | | | | |
| 2 | 2 | 172B03-70730 | PISTON | 1 | | | | | | | |
| 3 | 2 | 172B03-70740 | HEAD | 1 | | | | | | | |
| 4 | 2 | 172B03-70760 | REPAIR KIT, TUBE AS | 1 | | | | | | | |
| 6 | 3 | 172458-72740 | BUSH, 40X40 SO | 1 | | | | | | | |
| 6-1 | 3 | 172458-72741 | BUSH, 40X40SO | 1 | | | | | | N | |
| | (A=*2016.03.) | | | | | | | | | | |
| 6-2 | 3 | 172B03-70870 | BUSH, 40X40SO | 1 | | | | | | N | |
| | (A=M60942) | | | | | | | | | | |
| 7 | 2 | 172B03-70770 | REPAIR KIT, ROD AS | 1 | | | | | | | |
| 9 | 3 | 172B16-72860 | BUSH, PIN 40 | 1 | | | | | | | |
| 10 | 2 | 172B03-70780 | SEAL KIT, PISTON | 1 | | | | | | | |
| 13 | 2 | 172B03-70790 | SEAL KIT, HEAD | 1 | | | | | | | |
| 20 | 2 | 172B16-71200 | SEAL, DUST PIN 40 | 4 | | | | | | | |
| 21 | 2 | 172B16-72090 | NUT, LOCK | 1 | | | | | | | |
| 22 | 2 | 172B16-72140 | SLEEVE | 1 | | | | | | | |
| 23 | 2 | 172B16-72150 | RING, RETAINING | 1 | | | | | | | |
| 24 | 2 | 172123-76121 | ADAPTER, M/M PF1/4 | 2 | | | | | | | |
| 25 | 2 | 24761-050000 | NIPPLE, GREASE C | 1 | | | | | | | |
| 26 | 2 | 41851-000110 | O-RING, P11.0 HNBR | 2 | | | | | | | |
| 27 | 1 | 172A25-81900 | SHIM, 40X75X0.8 | 2 | | | | | | | |
| 28 | 1 | 172A46-81901 | PIN, 40X123 | 1 | | | | | | | |
| 29 | 1 | 172B03-81950 | PIN ASSY, 40X122 | 1 | | | | | | | |
| 30 | 1 | 172A47-81980 | PLATE, LOCK | 1 | | | | | | | |
| 31 | 1 | 172165-82580 | SHIM, 40X75X0.5 | 2 | | | | | | | |
| 32 | 1 | 172165-82590 | SHIM, 40X75X1.2 | 2 | | | | | | | |
| 33 | 1 | 22157-120000 | WASHER, 12 | 1 | | | | | | | |
| 34 | 1 | 26013-100252 | BOLT, M10X 25 | 2 | | | | | | | |
| 35 | 1 | 26013-120302 | BOLT, M12X 30 | 1 | | | | | | | |

Remarks
* A : There is serial No.(K1611XXX).

N:Old $\overset{\text{Yes}}{\underset{\text{No}}{\rightleftarrows}}$ New, Q:Old $\overset{\text{No}}{\underset{\text{Yes}}{\rightleftarrows}}$ New, R:Old $\overset{\text{Yes}}{\underset{\text{Yes}}{\rightleftarrows}}$ New, S:Old $\overset{\text{No}}{\underset{\text{No}}{\rightleftarrows}}$ New, W:Add, Z:Discontinued, F:Interchangeable by set, K:Q'ty Change

Copyright (C) YANMAR GLOBAL CS CO., LTD. All RightsReserved.

# Fig.72. BLADE CYLINDER(Y SPEC.)(TO M60688)



(A)=VIO30-6B P(KR)
(B)=
(C)=
(D)=
(E)=
(F)=

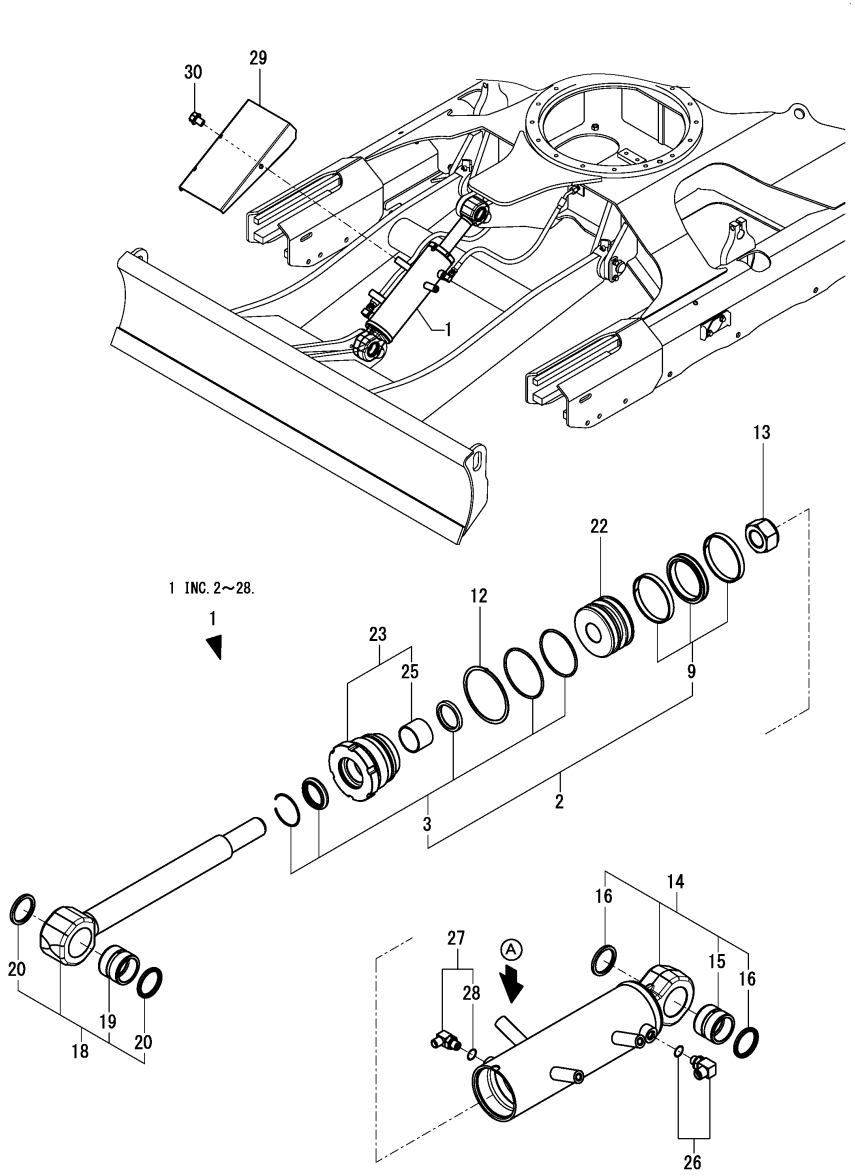


| No. | Lev. | Parts No. | Description | Q'ty (A) | (B) | (C) | (D) | (E) | (F) | I | R |
|---|---|---|---|---|---|---|---|---|---|---|---|
| 1 | 1 (A=M60689) | 172B03-72800 | CYLINDER ASSY, BLADE | 1 | | | | | | Z | 1 |
| 2 | 2 | 172B03-72080 | SEAL SET, 80X40 | 1 | | | | | | | |
| 3 | 3 | 172458-72050 | SEAL SET, HEAD 80X40 | 1 | | | | | | | |
| 9 | 3 | 172B03-72930 | SEAL SET, PISTON 80 | 1 | | | | | | | |
| 12 | 2 | 172142-72260 | WASHER, LOCK 80 B | 1 | | | | | | | |
| 13 | 2 | 172175-72550 | U-NUT, M30X3 | 1 | | | | | | | |
| 14 | 2 | 172B03-72810 | TUBE ASSY, BLADE | 1 | | | | | | | |
| 15 | 3 | 172168-72410 | BUSH, 40-50-40 | 1 | | | | | | | |
| 16 | 3 | 172448-72650 | SEAL, DUST 40X50X4 | 2 | | | | | | | |
| 18 | 2 | 172B03-72850 | ROD ASSY, BLADE | 1 | | | | | | | |
| 19 | 3 | 172168-72410 | BUSH, 40-50-40 | 1 | | | | | | | |
| 20 | 3 | 172448-72650 | SEAL, DUST 40X50X4 | 2 | | | | | | | |
| 22 | 2 | 172B03-72880 | PISTON, 80 30 | 1 | | | | | | | |
| 23 | 2 | 172B03-72950 | HEAD ASSY, 80 40 | 1 | | | | | | | |
| 25 | 3 | 24550-040300 | BUSH, 40X30 | 1 | | | | | | | |
| 26 | 2 | 172173-76121 | CONNECTOR ASSY | 1 | | | | | | | |
| 27 | 2 | 172141-76181 | CONNECTOR ASSY, 02FF | 1 | | | | | | | |
| 28 | 3 | 41851-000110 | O-RING, P11.0 HNBR | 1 | | | | | | | |
| 29 | 1 | 172B03-72900 | COVER ASSY, BLADE | 1 | | | | | | | |
| 30 | 1 | 26106-100122 | BOLT, M10X 12 PLATED | 3 | | | | | | | |

Remarks
(1)A : no mark.
Replacement with Fig.142(72A) No1.

N:Old $\overset{\text{Yes}}{\underset{\text{No}}{\leftrightarrows}}$ New, Q:Old $\overset{\text{No}}{\underset{\text{Yes}}{\leftrightarrows}}$ New, R:Old $\overset{\text{Yes}}{\underset{\text{Yes}}{\leftrightarrows}}$ New, S:Old $\overset{\text{No}}{\underset{\text{No}}{\leftrightarrows}}$ New, W:Add, Z:Discontinued, F:Interchangeable by set, K:Q'ty Change

Copyright (C) YANMAR GLOBAL CS CO., LTD. All RightsReserved.

# Fig.142. (72A)BLADE CYLINDER(K SPEC.)(FROM M60689)

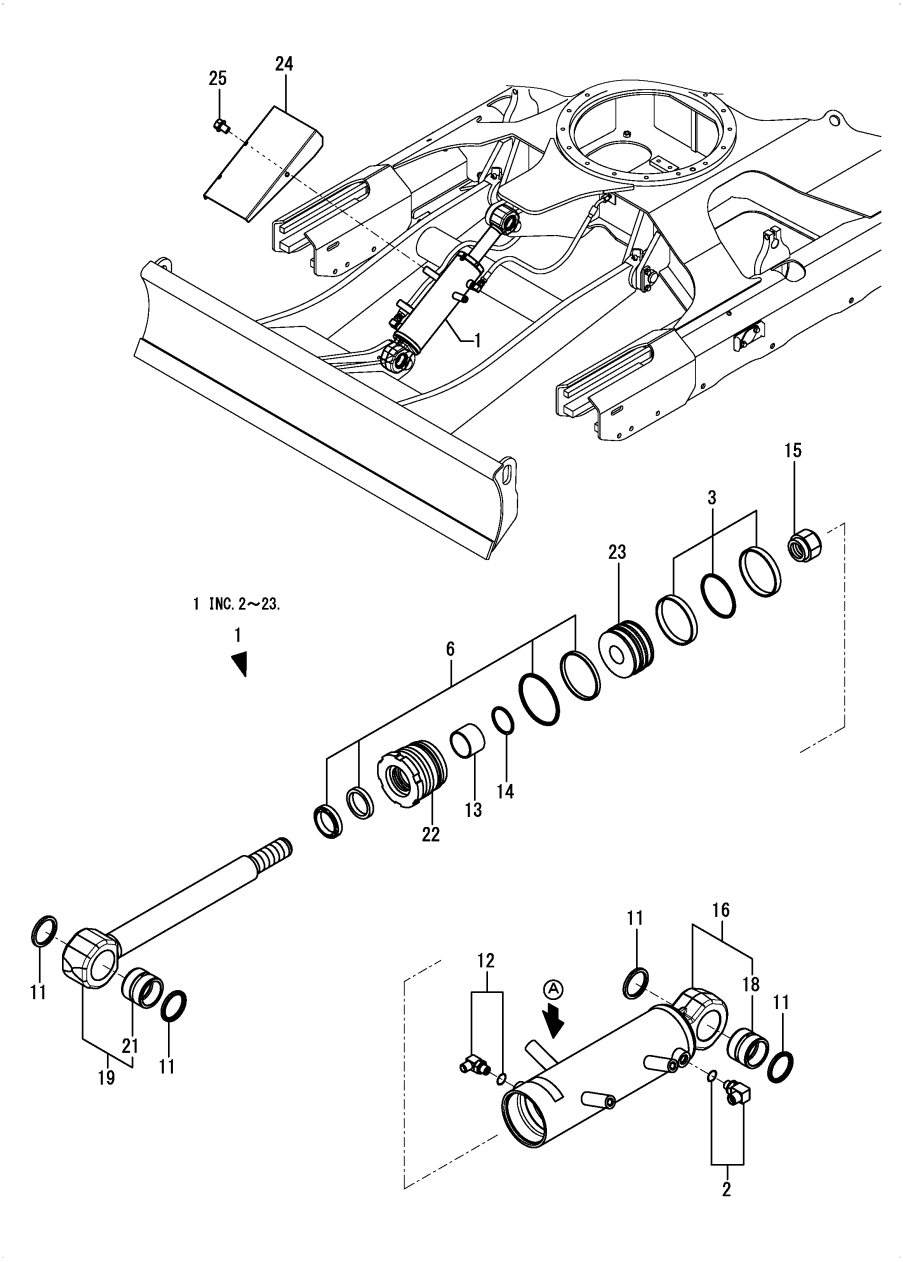


(A)=VIO30-6B P(KR)
(B)=
(C)=
(D)=
(E)=
(F)=

| No. | Lev. | Parts No. | Description | Q'ty (A) | (B) | (C) | (D) | (E) | (F) | I | R |
|---|---|---|---|---|---|---|---|---|---|---|---|
| 1 | 1 (A=M60689) | 172B03-70800 | CYLINDER ASSY, BLADE | 1 | | | | | | W | |
| 2 | 2 | 172B03-70840 | CONNECTOR ASSY, 3/8L | 1 | | | | | | | |
| 3 | 2 | 172B03-70850 | SEAL KIT, PISTON | 1 | | | | | | | |
| 6 | 2 | 172B03-70860 | SEAL SET, HEAD | 1 | | | | | | | |
| 11 | 2 | 172B16-71200 | SEAL, DUST PIN 40 | 4 | | | | | | | |
| 12 | 2 | 172B16-71210 | ELBOW ASSY, 90 G1/4 | 1 | | | | | | | |
| 13 | 2 | 172B16-72140 | SLEEVE | 1 | | | | | | | |
| 14 | 2 | 172B16-72150 | RING, RETAINING | 1 | | | | | | | |
| 15 | 2 | 172B16-72430 | NUT, LOCK | 1 | | | | | | | |
| 16 | 2 | 172B16-72750 | REPAIR KIT, TUBE AS | 1 | | | | | | | |
| 18 | 3 | 172B16-72860 | BUSH, PIN 40 | 1 | | | | | | | |
| 19 | 2 | 172B16-72760 | REPAIR KIT, ROD AS | 1 | | | | | | | |
| 21 | 3 | 172B16-72860 | BUSH, PIN 40 | 1 | | | | | | | |
| 22 | 2 | 172B16-72870 | HEAD | 1 | | | | | | | |
| 23 | 2 | 172B16-72880 | PISTON | 1 | | | | | | | |
| 24 | 1 | 172B03-72900 | COVER ASSY, BLADE | 1 | | | | | | | |
| 25 | 1 | 26106-100122 | BOLT, M10X 12 PLATED | 3 | | | | | | | |

Remarks
* A : There is serial No.(K1621XXX).

N:Old $\overset{\text{Yes}}{\underset{\text{No}}{\leftrightarrows}}$ New, Q:Old $\overset{\text{No}}{\underset{\text{Yes}}{\leftrightarrows}}$ New, R:Old $\overset{\text{Yes}}{\underset{\text{Yes}}{\leftrightarrows}}$ New, S:Old $\overset{\text{No}}{\underset{\text{No}}{\leftrightarrows}}$ New, W:Add, Z:Discontinued, F:Interchangeable by set, K:Q'ty Change

Copyright (C) YANMAR GLOBAL CS CO., LTD. All RightsReserved.

# Fig.73. TRAVEL MOTOR



(A)=VIO30-6B P(KR)
(B)=
(C)=
(D)=
(E)=
(F)=

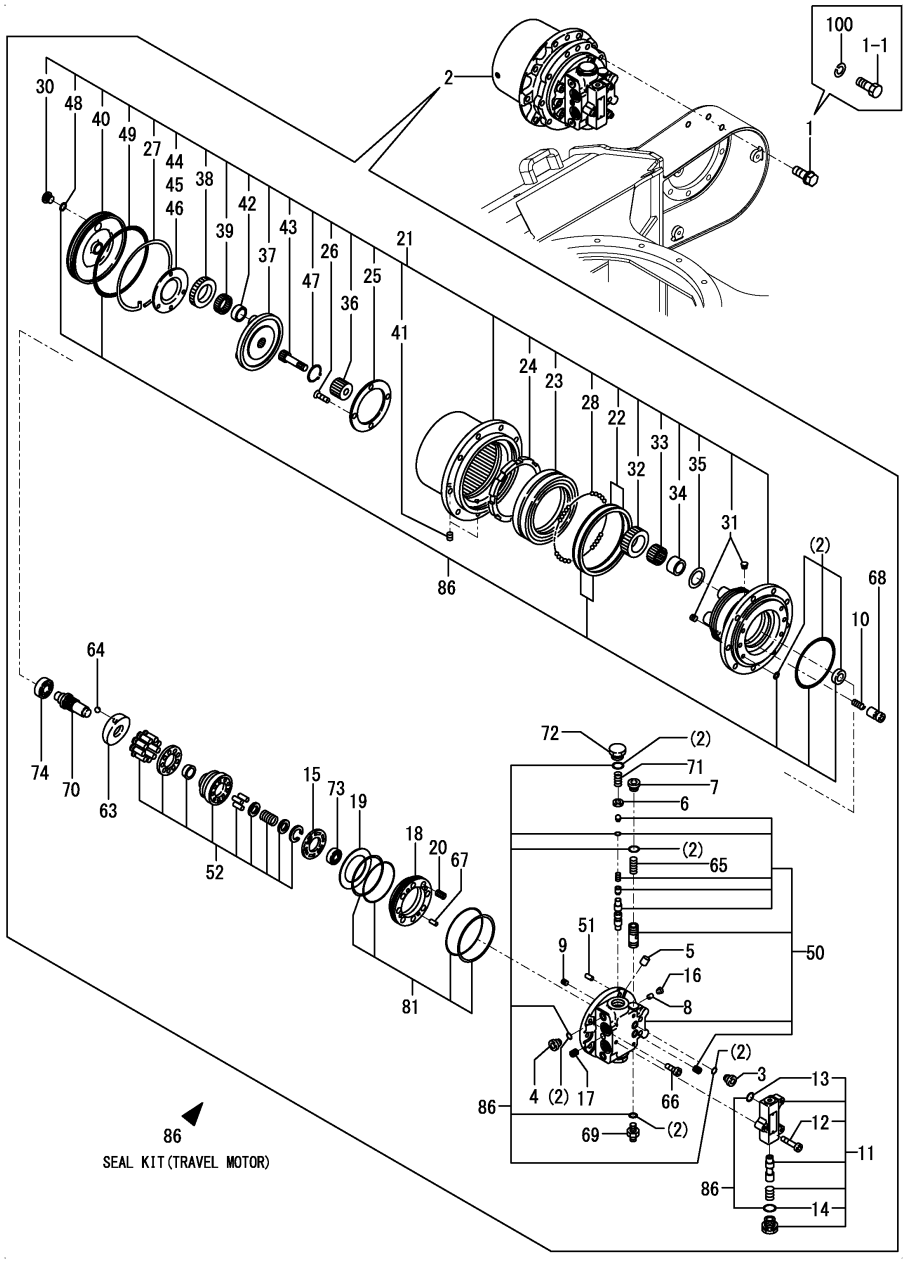


| No. | Lev. | Parts No. | Description | Q'ty (A) | (B) | (C) | (D) | (E) | (F) | I | R |
|---|---|---|---|---|---|---|---|---|---|---|---|
| 1 | 1 | 26013-120302 | BOLT, M12X 30 | 18 | | | | | | | |
| 1-1 | 1 (A=MBF227) | 172B03-36300 | BOLT, 10.9 M12X30 | 18 | | | | | | S | 1 |
| 2 | 1 | 172B03-73300 | MOTOR ASSY, TRAVEL | 2 | | | | | | | |
| 3 | 2 | 1A6240-37360 | PLUG | 4 | | | | | | | |
| 4 | 2 | 172148-70301 | PLUG | 4 | | | | | | | |
| 5 | 2 | 172148-70340 | ORIFICE | 8 | | | | | | | |
| 6 | 2 | 172122-70460 | SEAT, SPRING | 4 | | | | | | | |
| 7 | 2 | 172147-70500 | PLUG | 2 | | | | | | | |
| 8 | 2 | 172312-74790 | ORIFICE | 8 | | | | | | | |
| 9 | 2 | 172312-74790 | ORIFICE | 4 | | | | | | | |
| 10 | 2 | 172168-71951 | SPRING | 4 | | | | | | | |
| 11 | 2 | 172B03-73320 | VALVE ASSY | 2 | | | | | | | |
| 12 | 3 | 172A47-73320 | BOLT, SOCKET HEAD | 6 | | | | | | | |
| 13 | 3 | 24315-000120 | O-RING, 1BP12.0 | 6 | | | | | | | |
| 14 | 3 | 24315-000140 | O-RING, 1BP14.0 | 4 | | | | | | | |
| 15 | 2 | 172638-73330 | PLATE, VALVE | 2 | | | | | | | |
| 16 | 2 | 172B03-73330 | PLUG | 6 | | | | | | | |
| 17 | 2 | 172B03-73340 | PLUG, M10X1.5 | 2 | | | | | | | |
| 18 | 2 | 172B03-73350 | PISTON, BRAKE | 2 | | | | | | | |
| 19 | 2 | 172B03-73360 | DISK | 2 | | | | | | | |
| 20 | 2 | 172B03-73370 | SPRING | 16 | | | | | | | |
| 21 | 2 | 172B03-73410 | GEAR ASSY, REDUCTION | 2 | | | | | | | |
| 22 | 3 | 172141-70020 | SEAL, FLOATING | 2 | | | | | | | |
| 23 | 3 | 172141-70030 | BEARING, ANGULAR | 2 | | | | | | | |
| 24 | 3 | 172141-70041 | NUT, RING | 2 | | | | | | | |
| 25 | 3 | 172141-70100 | PLATE, THRUST | 2 | | | | | | | |
| 26 | 3 | 172141-70110 | SCREW | 8 | | | | | | | |
| 27 | 3 | 172141-70230 | WIRE | 2 | | | | | | | |
| 28 | 3 | 172122-70350 | BALL, STEEL | 264 | | | | | | | |
| 30 | 3 | 172147-70500 | PLUG | 4 | | | | | | | |
| 31 | 3 | 172450-73330 | PLUG | 4 | | | | | | | |
| 32 | 3 | 172450-73350 | GEAR, PLANETARY B | 8 | | | | | | | |
| 33 | 3 | 172450-73360 | BEARING, NEEDLE | 8 | | | | | | | |
| 34 | 3 | 172450-73370 | LACE, INNER | 8 | | | | | | | |
| 35 | 3 | 172450-73380 | WASHER, THRUST | 8 | | | | | | | |
| 36 | 3 | 172450-73390 | GEAR, SUN | 2 | | | | | | | |
| 37 | 3 | 172450-73400 | HOLDER | 2 | | | | | | | |
| 38 | 3 | 172450-73410 | GEAR, PLANETARY A | 6 | | | | | | | |
| 39 | 3 | 172450-73420 | BEARING, NEEDLE | 6 | | | | | | | |
| 40 | 3 | 172B03-73420 | COVER | 2 | | | | | | | |
| 41 | 3 | 172122-73430 | PLUG | 4 | | | | | | | |
| 42 | 3 | 172450-73430 | LACE, INNER | 6 | | | | | | | |
| 43 | 3 | 172450-73440 | GEAR, DRIVE | 2 | | | | | | | |
| 44 | 3 | 172450-73450 | PLATE, THRUST | 2 | | | | | | | |
| 45 | 3 | 172450-73460 | PLATE, THRUST | 2 | | | | | | | |
| 46 | 3 | 172450-73470 | PLATE, THRUST | 2 | | | | | | | |
| 47 | 3 | 22242-000350 | RING, 35 | 2 | | | | | | | |
| 48 | 3 | 24315-000140 | O-RING, 1BP14.0 | 4 | | | | | | | |
| 49 | 3 | 24325-001550 | O-RING, 1BG155.0 | 2 | | | | | | | |
| 50 | 2 | 172B03-73460 | REPAIR KIT, PLATE | 2 | | | | | | | |

Remarks
(1)Interchangeable by simultaneous replacement with No.100.

N:Old ⇄ New (Yes/No), Q:Old ⇄ New (No/Yes), R:Old ⇄ New (Yes/Yes), S:Old ⇄ New (No/No), W:Add, Z:Discontinued, F:Interchangeable by set, K:Q'ty Change

++ CONTINUE ++

Copyright (C) YANMAR GLOBAL CS CO., LTD. All RightsReserved.

# Fig.73. TRAVEL MOTOR



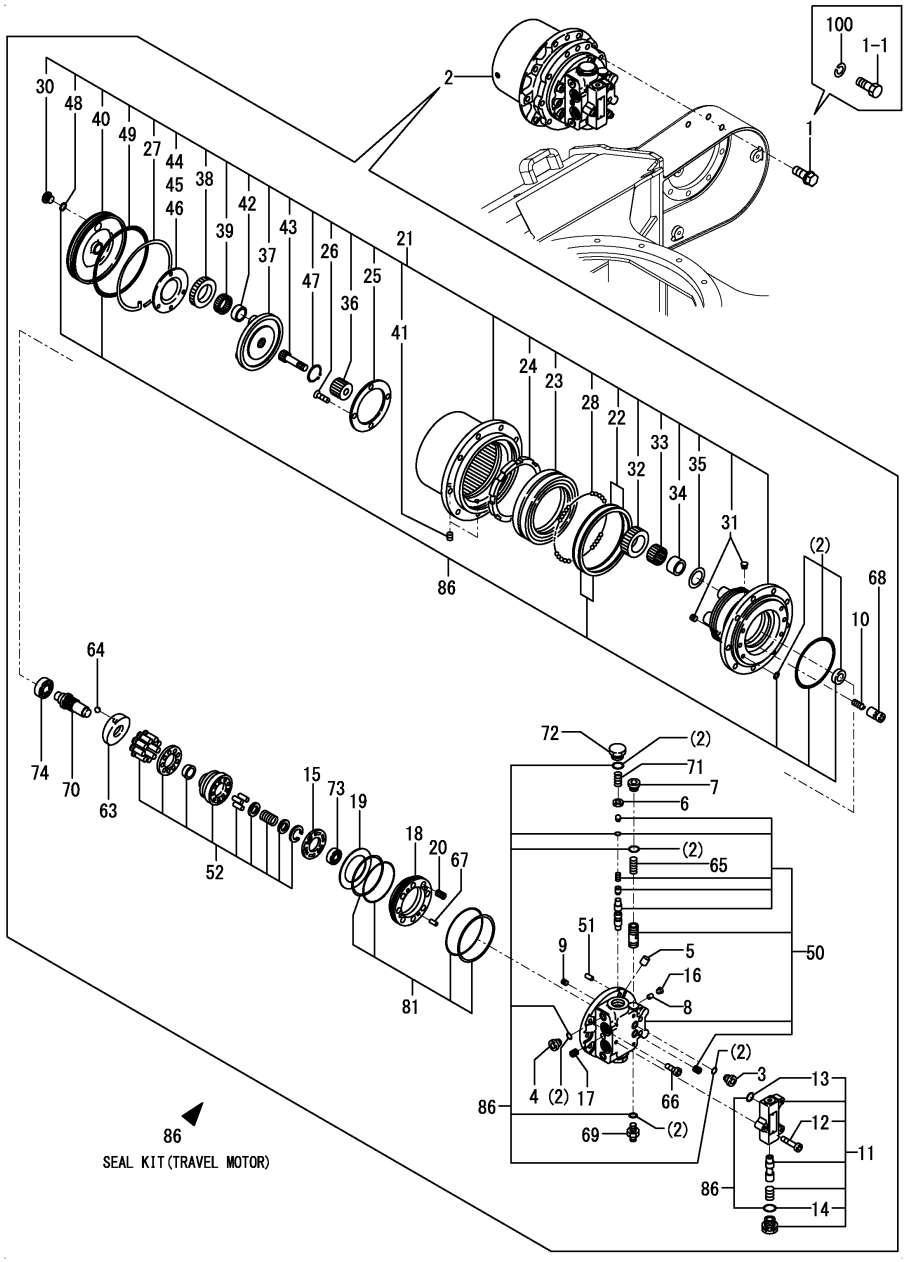


(A)=VIO30-6B P(KR)
(B)=
(C)=
(D)=
(E)=
(F)=

| No. | Lev. | Parts No. | Description | Q'ty (A) | (B) | (C) | (D) | (E) | (F) | I | R |
|---|---|---|---|---|---|---|---|---|---|---|---|
| 51 | 2 | 172122-73470 | PIN | 2 | | | | | | | |
| 52 | 2 | 172B03-73470 | REPAIR KIT, BLOCK | 2 | | | | | | | |
| 52-1 | 2 | 172B03-73471 | REPAIR KIT,CYL BLOCK | 2 | | | | | | | N |
| | (A=MBF276) | | | | | | | | | | |
| 63 | 2 | 172450-73501 | PLATE, SWASH | 2 | | | | | | | |
| 64 | 2 | 172450-73510 | BALL, STEEL | 4 | | | | | | | |
| 65 | 2 | 172A46-73520 | SPRING | 2 | | | | | | | |
| 66 | 2 | 172A46-73530 | BOLT, SOCKET HEAD | 12 | | | | | | | |
| 67 | 2 | 172A46-73540 | PIN | 8 | | | | | | | |
| 68 | 2 | 172450-73551 | PISTON ASSY | 4 | | | | | | | |
| 69 | 2 | 172A46-73560 | PLUG | 2 | | | | | | | |
| 70 | 2 | 172183-73670 | SHAFT | 2 | | | | | | | |
| 71 | 2 | 172458-73770 | SPRING | 4 | | | | | | | |
| 72 | 2 | 172460-73570 | CAP, STEERING WHEEL | 4 | | | | | | | |
| 73 | 2 | 24101-060024 | BEARING, BALL 6002 | 2 | | | | | | | |
| 74 | 2 | 24101-060044 | BEARING, BALL 6004 | 2 | | | | | | | |
| 81 | 2 | 172B03-73480 | SEAL KIT, BRAKE | 2 | | | | | | | |
| 86 | 1 | 172B03-73450 | SEAL KIT, MOTOR | 2 | | | | | | | |
| 100 | 1 | 22217-120000 | WASHER, SPRING 12 | 18 | | | | | | | W |
| | (A=MBF227) | | | | | | | | | | |

Remarks
(1)Interchangeable by simultaneous replacement with No.100.

N:Old $\overset{\text{Yes}}{\underset{\text{No}}{\rightleftarrows}}$ New, Q:Old $\overset{\text{No}}{\underset{\text{Yes}}{\rightleftarrows}}$ New, R:Old $\overset{\text{Yes}}{\underset{\text{Yes}}{\rightleftarrows}}$ New, S:Old $\overset{\text{No}}{\underset{\text{No}}{\rightleftarrows}}$ New, W:Add, Z:Discontinued, F:Interchangeable by set, K:Q'ty Change

Copyright (C) YANMAR GLOBAL CS CO., LTD. All RightsReserved.

# Fig.74. TURNING MOTOR



(A)=VIO30-6B P(KR)
(B)=
(C)=
(D)=
(E)=
(F)=

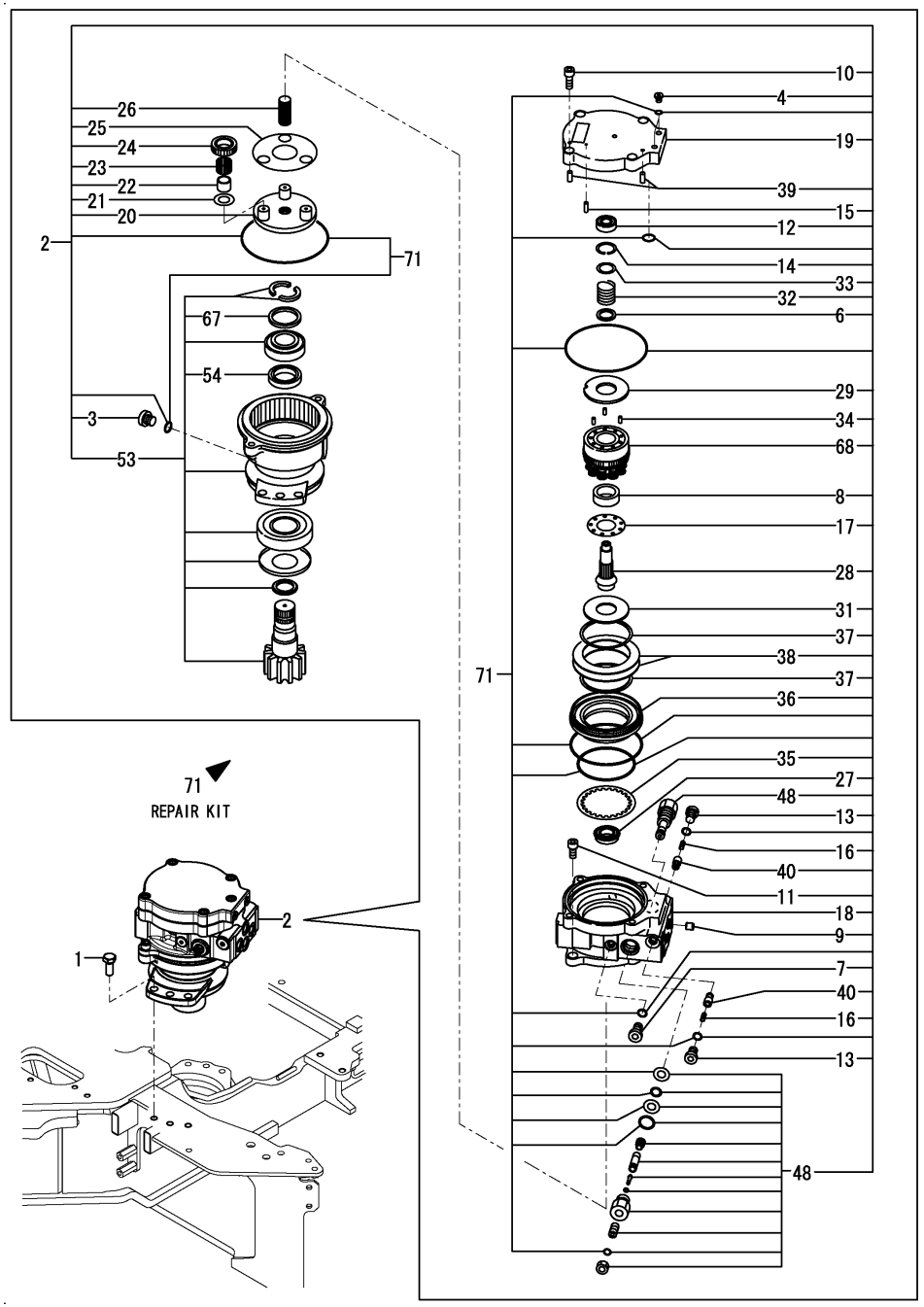


| No. | Lev. | Parts No. | Description | Q'ty (A) | (B) | (C) | (D) | (E) | (F) | I | R |
|---|---|---|---|---|---|---|---|---|---|---|---|
| 1 | 1 | 172455-29140 | BOLT, 14X35 | 6 | | | | | | | |
| 2 | 1 | 172458-73712 | MOTOR ASSY, SWING | 1 | | | | | | | |
| 3 | 2 | 1A6240-37360 | PLUG | 1 | | | | | | | |
| 4 | 2 | 1A6240-37360 | PLUG | 2 | | | | | | | |
| 6 | 2 | 172147-70280 | COLLAR | 1 | | | | | | | |
| 7 | 2 | 172148-70301 | PLUG | 1 | | | | | | | |
| 8 | 2 | 172147-70331 | HOLDER, RETAINER | 1 | | | | | | | |
| 9 | 2 | 172124-70380 | ORIFICE | 1 | | | | | | | |
| 10 | 2 | 172124-70390 | BOLT, SOCKET HEAD | 5 | | | | | | | |
| 11 | 2 | 172124-70390 | BOLT, SOCKET HEAD | 2 | | | | | | | |
| 12 | 2 | 172147-70390 | BEARING, BALL | 1 | | | | | | | |
| 13 | 2 | 172147-70500 | PLUG | 2 | | | | | | | |
| 14 | 2 | 172122-70630 | RING, SNAP | 1 | | | | | | | |
| 15 | 2 | 172122-73470 | PIN | 1 | | | | | | | |
| 16 | 2 | 172638-73470 | SPRING | 2 | | | | | | | |
| 17 | 2 | 172423-73530 | PLATE, RETAINER | 1 | | | | | | | |
| 18 | 2 | 172A45-73730 | CASE | 1 | | | | | | | |
| 19 | 2 | 172459-73740 | COVER | 1 | | | | | | | |
| 20 | 2 | 172450-73830 | COLLAR | 1 | | | | | | | |
| 21 | 2 | 172450-73850 | WASHER, THRUST | 3 | | | | | | | |
| 22 | 2 | 172450-73860 | LACE, INNER | 3 | | | | | | | |
| 23 | 2 | 172450-73870 | BEARING, NEEDLE | 3 | | | | | | | |
| 24 | 2 | 172458-73970 | GEAR, PLANETARY | 3 | | | | | | | |
| 25 | 2 | 172458-73980 | PLATE, THRUST | 1 | | | | | | | |
| 26 | 2 | 172458-73990 | GEAR, DRIVE | 1 | | | | | | | |
| 27 | 2 | 172458-74310 | BEARING, BALL | 1 | | | | | | | |
| 28 | 2 | 172458-74320 | SHAFT | 1 | | | | | | | |
| 29 | 2 | 172458-74330 | PLATE, VALVE | 1 | | | | | | | |
| 31 | 2 | 172450-77050 | PLATE, THRUST | 1 | | | | | | | |
| 32 | 2 | 172450-77070 | SPRING | 1 | | | | | | | |
| 33 | 2 | 172450-77080 | WASHER | 1 | | | | | | | |
| 34 | 2 | 172450-77090 | PIN | 3 | | | | | | | |
| 35 | 2 | 172450-77110 | DISK | 1 | | | | | | | |
| 36 | 2 | 172450-77120 | PISTON, BRAKE | 1 | | | | | | | |
| 37 | 2 | 172450-77130 | SEAT, SPRING | 2 | | | | | | | |
| 38 | 2 | 172450-77140 | SPRING ASSY, DISK | 1 | | | | | | | |
| 39 | 2 | 172450-77170 | PIN | 2 | | | | | | | |
| 40 | 2 | 172450-77190 | VALVE, CHECK | 2 | | | | | | | |
| 48 | 2 | 172458-74340 | VALVE ASSY, RELIEF | 2 | | | | | | | |
| 53 | 2 | 172A45-73720 | HOUSING ASSY | 1 | | | | | | | |
| 54 | 3 | 172450-73751 | SEAL, OIL | 1 | | | | | | | |
| 67 | 3 | 172458-73960 | COLLAR | 1 | | | | | | | |
| 68 | 2 | 172450-77220 | BLOCK KIT, CYLINDER | 1 | | | | | | | |
| 71 | 1 | 172458-74910 | REPAIR KIT | 1 | | | | | | | |

N:Old $\overset{\text{Yes}}{\underset{\text{No}}{\rightleftarrows}}$ New, Q:Old $\overset{\text{No}}{\underset{\text{Yes}}{\rightleftarrows}}$ New, R:Old $\overset{\text{Yes}}{\underset{\text{Yes}}{\rightleftarrows}}$ New, S:Old $\overset{\text{No}}{\underset{\text{No}}{\rightleftarrows}}$ New, W:Add, Z:Discontinued, F:Interchangeable by set, K:Q'ty Change

Copyright (C) YANMAR GLOBAL CS CO., LTD. All RightsReserved.

# Fig.75. SWIVEL JOINT(Y SPEC.)TO M60508



(A)=VIO30-6B P(KR)
(B)=
(C)=
(D)=
(E)=
(F)=

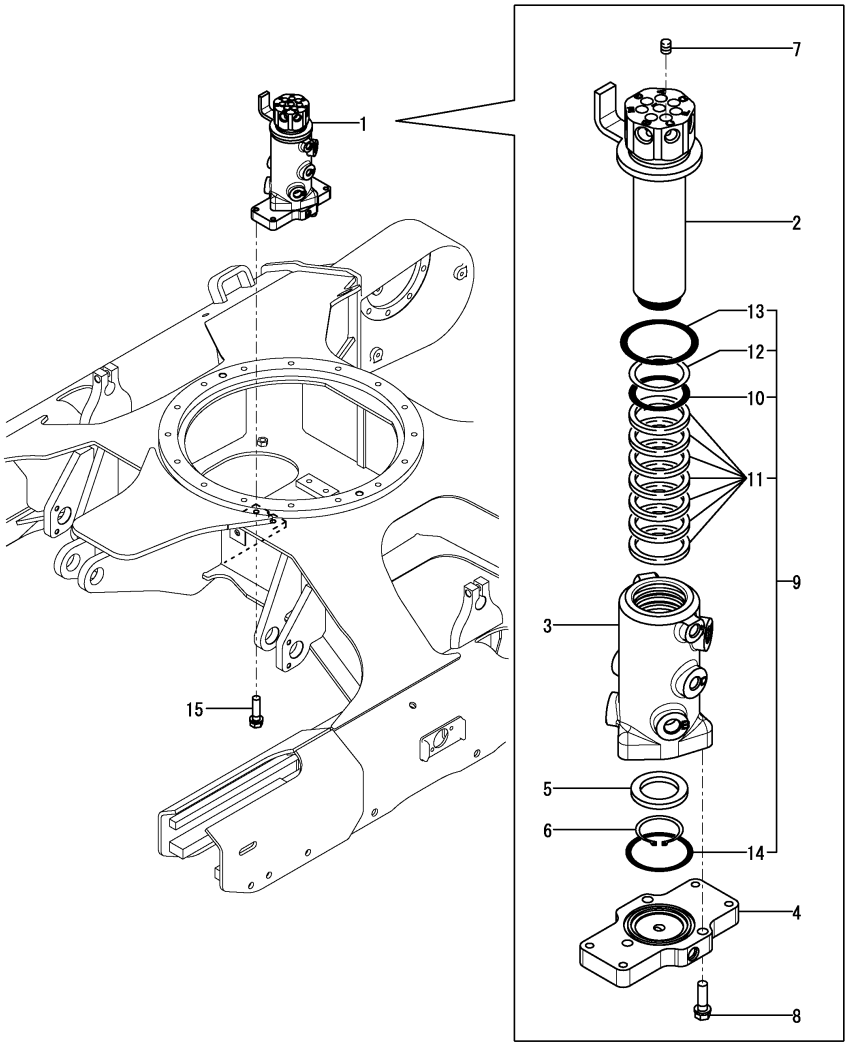


| No. | Lev. | Parts No. | Description | Q'ty (A) | (B) | (C) | (D) | (E) | (F) | I | R |
|---|---|---|---|---|---|---|---|---|---|---|---|
| 1 | 1 (A=M60509) | 172B03-73800 | JOINT ASSY, SWIVEL | 1 | | | | | | Z | 1 |
| 2 | 2 | 172B03-73810 | SHAFT ASSY, SWIVEL | 1 | | | | | | | |
| 3 | 2 | 172444-73831 | HUB, SWIVEL | 1 | | | | | | | |
| 4 | 2 | 172444-73840 | FLANGE, SWIVEL | 1 | | | | | | | |
| 5 | 2 | 172137-73860 | SPACER, SWIVEL | 1 | | | | | | | |
| 6 | 2 | 22242-000451 | RING, 45 | 1 | | | | | | | |
| 7 | 2 | 23871-020000 | PLUG, R02 | 7 | | | | | | | |
| 8 | 2 | 26013-100352 | BOLT, M10X 35 | 3 | | | | | | | |
| 9 | 2 | 172444-73880 | SEAL SET, SWIVEL | 1 | | | | | | | |
| 10 | 3 | 172142-73800 | O-RING, 55.76X5.7 | 1 | | | | | | | |
| 11 | 3 | 172447-73840 | SEAL, STN-55 | 7 | | | | | | | |
| 12 | 3 | 172148-73870 | RING, BUCK UP EL | 1 | | | | | | | |
| 13 | 3 | 24311-000750 | O-RING, 1AP75.0 | 1 | | | | | | | |
| 14 | 3 | 24321-000700 | O-RING, 1AG70.0 | 1 | | | | | | | |
| 15 | 1 | 26013-100402 | BOLT, M10X 40 | 4 | | | | | | | |

Remarks
(1)Compatibility by assembly exchang
with parts of Fig.116(75A) Ref.No.1.

N:Old Yes/No New, Q:Old No/Yes New, R:Old Yes/Yes New, S:Old No/No New, W:Add, Z:Discontinued, F:Interchangeable by set, K:Q'ty Change

Copyright (C) YANMAR GLOBAL CS CO., LTD. All RightsReserved.

# Fig.116. (75A)SWIVEL JOINT(N SPEC.)(FROM M60509)

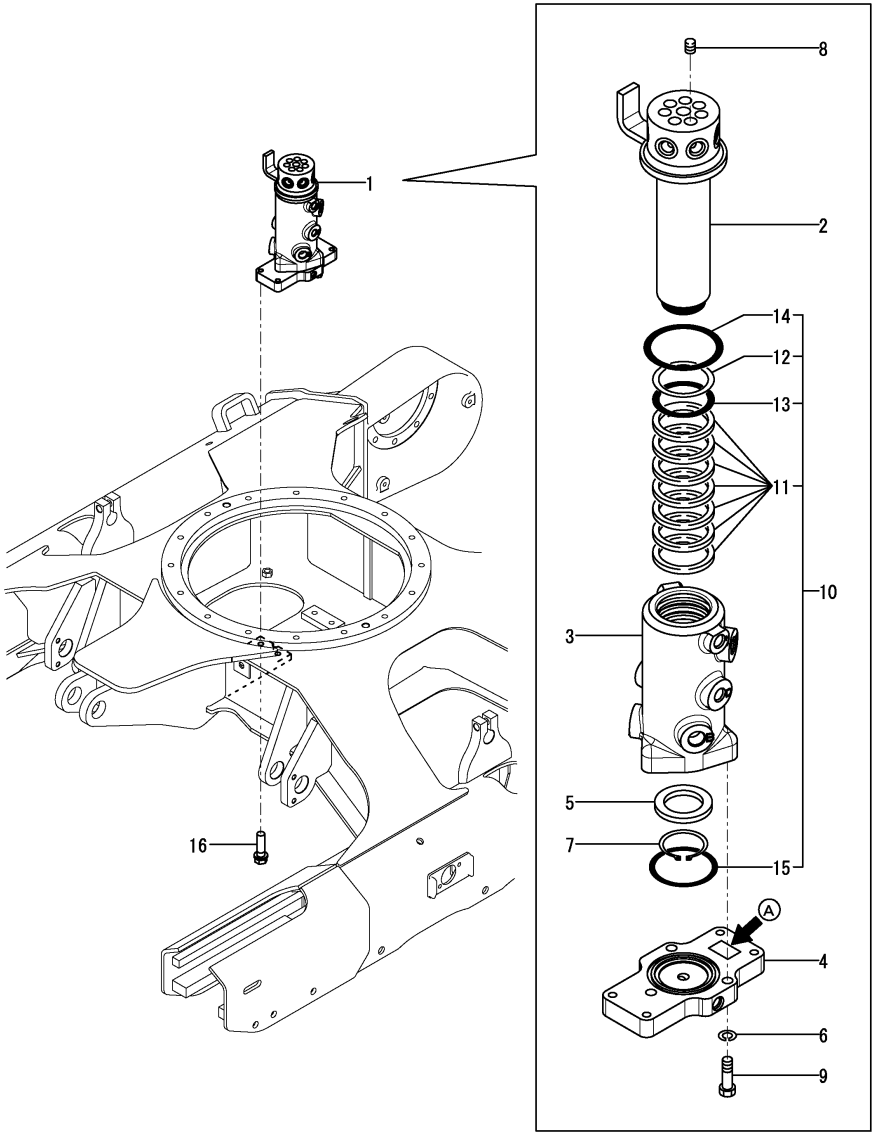


(A)=VIO30-6B P(KR)
(B)=
(C)=
(D)=
(E)=
(F)=

| No. | Lev. | Parts No. | Description | Q'ty (A) | (B) | (C) | (D) | (E) | (F) | I | R |
|---|---|---|---|---|---|---|---|---|---|---|---|
| 1 | 1 | 172B02-73800 | JOINT ASSY, SWIVEL | 1 | | | | | | W | 1 |
| | (A=M60509) | | | | | | | | | | |
| 2 | 2 | 172B02-73810 | SHAFT ASSY, SWIVEL | 1 | | | | | | | |
| 3 | 2 | 172B02-73840 | HUB, SWIVEL | 1 | | | | | | | |
| 4 | 2 | 172B02-73850 | FLANGE, SWIVEL | 1 | | | | | | | |
| 5 | 2 | 172B02-73860 | SPACER, SWIVEL | 1 | | | | | | | |
| 6 | 2 | 22217-100000 | WASHER, SPRING 10 | 3 | | | | | | | |
| 7 | 2 | 22242-000451 | RING, 45 | 1 | | | | | | | |
| 8 | 2 | 23871-020000 | PLUG, R02 | 7 | | | | | | | |
| 9 | 2 | 26076-100352 | BOLT, 10.910X 35 | 3 | | | | | | | |
| 10 | 2 | 172B02-73900 | SEAL KIT, SWIVEL | 1 | | | | | | | |
| 10-1 | 2 | 172B02-73910 | SEAL KIT, SWIVEL | 1 | | | | | | N | |
| | (A=*2014.04) | | | | | | | | | | |
| 11 | 3 | 172B02-73870 | SEAL, SWIVEL | 7 | | | | | | | |
| 11-1 | 3 | 172B02-73890 | SEAL, SWIVEL | 7 | | | | | | N | |
| | (A=*2014.04) | | | | | | | | | | |
| 12 | 3 | 172B02-73880 | RING, BACK UP T3 55 | 1 | | | | | | | |
| 13 | 3 | 24315-000560 | O-RING, 1BP56.0 | 1 | | | | | | | |
| 14 | 3 | 24315-000750 | O-RING, 1BP75.0 | 1 | | | | | | | |
| 15 | 3 | 24325-000700 | O-RING, 1BG70.0 | 1 | | | | | | | |
| 16 | 1 | 26013-100402 | BOLT, M10X 40 | 4 | | | | | | | |

Remarks
(1)A:'NACHI'LABEL

N:Old $\overset{\text{Yes}}{\underset{\text{No}}{\leftrightarrows}}$ New, Q:Old $\overset{\text{No}}{\underset{\text{Yes}}{\leftrightarrows}}$ New, R:Old $\overset{\text{Yes}}{\underset{\text{Yes}}{\leftrightarrows}}$ New, S:Old $\overset{\text{No}}{\underset{\text{No}}{\leftrightarrows}}$ New, W:Add, Z:Discontinued, F:Interchangeable by set, K:Q'ty Change

Copyright (C) YANMAR GLOBAL CS CO., LTD. All RightsReserved.

# Fig.76. CONTROL VALVE(1/7)(TO M60543)



(A)=VIO30-6B P(KR)
(B)=
(C)=
(D)=
(E)=
(F)=

| No. | Lev. | Parts No. | Description | Q'ty (A) | (B) | (C) | (D) | (E) | (F) | I | R |
|---|---|---|---|---|---|---|---|---|---|---|---|
| 1 | 1 | 172B02-74110 | VALVE ASSY, CV JP | 1 | | | | | | | |
| 2 | 1 | 26013-100162 | BOLT, M10X 16 | 3 | | | | | | | |

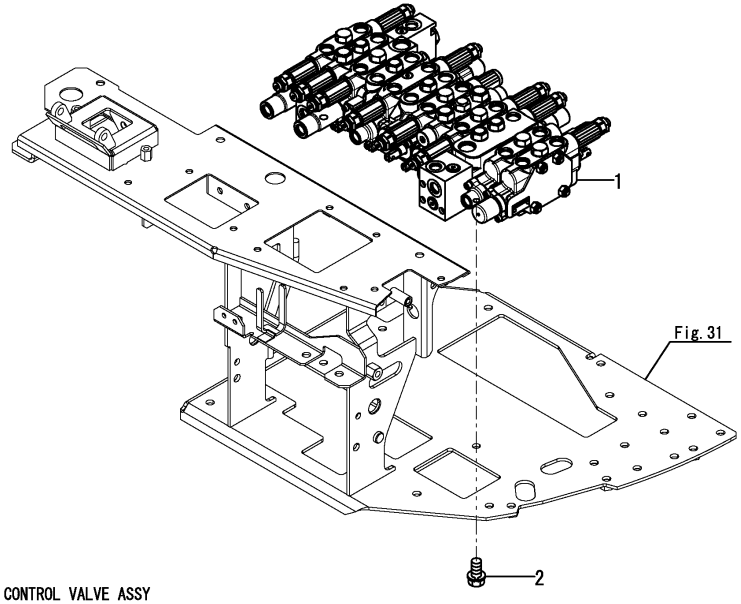


CONTROL VALVE ASSY
Fig. 76 Ref. No. 1.
INC. Fig. 77～82.

CONTROL VALVE

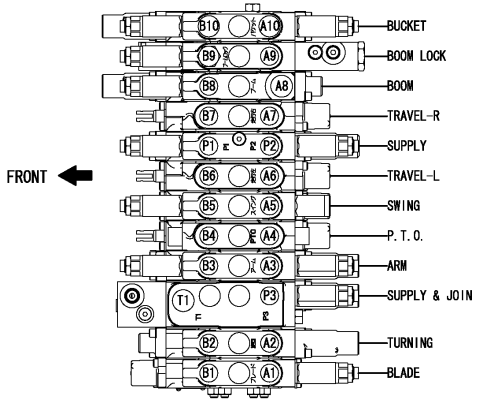


N:Old $\overset{\text{Yes}}{\underset{\text{No}}{\rightleftarrows}}$ New, Q:Old $\overset{\text{No}}{\underset{\text{Yes}}{\rightleftarrows}}$ New, R:Old $\overset{\text{Yes}}{\underset{\text{Yes}}{\rightleftarrows}}$ New, S:Old $\overset{\text{No}}{\underset{\text{No}}{\rightleftarrows}}$ New, W:Add, Z:Discontinued, F:Interchangeable by set, K:Q'ty Change

Copyright (C) YANMAR GLOBAL CS CO., LTD. All RightsReserved.

# Fig.77. CONTROL VALVE(2/7)(TO M60543)



(A)=VIO30-6B P(KR)
(B)=
(C)=
(D)=
(E)=
(F)=

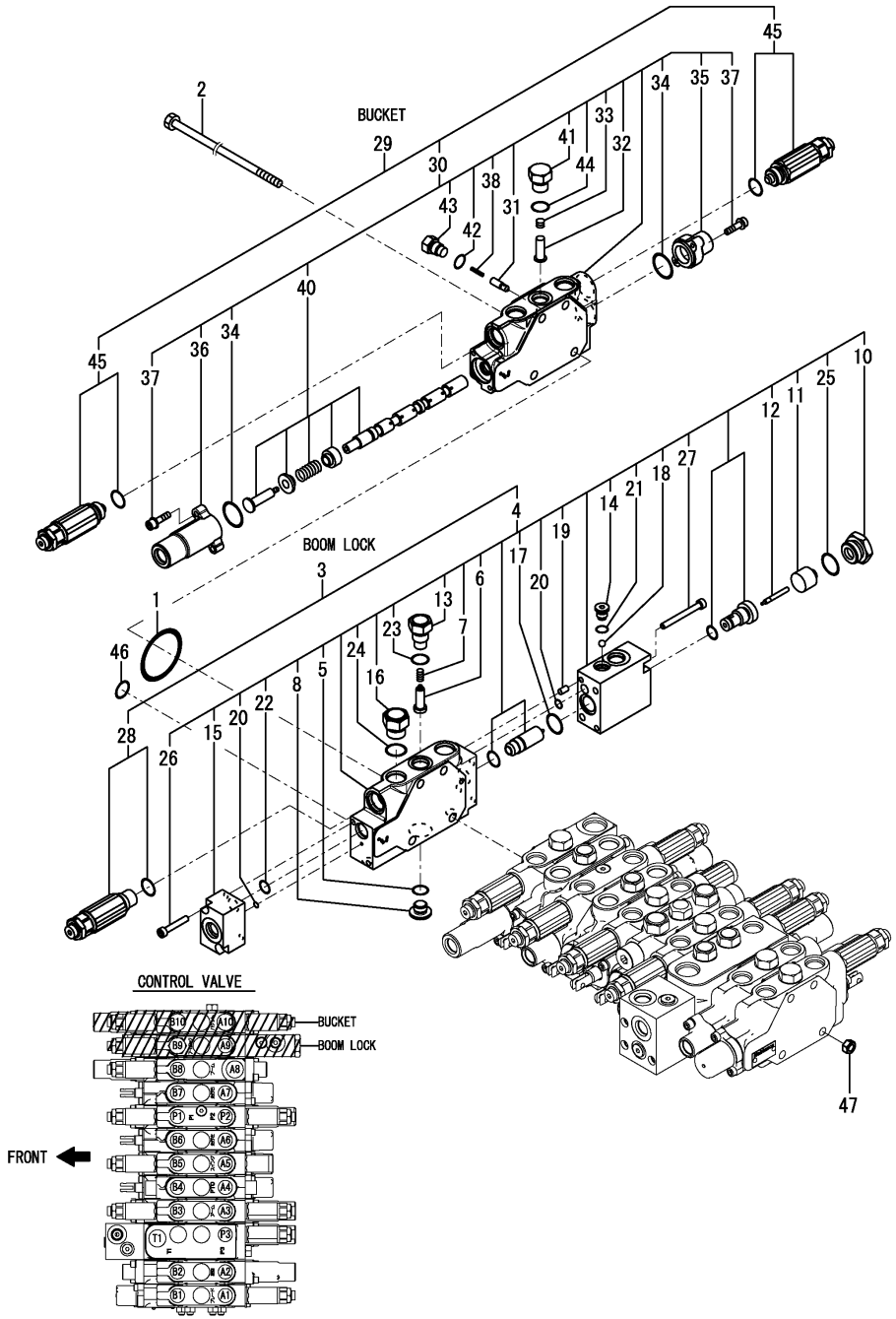


| No. | Lev. | Parts No. | Description | Q'ty (A) | (B) | (C) | (D) | (E) | (F) | I | R |
|---|---|---|---|---|---|---|---|---|---|---|---|
| 1 | 2 | 172458-74720 | O-RING, 1BW G4 | 11 | | | | | | | |
| 2 | 2 | 172458-74730 | BOLT, L380 | 4 | | | | | | | |
| 3 | 2 | 172B02-74890 | VALVE ASSY, LOCK | 1 | | | | | | | |
| 4 | 3 | 172B02-74450 | SECTION ASSY, LOCK | 1 | | | | | | | |
| 5 | 4 | 172A47-74270 | O-RING, 1B S16 | 1 | | | | | | | |
| 6 | 4 | 172458-74290 | VALVE, REVERSE | 1 | | | | | | | |
| 7 | 4 | 172458-74360 | SPRING, CHECK VALVE | 1 | | | | | | | |
| 8 | 4 | 172A47-74460 | PLUG, M12X1.25 | 1 | | | | | | | |
| 10 | 4 | 172A47-74560 | BUSH, PF1/2X1/4 | 1 | | | | | | | |
| 11 | 4 | 172A47-74570 | PISTON, B | 1 | | | | | | | |
| 12 | 4 | 172A47-74580 | PISTON, A1 | 1 | | | | | | | |
| 13 | 4 | 172458-74640 | STAY, CHECK VALVE | 1 | | | | | | | |
| 14 | 4 | 172A47-74920 | HOLDER, BALL | 1 | | | | | | | |
| 15 | 4 | 172A47-74930 | BODY, DISCHARGE | 1 | | | | | | | |
| 16 | 4 | 172A47-75620 | STAY, CHECK VALVE | 1 | | | | | | | |
| 17 | 4 | 172A47-75680 | O-RING, AS 1B17 | 1 | | | | | | | |
| 18 | 4 | 172A47-75690 | BALL, STEEL 7MM | 1 | | | | | | | |
| 19 | 4 | 22312-050100 | PIN, PARALLEL M5X10 | 2 | | | | | | | |
| 20 | 4 | 24311-000060 | O-RING, 1AP6.0 | 2 | | | | | | | |
| 21 | 4 | 24315-000080 | O-RING, 1BP8.0 | 1 | | | | | | | |
| 22 | 4 | 24315-000100 | O-RING, 1BP10.0 | 1 | | | | | | | |
| 23 | 4 | 24315-000110 | O-RING, 1BP11.0 | 1 | | | | | | | |
| 24 | 4 | 24315-000140 | O-RING, 1BP14.0 | 1 | | | | | | | |
| 25 | 4 | 24315-000180 | O-RING, 1BP18.0 | 1 | | | | | | | |
| 26 | 4 | 26450-050302 | BOLT, M5X 30 | 2 | | | | | | | |
| 27 | 4 | 26450-060652 | BOLT, M6X 65 | 2 | | | | | | | |
| 28 | 3 | 172B02-74760 | RELIEF ASSY,ORV 29.4 | 1 | | | | | | | |
| 28-1 | 3 (A=*2013.10) | 172456-74440 | VALVE, RELIEF 300/5 | 1 | | | | | | | R |
| 29 | 2 | 172B02-74900 | VALVE ASSY, BUCKET | 1 | | | | | | | |
| 30 | 3 | 172B02-74470 | SECTION ASSY, BUCKET | 1 | | | | | | | |
| 31 | 4 | 172499-70180 | VALVE ASSY, REVERSE | 1 | | | | | | | |
| 32 | 4 | 172458-74150 | VALVE, REVERSE | 1 | | | | | | | |
| 33 | 4 | 172458-74160 | SPRING, CHECK VALVE | 1 | | | | | | | |
| 34 | 4 | 172458-74230 | O-RING, 1B S22 | 2 | | | | | | | |
| 35 | 4 | 172458-74240 | COVER, PILOT B1 | 1 | | | | | | | |
| 36 | 4 | 172458-74250 | COVER, PILOT A1 | 1 | | | | | | | |
| 37 | 4 | 172458-74260 | BOLT, HEXAGON 5X20 | 4 | | | | | | | |
| 38 | 4 | 172173-74280 | SPRING, CHECK | 1 | | | | | | | |
| 40 | 4 | 172B02-74490 | SPOOL ASSY, BUCKET | 1 | | | | | | | |
| 41 | 4 | 172458-74630 | STAY, CHECK VALVE | 1 | | | | | | | |
| 42 | 4 | 172A47-74950 | O-RING, AS568-904 | 1 | | | | | | | |
| 43 | 4 | 172A47-74970 | STAY, CHECK VALVE | 1 | | | | | | | |
| 44 | 4 | 24315-000110 | O-RING, 1BP11.0 | 1 | | | | | | | |
| 45 | 3 | 172B02-74750 | RELIEF ASSY,ORV 25.5 | 2 | | | | | | | |
| 46 | 2 | 24311-000200 | O-RING, 1AP20.0 | 11 | | | | | | | |
| 47 | 2 | 26716-080002 | NUT, M8 | 4 | | | | | | | |

N:Old ⇔(Yes/No) New, Q:Old ⇔(No/Yes) New, R:Old ⇔(Yes/Yes) New, S:Old ⇔(No/No) New, W:Add, Z:Discontinued, F:Interchangeable by set, K:Q'ty Change

Copyright (C) YANMAR GLOBAL CS CO., LTD. All RightsReserved.

# Fig.78. CONTROL VALVE(3/7)(TO M60543)



(A)=VIO30-6B P(KR)
(B)=
(C)=
(D)=
(E)=
(F)=

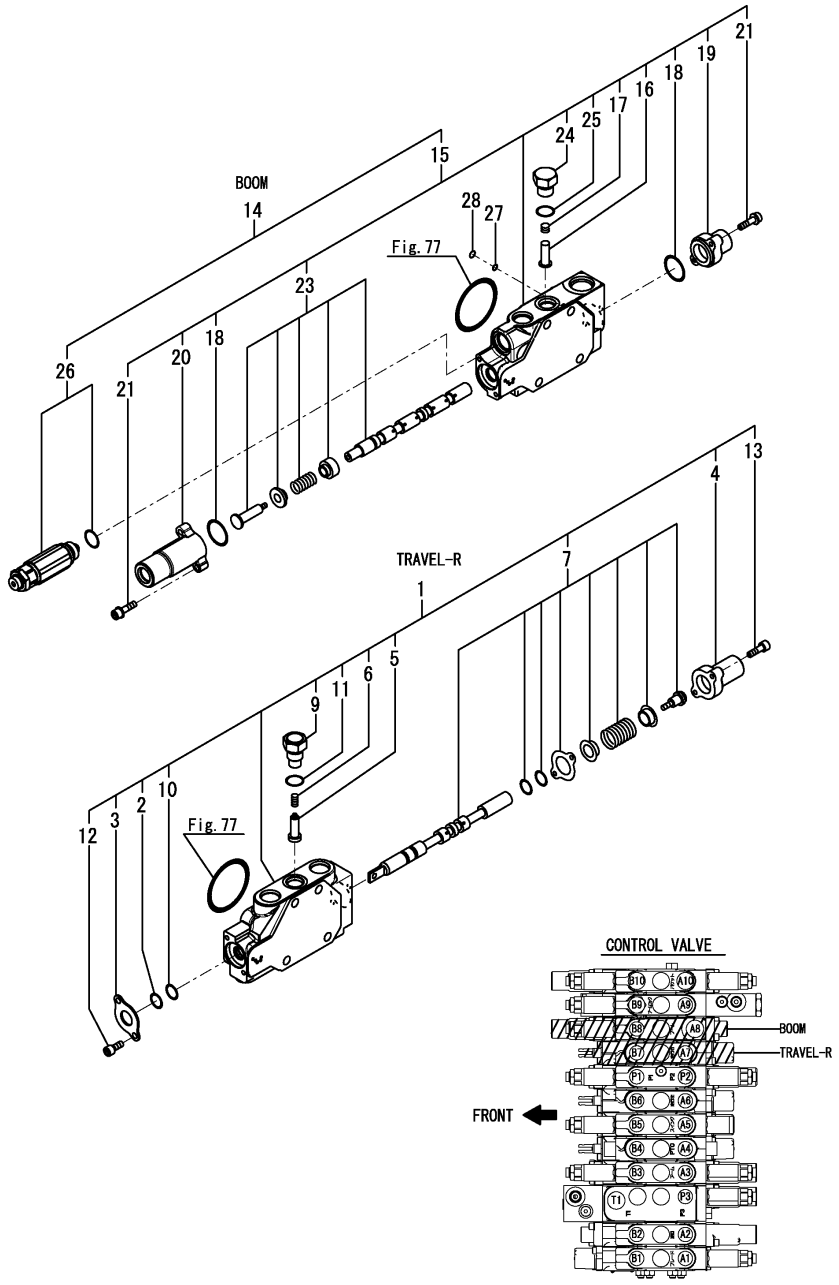


| No. | Lev. | Parts No. | Description | Q'ty (A) | (B) | (C) | (D) | (E) | (F) | I | R |
|---|---|---|---|---|---|---|---|---|---|---|---|
| 1 | 2 | 172B02-74400 | SECTION ASSY,TRAVEL2 | 1 | | | | | | | |
| 2 | 3 | 172458-74130 | WIPER, DUST | 1 | | | | | | | |
| 3 | 3 | 172458-74140 | RETAINER, SEAL | 1 | | | | | | | |
| 4 | 3 | 172458-74170 | CAP, SPRING | 1 | | | | | | | |
| 5 | 3 | 172458-74290 | VALVE, REVERSE | 1 | | | | | | | |
| 6 | 3 | 172458-74360 | SPRING, CHECK VALVE | 1 | | | | | | | |
| 7 | 3 | 172B02-74370 | SPOOL ASSY, TRAVEL | 1 | | | | | | | |
| 9 | 3 | 172458-74640 | STAY, CHECK VALVE | 1 | | | | | | | |
| 10 | 3 | 24311-000120 | O-RING, 1AP12.0 | 1 | | | | | | | |
| 11 | 3 | 24315-000110 | O-RING, 1BP11.0 | 1 | | | | | | | |
| 12 | 3 | 26450-050102 | BOLT, M5X 10 | 2 | | | | | | | |
| 13 | 3 | 26450-050182 | BOLT, M5X 18 | 2 | | | | | | | |
| 14 | 2 | 172B02-74880 | VALVE ASSY, BOOM | 1 | | | | | | | |
| 15 | 3 | 172B02-74420 | SECTION ASSY, BOOM | 1 | | | | | | | |
| 16 | 4 | 172458-74150 | VALVE, REVERSE | 1 | | | | | | | |
| 17 | 4 | 172458-74160 | SPRING, CHECK VALVE | 1 | | | | | | | |
| 18 | 4 | 172458-74230 | O-RING, 1B S22 | 2 | | | | | | | |
| 19 | 4 | 172458-74240 | COVER, PILOT B1 | 1 | | | | | | | |
| 20 | 4 | 172458-74250 | COVER, PILOT A1 | 1 | | | | | | | |
| 21 | 4 | 172458-74260 | BOLT, HEXAGON 5X20 | 4 | | | | | | | |
| 23 | 4 | 172B02-74440 | SPOOL ASSY, BOOM | 1 | | | | | | | |
| 24 | 4 | 172458-74630 | STAY, CHECK VALVE | 1 | | | | | | | |
| 25 | 4 | 24315-000110 | O-RING, 1BP11.0 | 1 | | | | | | | |
| 26 | 3 | 172B02-74740 | RELIEF ASSY,ORV 23.5 | 1 | | | | | | | |
| 27 | 2 | 24315-000090 | O-RING, 1BP9.0 | 1 | | | | | | | |
| 28 | 2 | 24315-000100 | O-RING, 1BP10.0 | 1 | | | | | | | |

N:Old $\overset{\text{Yes}}{\underset{\text{No}}{\rightleftarrows}}$ New, Q:Old $\overset{\text{No}}{\underset{\text{Yes}}{\rightleftarrows}}$ New, R:Old $\overset{\text{Yes}}{\underset{\text{Yes}}{\rightleftarrows}}$ New, S:Old $\overset{\text{No}}{\underset{\text{No}}{\rightleftarrows}}$ New, W:Add, Z:Discontinued, F:Interchangeable by set, K:Q'ty Change

Copyright (C) YANMAR GLOBAL CS CO., LTD. All RightsReserved.

# Fig.79. CONTROL VALVE(4/7)(TO M60543)



(A)=VIO30-6B P(KR)
(B)=
(C)=
(D)=
(E)=
(F)=

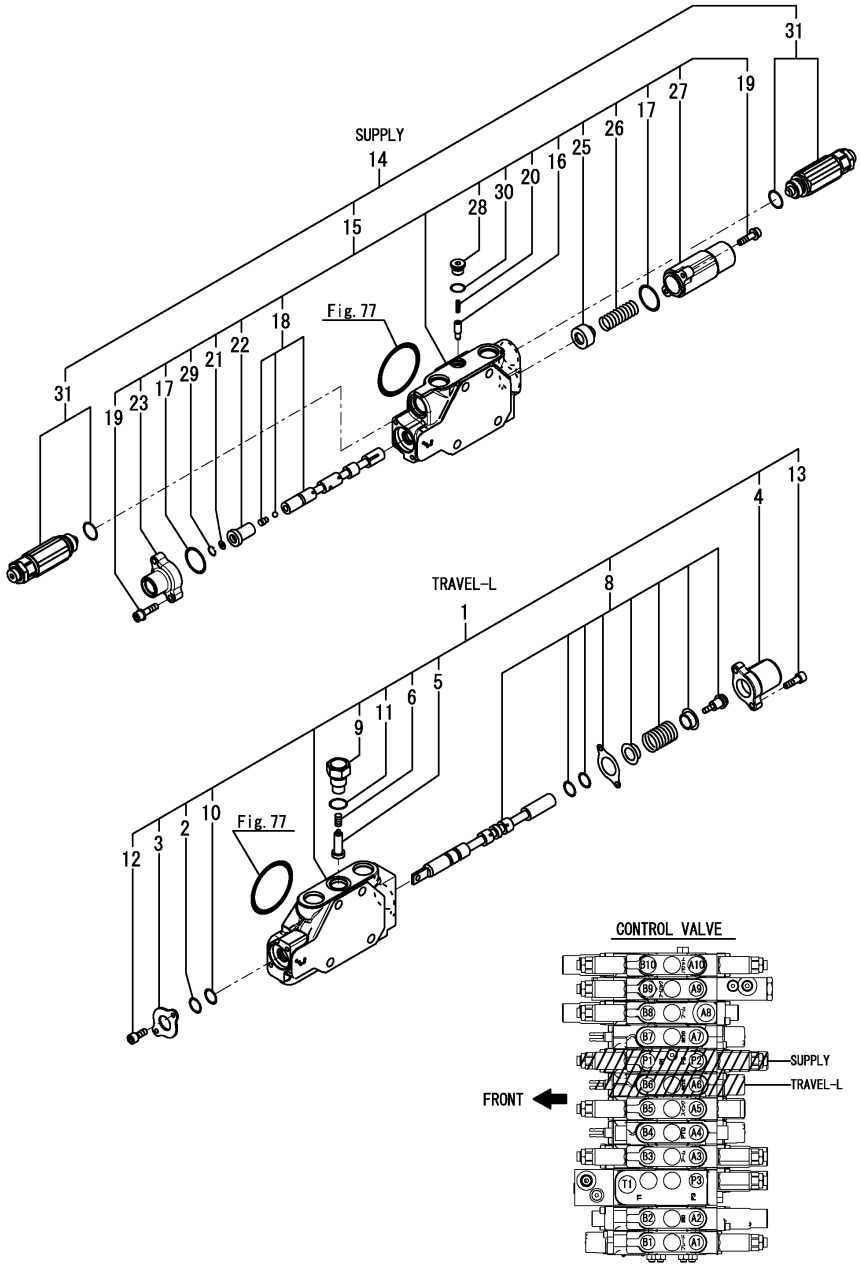


| No. | Lev. | Parts No. | Description | Q'ty (A) | (B) | (C) | (D) | (E) | (F) | I | R |
|---|---|---|---|---|---|---|---|---|---|---|---|
| 1 | 2 | 172B02-74350 | SECTION ASSY,TRAVEL1 | 1 | | | | | | | |
| 2 | 3 | 172458-74130 | WIPER, DUST | 1 | | | | | | | |
| 3 | 3 | 172458-74140 | RETAINER, SEAL | 1 | | | | | | | |
| 4 | 3 | 172458-74170 | CAP, SPRING | 1 | | | | | | | |
| 5 | 3 | 172458-74290 | VALVE, REVERSE | 1 | | | | | | | |
| 6 | 3 | 172458-74360 | SPRING, CHECK VALVE | 1 | | | | | | | |
| 8 | 3 | 172B02-74370 | SPOOL ASSY, TRAVEL | 1 | | | | | | | |
| 9 | 3 | 172458-74640 | STAY, CHECK VALVE | 1 | | | | | | | |
| 10 | 3 | 24311-000120 | O-RING, 1AP12.0 | 1 | | | | | | | |
| 11 | 3 | 24315-000110 | O-RING, 1BP11.0 | 1 | | | | | | | |
| 12 | 3 | 26450-050102 | BOLT, M5X 10 | 2 | | | | | | | |
| 13 | 3 | 26450-050182 | BOLT, M5X 18 | 2 | | | | | | | |
| 14 | 2 | 172B02-74870 | VALVE ASSY, INLET | 1 | | | | | | | |
| 15 | 3 | 172B02-74380 | SECTION ASSY, INLET | 1 | | | | | | | |
| 16 | 4 | 172499-70180 | VALVE ASSY, REVERSE | 1 | | | | | | | |
| 17 | 4 | 172458-74230 | O-RING, 1B S22 | 2 | | | | | | | |
| 18 | 4 | 172A46-74250 | SPOOL ASSY, INLET | 1 | | | | | | | |
| 19 | 4 | 172458-74260 | BOLT, HEXAGON 5X20 | 4 | | | | | | | |
| 20 | 4 | 172173-74280 | SPRING, CHECK | 1 | | | | | | | |
| 21 | 4 | 172A47-74360 | FILTER | 1 | | | | | | | |
| 22 | 4 | 172A47-74370 | PISTON | 1 | | | | | | | |
| 23 | 4 | 172A47-74380 | COVER, PILOT B5 | 1 | | | | | | | |
| 25 | 4 | 172458-74530 | SEAT, SPRING | 1 | | | | | | | |
| 26 | 4 | 172458-74540 | SPRING, RETURN | 1 | | | | | | | |
| 27 | 4 | 172458-74550 | COVER, PILOT A2 | 1 | | | | | | | |
| 28 | 4 | 172458-74670 | PLUG, PF1/8 | 1 | | | | | | | |
| 29 | 4 | 172A47-74980 | CIRCLIP | 1 | | | | | | | |
| 30 | 4 | 24315-000080 | O-RING, 1BP8.0 | 1 | | | | | | | |
| 31 | 3 | 172B02-74710 | RELIEF ASSY, 20.6 | 2 | | | | | | | |

N:Old $\overset{\text{Yes}}{\underset{\text{No}}{\rightleftarrows}}$ New, Q:Old $\overset{\text{No}}{\underset{\text{Yes}}{\rightleftarrows}}$ New, R:Old $\overset{\text{Yes}}{\underset{\text{Yes}}{\rightleftarrows}}$ New, S:Old $\overset{\text{No}}{\underset{\text{No}}{\rightleftarrows}}$ New, W:Add, Z:Discontinued, F:Interchangeable by set, K:Q'ty Change

Copyright (C) YANMAR GLOBAL CS CO., LTD. All RightsReserved.

# Fig.80. CONTROL VALVE(5/7)(TO M60543)



(A)=VIO30-6B P(KR)
(B)=
(C)=
(D)=
(E)=
(F)=

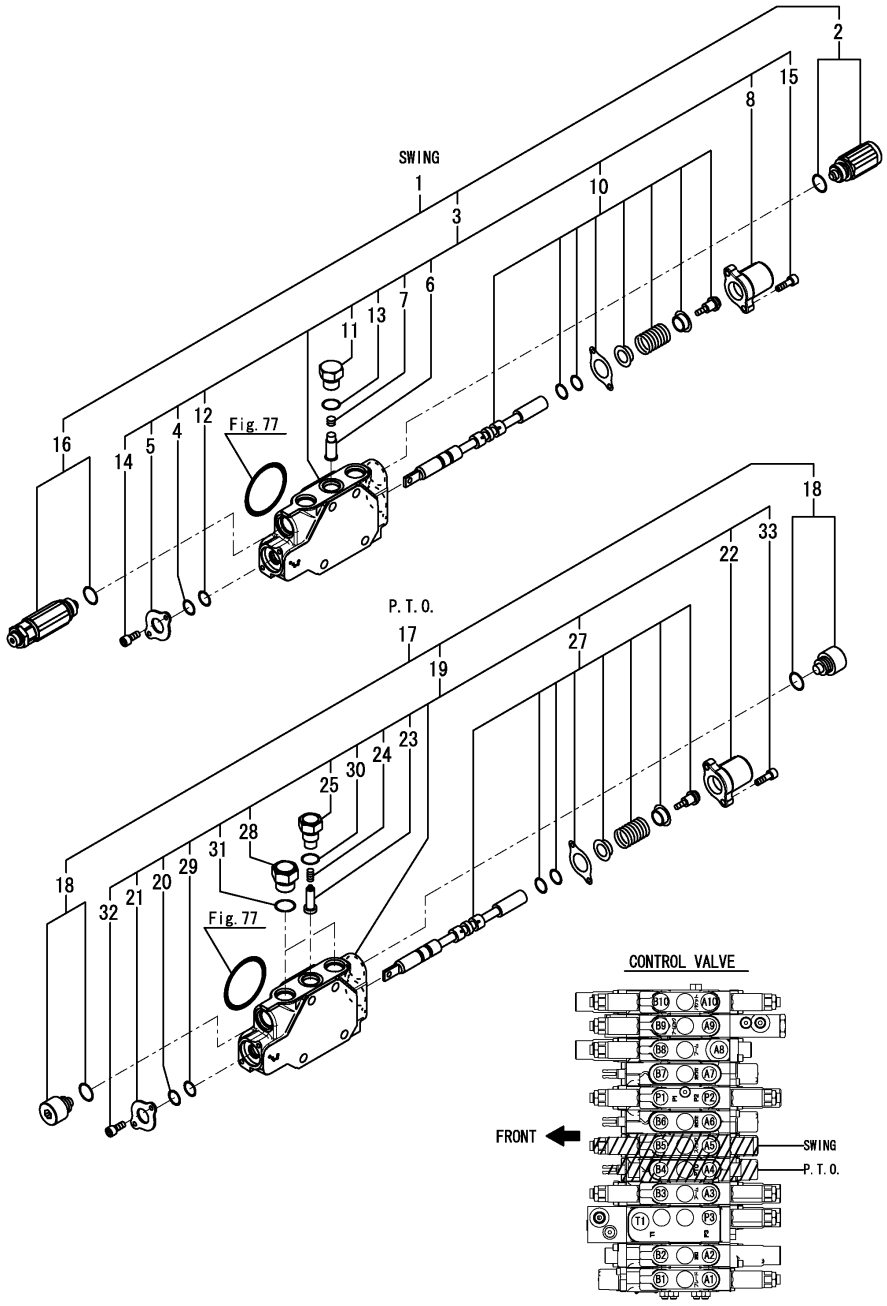


| No. | Lev. | Parts No. | Description | Q'ty (A) | (B) | (C) | (D) | (E) | (F) | I | R |
|---|---|---|---|---|---|---|---|---|---|---|---|
| 1 | 2 | 172B02-74860 | VALVE ASSY, SWING | 1 | | | | | | | |
| 2 | 3 | 172447-74230 | ANTI-CAVITATION ASSY | 1 | | | | | | | |
| 3 | 3 | 172B02-74320 | SECTION ASSY, SWING | 1 | | | | | | | |
| 4 | 4 | 172458-74130 | WIPER, DUST | 1 | | | | | | | |
| 5 | 4 | 172458-74140 | RETAINER, SEAL | 1 | | | | | | | |
| 6 | 4 | 172458-74150 | VALVE, REVERSE | 1 | | | | | | | |
| 7 | 4 | 172458-74160 | SPRING, CHECK VALVE | 1 | | | | | | | |
| 8 | 4 | 172458-74170 | CAP, SPRING | 1 | | | | | | | |
| 10 | 4 | 172B02-74340 | SPOOL ASSY, SWING | 1 | | | | | | | |
| 11 | 4 | 172458-74630 | STAY, CHECK VALVE | 1 | | | | | | | |
| 12 | 4 | 24311-000120 | O-RING, 1AP12.0 | 1 | | | | | | | |
| 13 | 4 | 24315-000110 | O-RING, 1BP11.0 | 1 | | | | | | | |
| 14 | 4 | 26450-050102 | BOLT, M5X 10 | 2 | | | | | | | |
| 15 | 4 | 26450-050182 | BOLT, M5X 18 | 2 | | | | | | | |
| 16 | 3 | 172B02-74750 | RELIEF ASSY,ORV 25.5 | 1 | | | | | | | |
| 17 | 2 | 172B02-74910 | VALVE ASSY, PTO M | 1 | | | | | | | |
| 18 | 3 | 172456-74290 | PLUG, RELIEF VALVE | 2 | | | | | | | |
| 18-1 | 3 | 172A47-75460 | PLUG ASSY, VALVE | 2 | | | | | | | R |
| | (A=*2013.10) | | | | | | | | | | |
| 19 | 3 | 172B02-74500 | SECTION ASSY, PTO M | 1 | | | | | | | |
| 20 | 4 | 172458-74130 | WIPER, DUST | 1 | | | | | | | |
| 21 | 4 | 172458-74140 | RETAINER, SEAL | 1 | | | | | | | |
| 22 | 4 | 172458-74170 | CAP, SPRING | 1 | | | | | | | |
| 23 | 4 | 172490-74310 | VALVE, REVERSE | 1 | | | | | | | |
| 24 | 4 | 172490-74320 | SPRING, CHECK VALVE | 1 | | | | | | | |
| 25 | 4 | 172490-74330 | STAY, CHECK VALVE | 1 | | | | | | | |
| 27 | 4 | 172B02-74520 | SPOOL ASSY, PTO M | 1 | | | | | | | |
| 28 | 4 | 172A47-75620 | STAY, CHECK VALVE | 2 | | | | | | | |
| 29 | 4 | 24311-000120 | O-RING, 1AP12.0 | 1 | | | | | | | |
| 30 | 4 | 24315-000110 | O-RING, 1BP11.0 | 1 | | | | | | | |
| 31 | 4 | 24315-000140 | O-RING, 1BP14.0 | 2 | | | | | | | |
| 32 | 4 | 26450-050102 | BOLT, M5X 10 | 2 | | | | | | | |
| 33 | 4 | 26450-050182 | BOLT, M5X 18 | 2 | | | | | | | |

N:Old $\overset{\text{Yes}}{\underset{\text{No}}{\leftrightarrows}}$ New, Q:Old $\overset{\text{No}}{\underset{\text{Yes}}{\leftrightarrows}}$ New, R:Old $\overset{\text{Yes}}{\underset{\text{Yes}}{\leftrightarrows}}$ New, S:Old $\overset{\text{No}}{\underset{\text{No}}{\leftrightarrows}}$ New, W:Add, Z:Discontinued, F:Interchangeable by set, K:Q'ty Change

Copyright (C) YANMAR GLOBAL CS CO., LTD. All RightsReserved.

# Fig.81. CONTROL VALVE(6/7)(TO M60543)



(A)=VIO30-6B P(KR)
(B)=
(C)=
(D)=
(E)=
(F)=

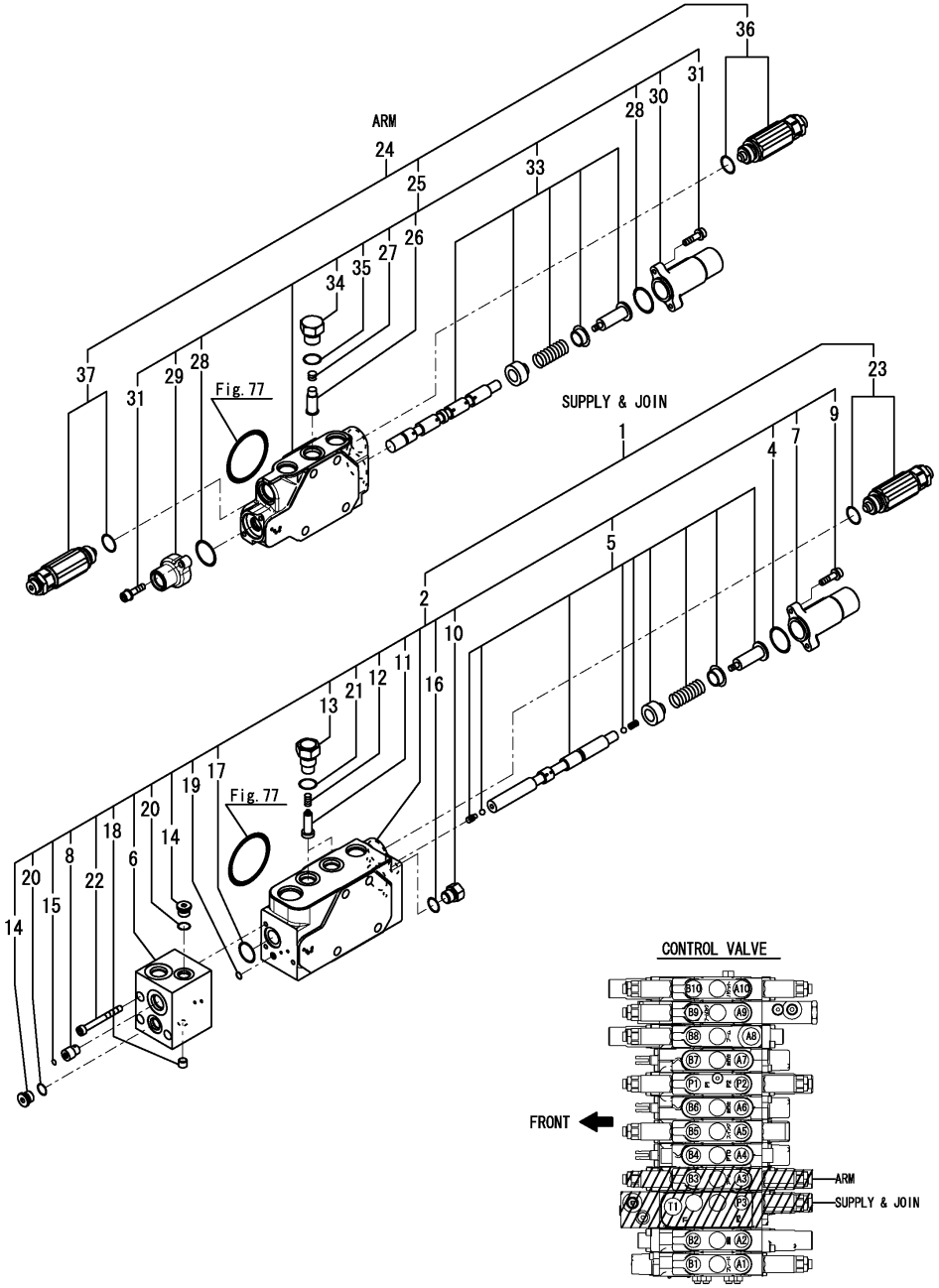


| No. | Lev. | Parts No. | Description | Q'ty (A) | (B) | (C) | (D) | (E) | (F) | I | R |
|---|---|---|---|---|---|---|---|---|---|---|---|
| 1 | 2 | 172B02-74830 | VALVE ASSY, CONFLUX | 1 | | | | | | | |
| 2 | 3 | 172B02-74210 | SECTION ASSY,CONFLUX | 1 | | | | | | | |
| 4 | 4 | 172458-74230 | O-RING, 1B S22 | 1 | | | | | | | |
| 5 | 4 | 172B02-74230 | SPOOL ASSY, CONFLUX | 1 | | | | | | | |
| 6 | 4 | 172B02-74240 | BLOCK, PILOT | 1 | | | | | | | |
| 7 | 4 | 172458-74250 | COVER, PILOT A1 | 1 | | | | | | | |
| 8 | 4 | 172B02-74250 | PLUG, THROTTLE | 1 | | | | | | | |
| 9 | 4 | 172458-74260 | BOLT, HEXAGON 5X20 | 2 | | | | | | | |
| 10 | 4 | 172A47-74260 | PLUG, SAE1/4 | 1 | | | | | | | |
| 11 | 4 | 172458-74290 | VALVE, REVERSE | 2 | | | | | | | |
| 12 | 4 | 172458-74360 | SPRING, CHECK VALVE | 2 | | | | | | | |
| 13 | 4 | 172458-74640 | STAY, CHECK VALVE | 2 | | | | | | | |
| 14 | 4 | 172458-74670 | PLUG, PF1/8 | 2 | | | | | | | |
| 15 | 4 | 172499-74860 | FILTER, COIN | 1 | | | | | | | |
| 16 | 4 | 172A47-74950 | O-RING, AS568-904 | 1 | | | | | | | |
| 17 | 4 | 172A47-75680 | O-RING, AS 1B17 | 1 | | | | | | | |
| 18 | 4 | 172A47-75720 | PLUG, NPT1/16 | 1 | | | | | | | |
| 19 | 4 | 24315-000050 | O-RING, 1BP5.0 | 2 | | | | | | | |
| 20 | 4 | 24315-000080 | O-RING, 1BP8.0 | 2 | | | | | | | |
| 21 | 4 | 24315-000110 | O-RING, 1BP11.0 | 2 | | | | | | | |
| 22 | 4 | 26450-050502 | BOLT, M5X 50 | 3 | | | | | | | |
| 23 | 3 | 172B02-74720 | RELIEF ASSY, 19.6 | 1 | | | | | | | |
| 24 | 2 | 172B02-74840 | VALVE ASSY, ARM | 1 | | | | | | | |
| 25 | 3 | 172B02-74260 | SECTION ASSY, ARM | 1 | | | | | | | |
| 26 | 4 | 172458-74150 | VALVE, REVERSE | 1 | | | | | | | |
| 27 | 4 | 172458-74160 | SPRING, CHECK VALVE | 1 | | | | | | | |
| 28 | 4 | 172458-74230 | O-RING, 1B S22 | 2 | | | | | | | |
| 29 | 4 | 172458-74240 | COVER, PILOT B1 | 1 | | | | | | | |
| 30 | 4 | 172458-74250 | COVER, PILOT A1 | 1 | | | | | | | |
| 31 | 4 | 172458-74260 | BOLT, HEXAGON 5X20 | 4 | | | | | | | |
| 33 | 4 | 172B02-74280 | SPOOL ASSY, ARM | 1 | | | | | | | |
| 34 | 4 | 172458-74630 | STAY, CHECK VALVE | 1 | | | | | | | |
| 35 | 4 | 24315-000110 | O-RING, 1BP11.0 | 1 | | | | | | | |
| 36 | 3 | 172B02-74740 | RELIEF ASSY,ORV 23.5 | 1 | | | | | | | |
| 37 | 3 | 172B02-74750 | RELIEF ASSY,ORV 25.5 | 1 | | | | | | | |

N:Old $\overset{\text{Yes}}{\underset{\text{No}}{\rightleftarrows}}$ New, Q:Old $\overset{\text{No}}{\underset{\text{Yes}}{\rightleftarrows}}$ New, R:Old $\overset{\text{Yes}}{\underset{\text{Yes}}{\rightleftarrows}}$ New, S:Old $\overset{\text{No}}{\underset{\text{No}}{\rightleftarrows}}$ New, W:Add, Z:Discontinued, F:Interchangeable by set, K:Q'ty Change

Copyright (C) YANMAR GLOBAL CS CO., LTD. All RightsReserved.

# Fig.82. CONTROL VALVE(7/7)(TO M60543)



(A)=VIO30-6B P(KR)
(B)=
(C)=
(D)=
(E)=
(F)=

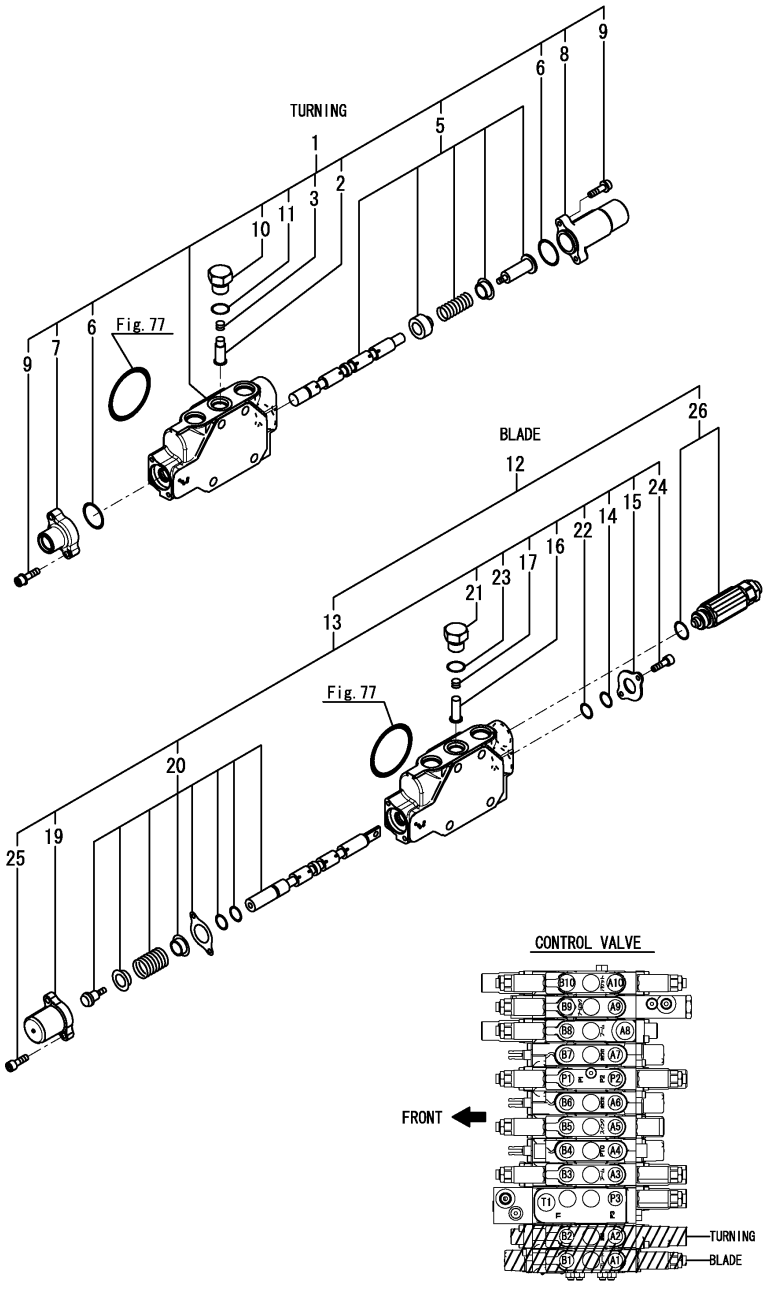


| No. | Lev. | Parts No. | Description | Q'ty (A) | (B) | (C) | (D) | (E) | (F) | I | R |
|---|---|---|---|---|---|---|---|---|---|---|---|
| 1 | 2 | 172B02-74180 | SECTION ASSY, SWING | 1 | | | | | | | |
| 2 | 3 | 172458-74150 | VALVE, REVERSE | 1 | | | | | | | |
| 3 | 3 | 172458-74160 | SPRING, CHECK VALVE | 1 | | | | | | | |
| 5 | 3 | 172B02-74200 | SPOOL ASSY, TURNING | 1 | | | | | | | |
| 6 | 3 | 172458-74230 | O-RING, 1B S22 | 2 | | | | | | | |
| 7 | 3 | 172458-74240 | COVER, PILOT B1 | 1 | | | | | | | |
| 8 | 3 | 172458-74250 | COVER, PILOT A1 | 1 | | | | | | | |
| 9 | 3 | 172458-74260 | BOLT, HEXAGON 5X20 | 4 | | | | | | | |
| 10 | 3 | 172458-74630 | STAY, CHECK VALVE | 1 | | | | | | | |
| 11 | 3 | 24315-000110 | O-RING, 1BP11.0 | 1 | | | | | | | |
| 12 | 2 | 172B02-74820 | VALVE ASSY, BLADE | 1 | | | | | | | |
| 13 | 3 | 172B02-74150 | SECTION ASSY, BLADE | 1 | | | | | | | |
| 14 | 4 | 172458-74130 | WIPER, DUST | 1 | | | | | | | |
| 15 | 4 | 172458-74140 | RETAINER, SEAL | 1 | | | | | | | |
| 16 | 4 | 172458-74150 | VALVE, REVERSE | 1 | | | | | | | |
| 17 | 4 | 172458-74160 | SPRING, CHECK VALVE | 1 | | | | | | | |
| 19 | 4 | 172458-74170 | CAP, SPRING | 1 | | | | | | | |
| 20 | 4 | 172B02-74170 | SPOOL ASSY, BLADE | 1 | | | | | | | |
| 21 | 4 | 172458-74630 | STAY, CHECK VALVE | 1 | | | | | | | |
| 22 | 4 | 24311-000120 | O-RING, 1AP12.0 | 1 | | | | | | | |
| 23 | 4 | 24315-000110 | O-RING, 1BP11.0 | 1 | | | | | | | |
| 24 | 4 | 26450-050102 | BOLT, M5X 10 | 2 | | | | | | | |
| 25 | 4 | 26450-050182 | BOLT, M5X 18 | 2 | | | | | | | |
| 26 | 3 | 172B02-74730 | RELIEF ASSY, ORV 9.8 | 1 | | | | | | | |

N:Old $\overset{\text{Yes}}{\underset{\text{No}}{\leftrightarrows}}$ New, Q:Old $\overset{\text{No}}{\underset{\text{Yes}}{\leftrightarrows}}$ New, R:Old $\overset{\text{Yes}}{\underset{\text{Yes}}{\leftrightarrows}}$ New, S:Old $\overset{\text{No}}{\underset{\text{No}}{\leftrightarrows}}$ New, W:Add, Z:Discontinued, F:Interchangeable by set, K:Q'ty Change

Copyright (C) YANMAR GLOBAL CS CO., LTD. All RightsReserved.

# Fig.124. (82A)CONTROL VALVE(1/7)(P.T.O. HAND OPERATE SPEC.)(FROM M60544)

(A)=VIO30-6B P(KR)
(B)=
(C)=
(D)=
(E)=
(F)=

| No. | Lev. | Parts No. | Description | Q'ty (A) | (B) | (C) | (D) | (E) | (F) | I | R |
|---|---|---|---|---|---|---|---|---|---|---|---|
| 1 | 1 | 172B02-74120 | VALVE ASSY, CV EX | 1 | | | | | | | |
| 2 | 1 | 26013-100162 | BOLT, M10X 16 | 3 | | | | | | | |

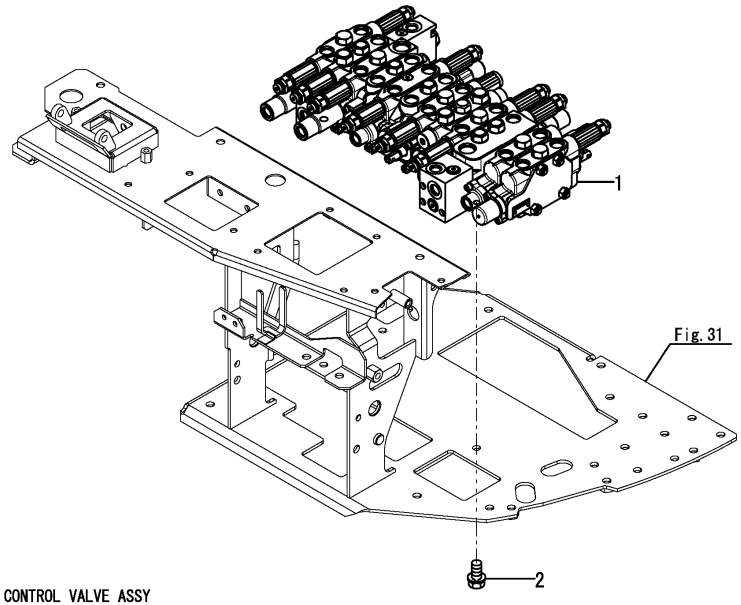


CONTROL VALVE ASSY
Fig. 124(82A) Ref. No. 1.
INC. Fig. 125(82B)～125(82G).

CONTROL VALVE

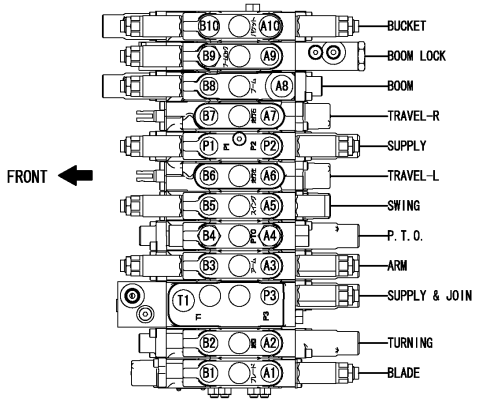


N:Old ⇔ New, Q:Old ⇔ New, R:Old ⇔ New, S:Old ⇔ New, W:Add, Z:Discontinued, F:Interchangeable by set, K:Q'ty Change

Copyright (C) YANMAR GLOBAL CS CO., LTD. All RightsReserved.

# Fig.125. (82B)CONTROL VALVE(2/7)(P.T.O. HAND OPERATE SPEC.)(FROM M60544)

(A)=VIO30-6B P(KR) (D)=
(B)= (E)=
(C)= (F)=

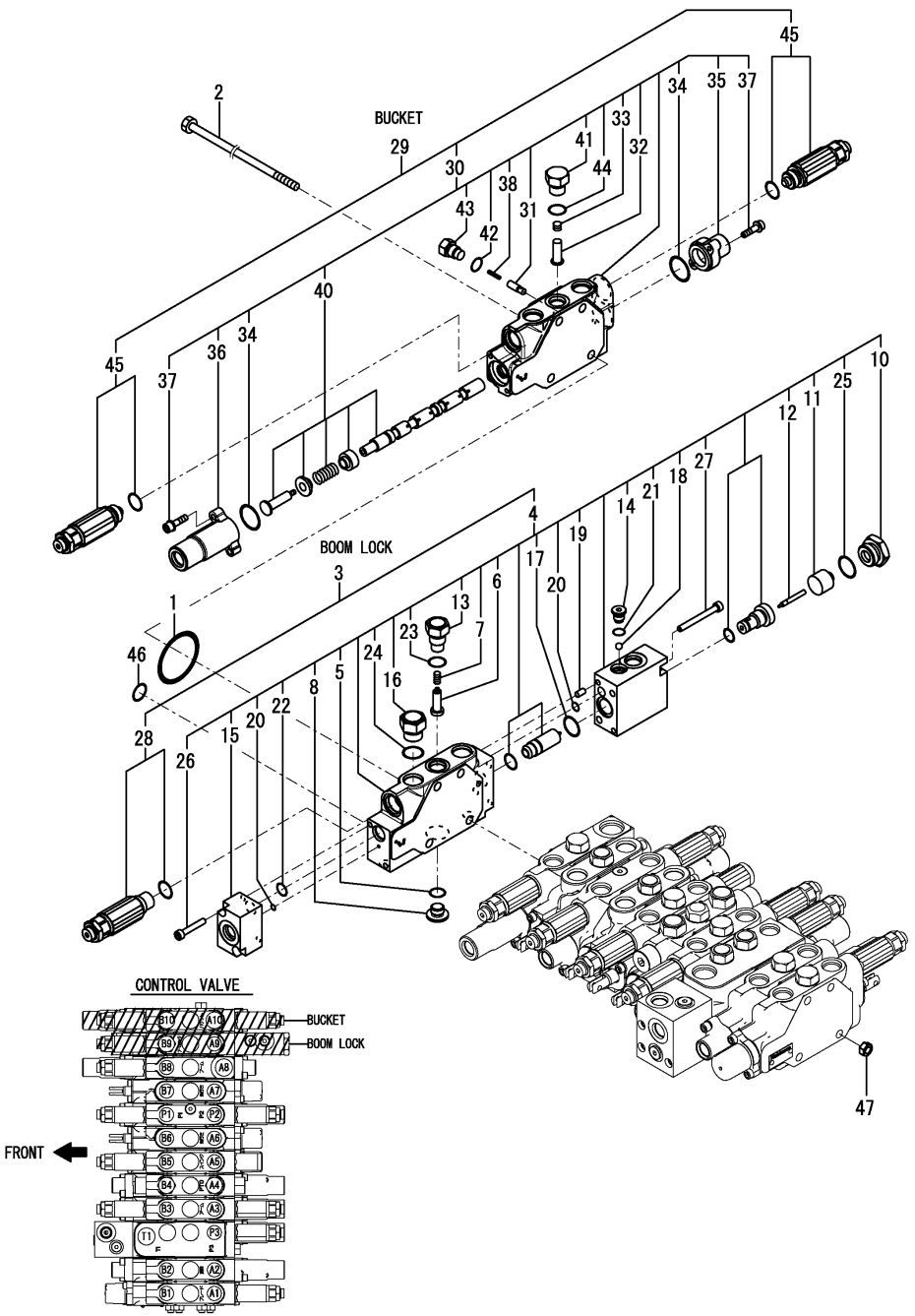


| No. | Lev. | Parts No. | Description | Q'ty (A) | (B) | (C) | (D) | (E) | (F) | I | R |
|---|---|---|---|---|---|---|---|---|---|---|---|
| 1 | 2 | 172458-74720 | O-RING, 1BW G4 | 11 | | | | | | | |
| 2 | 2 | 172458-74730 | BOLT, L380 | 4 | | | | | | | |
| 3 | 2 | 172B02-74890 | VALVE ASSY, LOCK | 1 | | | | | | | |
| 4 | 3 | 172B02-74450 | SECTION ASSY, LOCK | 1 | | | | | | | |
| 5 | 4 | 172A47-74270 | O-RING, 1B S16 | 1 | | | | | | | |
| 6 | 4 | 172458-74290 | VALVE, REVERSE | 1 | | | | | | | |
| 7 | 4 | 172458-74360 | SPRING, CHECK VALVE | 1 | | | | | | | |
| 8 | 4 | 172A47-74460 | PLUG, M12X1.25 | 1 | | | | | | | |
| 10 | 4 | 172A47-74560 | BUSH, PF1/2X1/4 | 1 | | | | | | | |
| 11 | 4 | 172A47-74570 | PISTON, B | 1 | | | | | | | |
| 12 | 4 | 172A47-74580 | PISTON, A1 | 1 | | | | | | | |
| 13 | 4 | 172458-74640 | STAY, CHECK VALVE | 1 | | | | | | | |
| 14 | 4 | 172A47-74920 | HOLDER, BALL | 1 | | | | | | | |
| 15 | 4 | 172A47-74930 | BODY, DISCHARGE | 1 | | | | | | | |
| 16 | 4 | 172A47-75620 | STAY, CHECK VALVE | 1 | | | | | | | |
| 17 | 4 | 172A47-75680 | O-RING, AS 1B17 | 1 | | | | | | | |
| 18 | 4 | 172A47-75690 | BALL, STEEL 7MM | 1 | | | | | | | |
| 19 | 4 | 22312-050100 | PIN, PARALLEL M5X10 | 2 | | | | | | | |
| 20 | 4 | 24311-000060 | O-RING, 1AP6.0 | 2 | | | | | | | |
| 21 | 4 | 24315-000080 | O-RING, 1BP8.0 | 1 | | | | | | | |
| 22 | 4 | 24315-000100 | O-RING, 1BP10.0 | 1 | | | | | | | |
| 23 | 4 | 24315-000110 | O-RING, 1BP11.0 | 1 | | | | | | | |
| 24 | 4 | 24315-000140 | O-RING, 1BP14.0 | 1 | | | | | | | |
| 25 | 4 | 24315-000180 | O-RING, 1BP18.0 | 1 | | | | | | | |
| 26 | 4 | 26450-050302 | BOLT, M5X 30 | 2 | | | | | | | |
| 27 | 4 | 26450-060652 | BOLT, M6X 65 | 2 | | | | | | | |
| 28 | 3 | 172456-74440 | VALVE, RELIEF 300/5 | 1 | | | | | | | |
| 29 | 2 | 172B02-74900 | VALVE ASSY, BUCKET | 1 | | | | | | | |
| 30 | 3 | 172B02-74470 | SECTION ASSY, BUCKET | 1 | | | | | | | |
| 31 | 4 | 172499-70180 | VALVE ASSY, REVERSE | 1 | | | | | | | |
| 32 | 4 | 172458-74150 | VALVE, REVERSE | 1 | | | | | | | |
| 33 | 4 | 172458-74160 | SPRING, CHECK VALVE | 1 | | | | | | | |
| 34 | 4 | 172458-74230 | O-RING, 1B S22 | 2 | | | | | | | |
| 35 | 4 | 172458-74240 | COVER, PILOT B1 | 1 | | | | | | | |
| 36 | 4 | 172458-74250 | COVER, PILOT A1 | 1 | | | | | | | |
| 37 | 4 | 172458-74260 | BOLT, HEXAGON 5X20 | 4 | | | | | | | |
| 38 | 4 | 172173-74280 | SPRING, CHECK | 1 | | | | | | | |
| 40 | 4 | 172B02-74490 | SPOOL ASSY, BUCKET | 1 | | | | | | | |
| 41 | 4 | 172458-74630 | STAY, CHECK VALVE | 1 | | | | | | | |
| 42 | 4 | 172A47-74950 | O-RING, AS568-904 | 1 | | | | | | | |
| 43 | 4 | 172A47-74970 | STAY, CHECK VALVE | 1 | | | | | | | |
| 44 | 4 | 24315-000110 | O-RING, 1BP11.0 | 1 | | | | | | | |
| 45 | 3 | 172B02-74750 | RELIEF ASSY,ORV 25.5 | 2 | | | | | | | |
| 46 | 2 | 24311-000200 | O-RING, 1AP20.0 | 11 | | | | | | | |
| 47 | 2 | 26716-080002 | NUT, M8 | 4 | | | | | | | |

N:Old $\overset{\text{Yes}}{\underset{\text{No}}{\leftrightarrows}}$ New, Q:Old $\overset{\text{No}}{\underset{\text{Yes}}{\leftrightarrows}}$ New, R:Old $\overset{\text{Yes}}{\underset{\text{Yes}}{\leftrightarrows}}$ New, S:Old $\overset{\text{No}}{\underset{\text{No}}{\leftrightarrows}}$ New, W:Add, Z:Discontinued, F:Interchangeable by set, K:Q'ty Change

Copyright (C) YANMAR GLOBAL CS CO., LTD. All RightsReserved.

# Fig.126. (82C)CONTROL VALVE(3/7)(P.T.O. HAND OPERATE SPEC.)(FROM M60544)

(A)=VIO30-6B P(KR)
(B)=
(C)=
(D)=
(E)=
(F)=

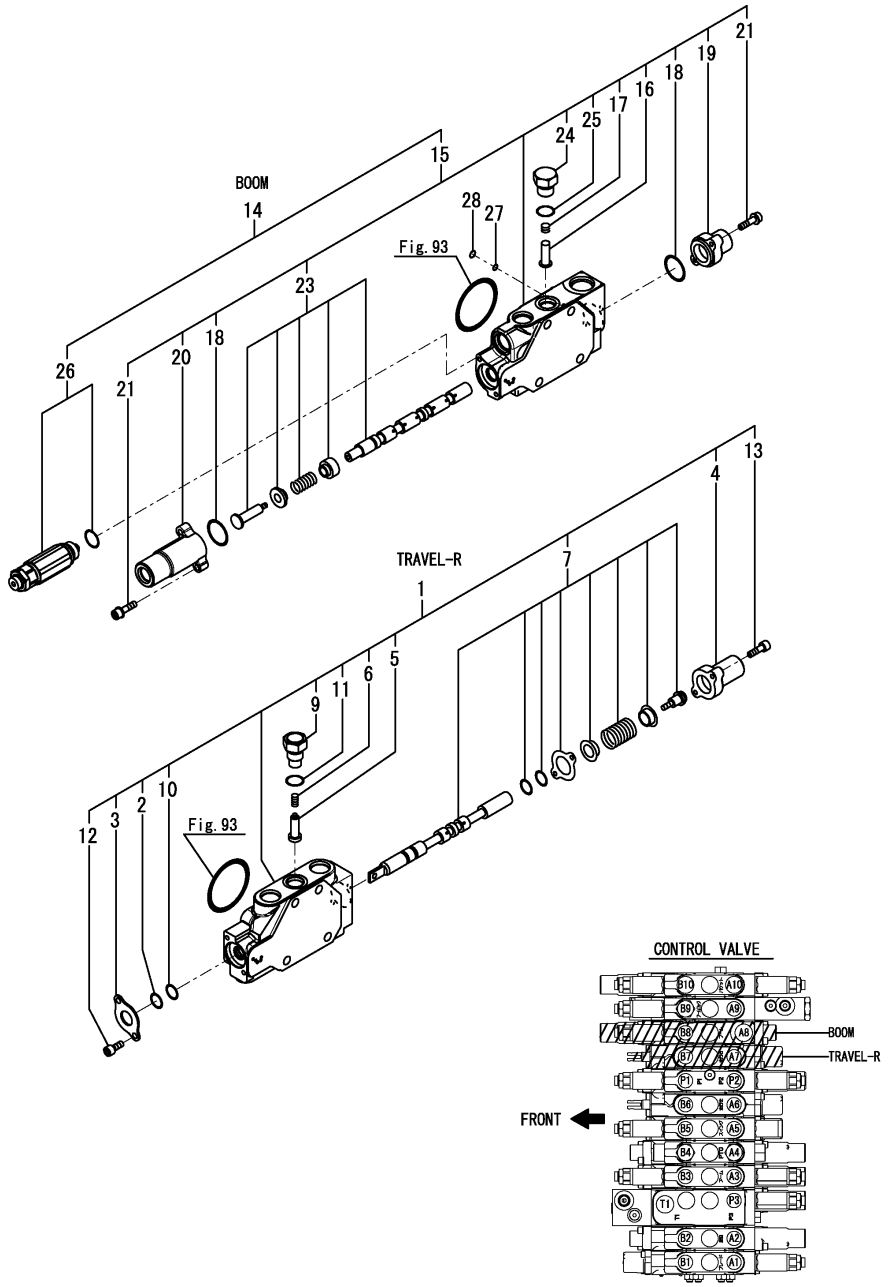


| No. | Lev. | Parts No. | Description | Q'ty (A) | (B) | (C) | (D) | (E) | (F) | I | R |
|---|---|---|---|---|---|---|---|---|---|---|---|
| 1 | 2 | 172B02-74400 | SECTION ASSY,TRAVEL2 | 1 | | | | | | | |
| 2 | 3 | 172458-74130 | WIPER, DUST | 1 | | | | | | | |
| 3 | 3 | 172458-74140 | RETAINER, SEAL | 1 | | | | | | | |
| 4 | 3 | 172458-74170 | CAP, SPRING | 1 | | | | | | | |
| 5 | 3 | 172458-74290 | VALVE, REVERSE | 1 | | | | | | | |
| 6 | 3 | 172458-74360 | SPRING, CHECK VALVE | 1 | | | | | | | |
| 7 | 3 | 172B02-74370 | SPOOL ASSY, TRAVEL | 1 | | | | | | | |
| 9 | 3 | 172458-74640 | STAY, CHECK VALVE | 1 | | | | | | | |
| 10 | 3 | 24311-000120 | O-RING, 1AP12.0 | 1 | | | | | | | |
| 11 | 3 | 24315-000110 | O-RING, 1BP11.0 | 1 | | | | | | | |
| 12 | 3 | 26450-050102 | BOLT, M5X 10 | 2 | | | | | | | |
| 13 | 3 | 26450-050182 | BOLT, M5X 18 | 2 | | | | | | | |
| 14 | 2 | 172B02-74880 | VALVE ASSY, BOOM | 1 | | | | | | | |
| 15 | 3 | 172B02-74420 | SECTION ASSY, BOOM | 1 | | | | | | | |
| 16 | 4 | 172458-74150 | VALVE, REVERSE | 1 | | | | | | | |
| 17 | 4 | 172458-74160 | SPRING, CHECK VALVE | 1 | | | | | | | |
| 18 | 4 | 172458-74230 | O-RING, 1B S22 | 2 | | | | | | | |
| 19 | 4 | 172458-74240 | COVER, PILOT B1 | 1 | | | | | | | |
| 20 | 4 | 172458-74250 | COVER, PILOT A1 | 1 | | | | | | | |
| 21 | 4 | 172458-74260 | BOLT, HEXAGON 5X20 | 4 | | | | | | | |
| 23 | 4 | 172B02-74440 | SPOOL ASSY, BOOM | 1 | | | | | | | |
| 24 | 4 | 172458-74630 | STAY, CHECK VALVE | 1 | | | | | | | |
| 25 | 4 | 24315-000110 | O-RING, 1BP11.0 | 1 | | | | | | | |
| 26 | 3 | 172B02-74740 | RELIEF ASSY,ORV 23.5 | 1 | | | | | | | |
| 27 | 2 | 24315-000090 | O-RING, 1BP9.0 | 1 | | | | | | | |
| 28 | 2 | 24315-000100 | O-RING, 1BP10.0 | 1 | | | | | | | |

N:Old $\overset{\text{Yes}}{\underset{\text{No}}{\rightleftarrows}}$ New, Q:Old $\overset{\text{No}}{\underset{\text{Yes}}{\rightleftarrows}}$ New, R:Old $\overset{\text{Yes}}{\underset{\text{Yes}}{\rightleftarrows}}$ New, S:Old $\overset{\text{No}}{\underset{\text{No}}{\rightleftarrows}}$ New, W:Add, Z:Discontinued, F:Interchangeable by set, K:Q'ty Change

Copyright (C) YANMAR GLOBAL CS CO., LTD. All RightsReserved.

# Fig.127. (82D)CONTROL VALVE(4/7)(P.T.O. HAND OPERATE SPEC.)(FROM M60544)

(A)=VIO30-6B P(KR)
(B)=
(C)=
(D)=
(E)=
(F)=

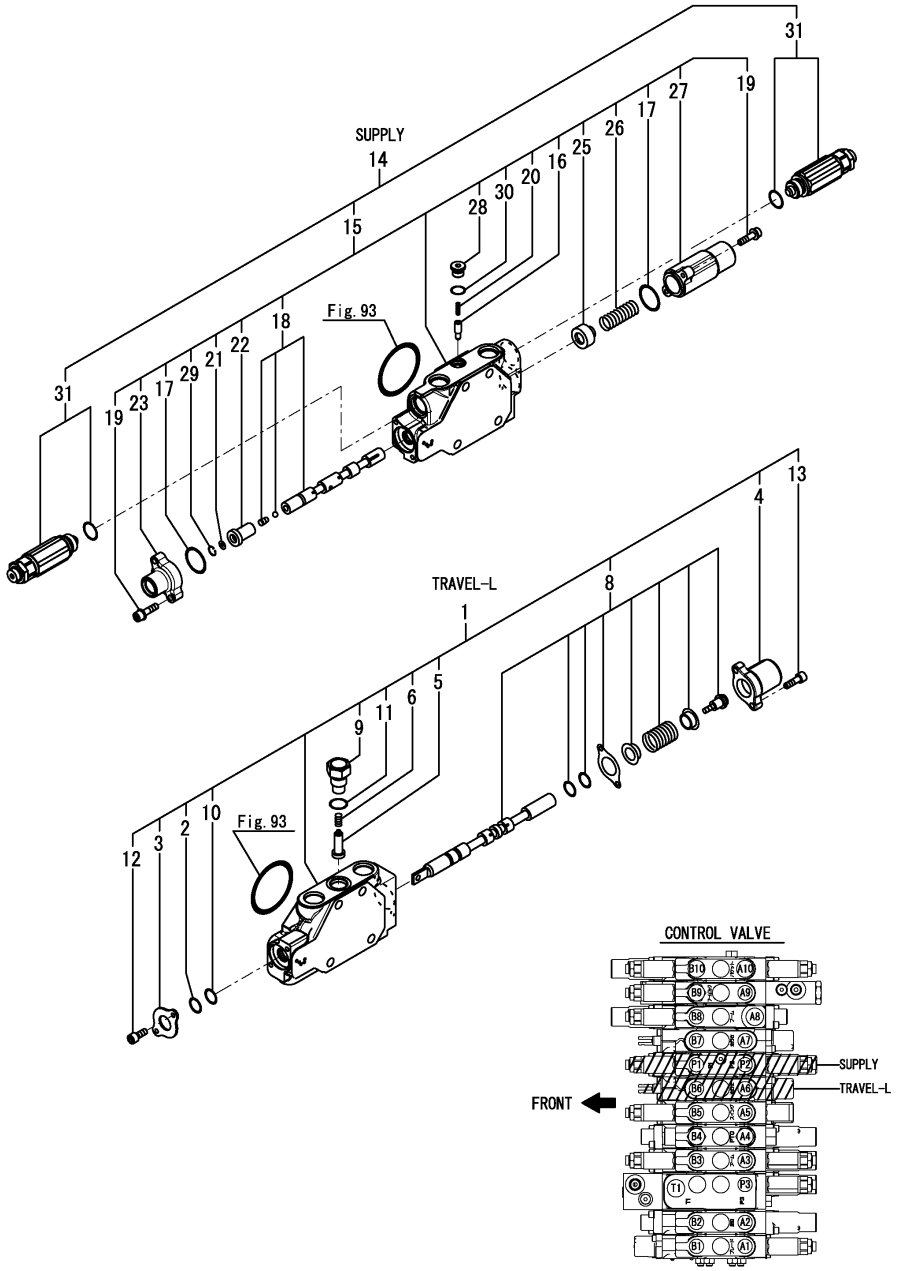


| No. | Lev. | Parts No. | Description | Q'ty (A) | (B) | (C) | (D) | (E) | (F) | I | R |
|---|---|---|---|---|---|---|---|---|---|---|---|
| 1 | 2 | 172B02-74350 | SECTION ASSY,TRAVEL1 | 1 | | | | | | | |
| 2 | 3 | 172458-74130 | WIPER, DUST | 1 | | | | | | | |
| 3 | 3 | 172458-74140 | RETAINER, SEAL | 1 | | | | | | | |
| 4 | 3 | 172458-74170 | CAP, SPRING | 1 | | | | | | | |
| 5 | 3 | 172458-74290 | VALVE, REVERSE | 1 | | | | | | | |
| 6 | 3 | 172458-74360 | SPRING, CHECK VALVE | 1 | | | | | | | |
| 8 | 3 | 172B02-74370 | SPOOL ASSY, TRAVEL | 1 | | | | | | | |
| 9 | 3 | 172458-74640 | STAY, CHECK VALVE | 1 | | | | | | | |
| 10 | 3 | 24311-000120 | O-RING, 1AP12.0 | 1 | | | | | | | |
| 11 | 3 | 24315-000110 | O-RING, 1BP11.0 | 1 | | | | | | | |
| 12 | 3 | 26450-050102 | BOLT, M5X 10 | 2 | | | | | | | |
| 13 | 3 | 26450-050182 | BOLT, M5X 18 | 2 | | | | | | | |
| 14 | 2 | 172B02-74870 | VALVE ASSY, INLET | 1 | | | | | | | |
| 15 | 3 | 172B02-74380 | SECTION ASSY, INLET | 1 | | | | | | | |
| 16 | 4 | 172499-70180 | VALVE ASSY, REVERSE | 1 | | | | | | | |
| 17 | 4 | 172458-74230 | O-RING, 1B S22 | 2 | | | | | | | |
| 18 | 4 | 172A46-74250 | SPOOL ASSY, INLET | 1 | | | | | | | |
| 19 | 4 | 172458-74260 | BOLT, HEXAGON 5X20 | 4 | | | | | | | |
| 20 | 4 | 172173-74280 | SPRING, CHECK | 1 | | | | | | | |
| 21 | 4 | 172A47-74360 | FILTER | 1 | | | | | | | |
| 22 | 4 | 172A47-74370 | PISTON | 1 | | | | | | | |
| 23 | 4 | 172A47-74380 | COVER, PILOT B5 | 1 | | | | | | | |
| 25 | 4 | 172458-74530 | SEAT, SPRING | 1 | | | | | | | |
| 26 | 4 | 172458-74540 | SPRING, RETURN | 1 | | | | | | | |
| 27 | 4 | 172458-74550 | COVER, PILOT A2 | 1 | | | | | | | |
| 28 | 4 | 172458-74670 | PLUG, PF1/8 | 1 | | | | | | | |
| 29 | 4 | 172A47-74980 | CIRCLIP | 1 | | | | | | | |
| 30 | 4 | 24315-000080 | O-RING, 1BP8.0 | 1 | | | | | | | |
| 31 | 3 | 172B02-74710 | RELIEF ASSY, 20.6 | 2 | | | | | | | |

N:Old $\overset{\text{Yes}}{\underset{\text{No}}{\rightleftarrows}}$ New, Q:Old $\overset{\text{No}}{\underset{\text{Yes}}{\rightleftarrows}}$ New, R:Old $\overset{\text{Yes}}{\underset{\text{Yes}}{\rightleftarrows}}$ New, S:Old $\overset{\text{No}}{\underset{\text{No}}{\rightleftarrows}}$ New, W:Add, Z:Discontinued, F:Interchangeable by set, K:Q'ty Change

Copyright (C) YANMAR GLOBAL CS CO., LTD. All RightsReserved.

# Fig.128. (82E)CONTROL VALVE(5/7)(P.T.O. HAND OPERATE SPEC.)(FROM M60544)

(A)=VIO30-6B P(KR)
(B)=
(C)=
(D)=
(E)=
(F)=

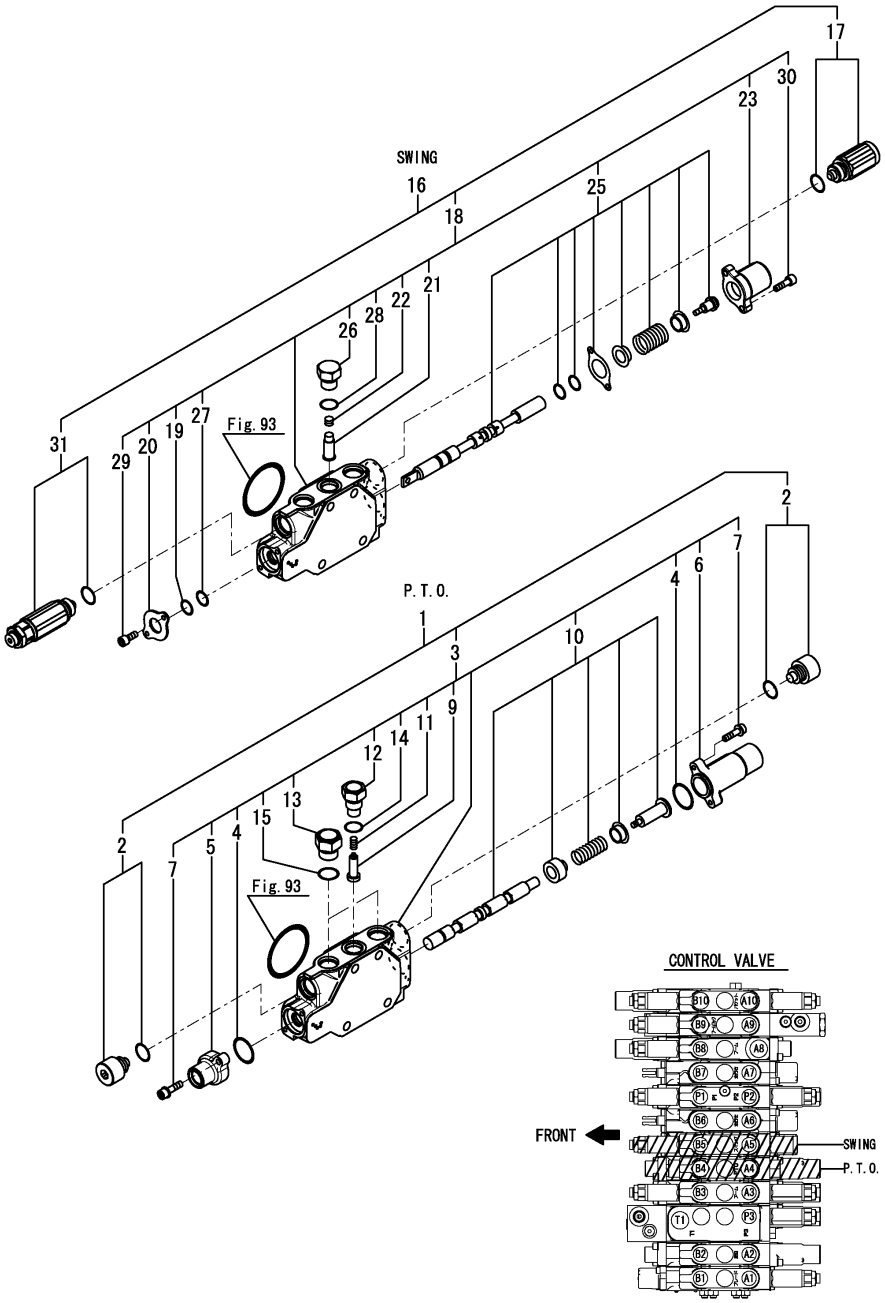


| No. | Lev. | Parts No. | Description | Q'ty (A) | (B) | (C) | (D) | (E) | (F) | I | R |
|---|---|---|---|---|---|---|---|---|---|---|---|
| 1 | 2 | 172B02-74850 | VALVE ASSY, PTO | 1 | | | | | | | |
| 2 | 3 | 172A47-75460 | PLUG ASSY, VALVE | 2 | | | | | | | |
| 3 | 3 | 172B02-74290 | SECTION ASSY, PTO | 1 | | | | | | | |
| 4 | 4 | 172458-74230 | O-RING, 1B S22 | 2 | | | | | | | |
| 5 | 4 | 172458-74240 | COVER, PILOT B1 | 1 | | | | | | | |
| 6 | 4 | 172458-74250 | COVER, PILOT A1 | 1 | | | | | | | |
| 7 | 4 | 172458-74260 | BOLT, HEXAGON 5X20 | 4 | | | | | | | |
| 9 | 4 | 172490-74310 | VALVE, REVERSE | 1 | | | | | | | |
| 10 | 4 | 172B02-74310 | SPOOL ASSY, PTO | 1 | | | | | | | |
| 11 | 4 | 172490-74320 | SPRING, CHECK VALVE | 1 | | | | | | | |
| 12 | 4 | 172490-74330 | STAY, CHECK VALVE | 1 | | | | | | | |
| 13 | 4 | 172A47-75620 | STAY, CHECK VALVE | 2 | | | | | | | |
| 14 | 4 | 24315-000110 | O-RING, 1BP11.0 | 1 | | | | | | | |
| 15 | 4 | 24315-000140 | O-RING, 1BP14.0 | 2 | | | | | | | |
| 16 | 2 | 172B02-74860 | VALVE ASSY, SWING | 1 | | | | | | | |
| 17 | 3 | 172447-74230 | ANTI-CAVITATION ASSY | 1 | | | | | | | |
| 18 | 3 | 172B02-74320 | SECTION ASSY, SWING | 1 | | | | | | | |
| 19 | 4 | 172458-74130 | WIPER, DUST | 1 | | | | | | | |
| 20 | 4 | 172458-74140 | RETAINER, SEAL | 1 | | | | | | | |
| 21 | 4 | 172458-74150 | VALVE, REVERSE | 1 | | | | | | | |
| 22 | 4 | 172458-74160 | SPRING, CHECK VALVE | 1 | | | | | | | |
| 23 | 4 | 172458-74170 | CAP, SPRING | 1 | | | | | | | |
| 25 | 4 | 172B02-74340 | SPOOL ASSY, SWING | 1 | | | | | | | |
| 26 | 4 | 172458-74630 | STAY, CHECK VALVE | 1 | | | | | | | |
| 27 | 4 | 24311-000120 | O-RING, 1AP12.0 | 1 | | | | | | | |
| 28 | 4 | 24315-000110 | O-RING, 1BP11.0 | 1 | | | | | | | |
| 29 | 4 | 26450-050102 | BOLT, M5X 10 | 2 | | | | | | | |
| 30 | 4 | 26450-050182 | BOLT, M5X 18 | 2 | | | | | | | |
| 31 | 3 | 172B02-74750 | RELIEF ASSY,ORV 25.5 | 1 | | | | | | | |

N:Old $\overset{\text{Yes}}{\underset{\text{No}}{\leftrightarrows}}$ New, Q:Old $\overset{\text{No}}{\underset{\text{Yes}}{\leftrightarrows}}$ New, R:Old $\overset{\text{Yes}}{\underset{\text{Yes}}{\leftrightarrows}}$ New, S:Old $\overset{\text{No}}{\underset{\text{No}}{\leftrightarrows}}$ New, W:Add, Z:Discontinued, F:Interchangeable by set, K:Q'ty Change

Copyright (C) YANMAR GLOBAL CS CO., LTD. All RightsReserved.

# Fig.129. (82F)CONTROL VALVE(6/7)(P.T.O. HAND OPERATE SPEC.)(FROM M60544)

(A)=VIO30-6B P(KR)
(B)=
(C)=
(D)=
(E)=
(F)=

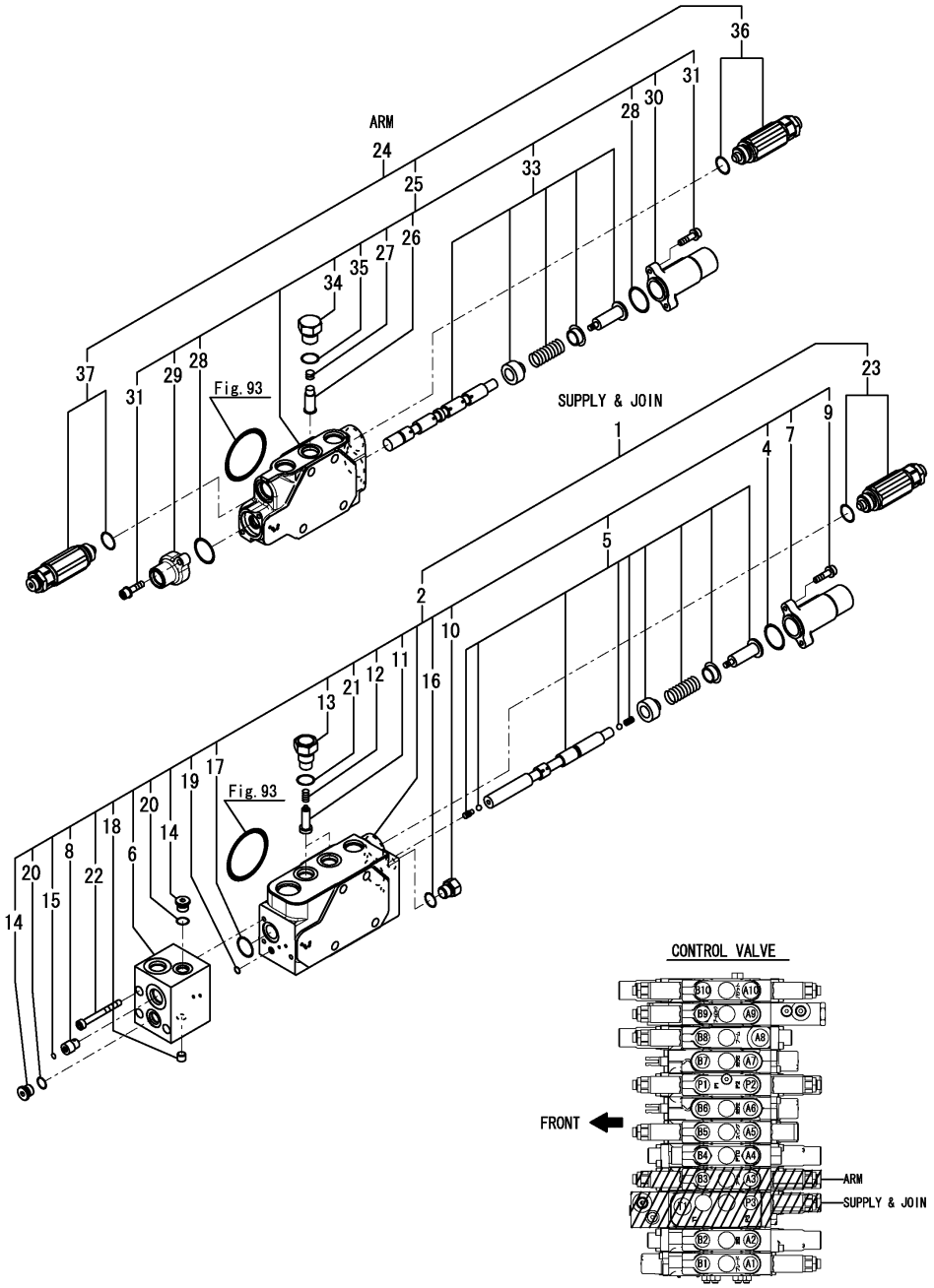


| No. | Lev. | Parts No. | Description | Q'ty (A) | (B) | (C) | (D) | (E) | (F) | I | R |
|---|---|---|---|---|---|---|---|---|---|---|---|
| 1 | 2 | 172B02-74830 | VALVE ASSY, CONFLUX | 1 | | | | | | | |
| 2 | 3 | 172B02-74210 | SECTION ASSY,CONFLUX | 1 | | | | | | | |
| 4 | 4 | 172458-74230 | O-RING, 1B S22 | 1 | | | | | | | |
| 5 | 4 | 172B02-74230 | SPOOL ASSY, CONFLUX | 1 | | | | | | | |
| 6 | 4 | 172B02-74240 | BLOCK, PILOT | 1 | | | | | | | |
| 7 | 4 | 172458-74250 | COVER, PILOT A1 | 1 | | | | | | | |
| 8 | 4 | 172B02-74250 | PLUG, THROTTLE | 1 | | | | | | | |
| 9 | 4 | 172458-74260 | BOLT, HEXAGON 5X20 | 2 | | | | | | | |
| 10 | 4 | 172A47-74260 | PLUG, SAE1/4 | 1 | | | | | | | |
| 11 | 4 | 172458-74290 | VALVE, REVERSE | 2 | | | | | | | |
| 12 | 4 | 172458-74360 | SPRING, CHECK VALVE | 2 | | | | | | | |
| 13 | 4 | 172458-74640 | STAY, CHECK VALVE | 2 | | | | | | | |
| 14 | 4 | 172458-74670 | PLUG, PF1/8 | 2 | | | | | | | |
| 15 | 4 | 172499-74860 | FILTER, COIN | 1 | | | | | | | |
| 16 | 4 | 172A47-74950 | O-RING, AS568-904 | 1 | | | | | | | |
| 17 | 4 | 172A47-75680 | O-RING, AS 1B17 | 1 | | | | | | | |
| 18 | 4 | 172A47-75720 | PLUG, NPT1/16 | 1 | | | | | | | |
| 19 | 4 | 24315-000050 | O-RING, 1BP5.0 | 2 | | | | | | | |
| 20 | 4 | 24315-000080 | O-RING, 1BP8.0 | 2 | | | | | | | |
| 21 | 4 | 24315-000110 | O-RING, 1BP11.0 | 2 | | | | | | | |
| 22 | 4 | 26450-050502 | BOLT, M5X 50 | 3 | | | | | | | |
| 23 | 3 | 172B02-74720 | RELIEF ASSY, 19.6 | 1 | | | | | | | |
| 24 | 2 | 172B02-74840 | VALVE ASSY, ARM | 1 | | | | | | | |
| 25 | 3 | 172B02-74260 | SECTION ASSY, ARM | 1 | | | | | | | |
| 26 | 4 | 172458-74150 | VALVE, REVERSE | 1 | | | | | | | |
| 27 | 4 | 172458-74160 | SPRING, CHECK VALVE | 1 | | | | | | | |
| 28 | 4 | 172458-74230 | O-RING, 1B S22 | 2 | | | | | | | |
| 29 | 4 | 172458-74240 | COVER, PILOT B1 | 1 | | | | | | | |
| 30 | 4 | 172458-74250 | COVER, PILOT A1 | 1 | | | | | | | |
| 31 | 4 | 172458-74260 | BOLT, HEXAGON 5X20 | 4 | | | | | | | |
| 33 | 4 | 172B02-74280 | SPOOL ASSY, ARM | 1 | | | | | | | |
| 34 | 4 | 172458-74630 | STAY, CHECK VALVE | 1 | | | | | | | |
| 35 | 4 | 24315-000110 | O-RING, 1BP11.0 | 1 | | | | | | | |
| 36 | 3 | 172B02-74740 | RELIEF ASSY,ORV 23.5 | 1 | | | | | | | |
| 37 | 3 | 172B02-74750 | RELIEF ASSY,ORV 25.5 | 1 | | | | | | | |

N:Old $\overset{\text{Yes}}{\underset{\text{No}}{\rightleftarrows}}$ New, Q:Old $\overset{\text{No}}{\underset{\text{Yes}}{\rightleftarrows}}$ New, R:Old $\overset{\text{Yes}}{\underset{\text{Yes}}{\rightleftarrows}}$ New, S:Old $\overset{\text{No}}{\underset{\text{No}}{\rightleftarrows}}$ New, W:Add, Z:Discontinued, F:Interchangeable by set, K:Q'ty Change

Copyright (C) YANMAR GLOBAL CS CO., LTD. All RightsReserved.

# Fig.130. (82G)CONTROL VALVE(7/7)(P.T.O. HAND OPERATE SPEC.)(FROM M60544)

(A)=VIO30-6B P(KR)
(B)=
(C)=
(D)=
(E)=
(F)=

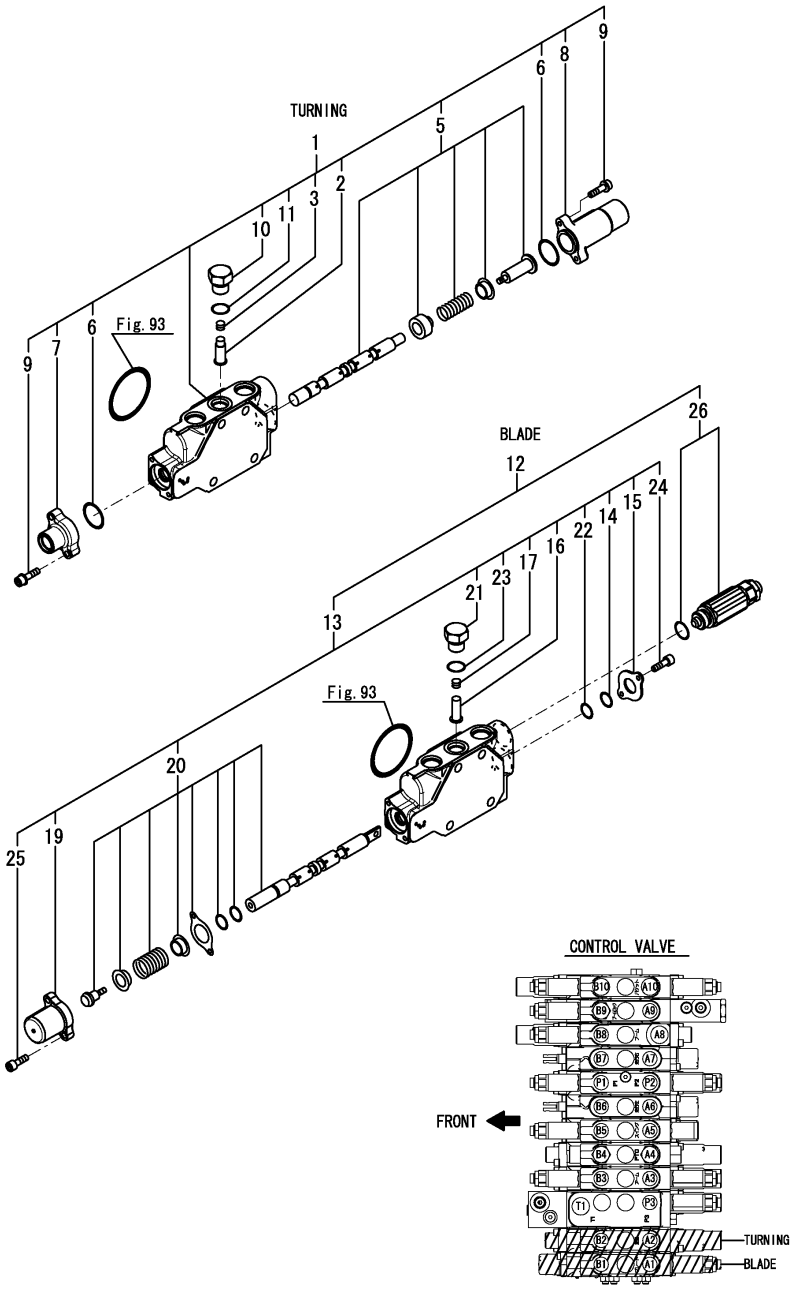


| No. | Lev. | Parts No. | Description | Q'ty (A) | (B) | (C) | (D) | (E) | (F) | I | R |
|---|---|---|---|---|---|---|---|---|---|---|---|
| 1 | 2 | 172B02-74180 | SECTION ASSY, SWING | 1 | | | | | | | |
| 2 | 3 | 172458-74150 | VALVE, REVERSE | 1 | | | | | | | |
| 3 | 3 | 172458-74160 | SPRING, CHECK VALVE | 1 | | | | | | | |
| 5 | 3 | 172B02-74200 | SPOOL ASSY, TURNING | 1 | | | | | | | |
| 6 | 3 | 172458-74230 | O-RING, 1B S22 | 2 | | | | | | | |
| 7 | 3 | 172458-74240 | COVER, PILOT B1 | 1 | | | | | | | |
| 8 | 3 | 172458-74250 | COVER, PILOT A1 | 1 | | | | | | | |
| 9 | 3 | 172458-74260 | BOLT, HEXAGON 5X20 | 4 | | | | | | | |
| 10 | 3 | 172458-74630 | STAY, CHECK VALVE | 1 | | | | | | | |
| 11 | 3 | 24315-000110 | O-RING, 1BP11.0 | 1 | | | | | | | |
| 12 | 2 | 172B02-74820 | VALVE ASSY, BLADE | 1 | | | | | | | |
| 13 | 3 | 172B02-74150 | SECTION ASSY, BLADE | 1 | | | | | | | |
| 14 | 4 | 172458-74130 | WIPER, DUST | 1 | | | | | | | |
| 15 | 4 | 172458-74140 | RETAINER, SEAL | 1 | | | | | | | |
| 16 | 4 | 172458-74150 | VALVE, REVERSE | 1 | | | | | | | |
| 17 | 4 | 172458-74160 | SPRING, CHECK VALVE | 1 | | | | | | | |
| 19 | 4 | 172458-74170 | CAP, SPRING | 1 | | | | | | | |
| 20 | 4 | 172B02-74170 | SPOOL ASSY, BLADE | 1 | | | | | | | |
| 21 | 4 | 172458-74630 | STAY, CHECK VALVE | 1 | | | | | | | |
| 22 | 4 | 24311-000120 | O-RING, 1AP12.0 | 1 | | | | | | | |
| 23 | 4 | 24315-000110 | O-RING, 1BP11.0 | 1 | | | | | | | |
| 24 | 4 | 26450-050102 | BOLT, M5X 10 | 2 | | | | | | | |
| 25 | 4 | 26450-050182 | BOLT, M5X 18 | 2 | | | | | | | |
| 26 | 3 | 172B02-74730 | RELIEF ASSY, ORV 9.8 | 1 | | | | | | | |

N:Old $\overset{\text{Yes}}{\underset{\text{No}}{\rightleftarrows}}$ New, Q:Old $\overset{\text{No}}{\underset{\text{Yes}}{\rightleftarrows}}$ New, R:Old $\overset{\text{Yes}}{\underset{\text{Yes}}{\rightleftarrows}}$ New, S:Old $\overset{\text{No}}{\underset{\text{No}}{\rightleftarrows}}$ New, W:Add, Z:Discontinued, F:Interchangeable by set, K:Q'ty Change

Copyright (C) YANMAR GLOBAL CS CO., LTD. All RightsReserved.

# Fig.83. REMOTE CONTROL VALVE(TO M60543)



(A)=VIO30-6B P(KR)
(B)=
(C)=
(D)=
(E)=
(F)=

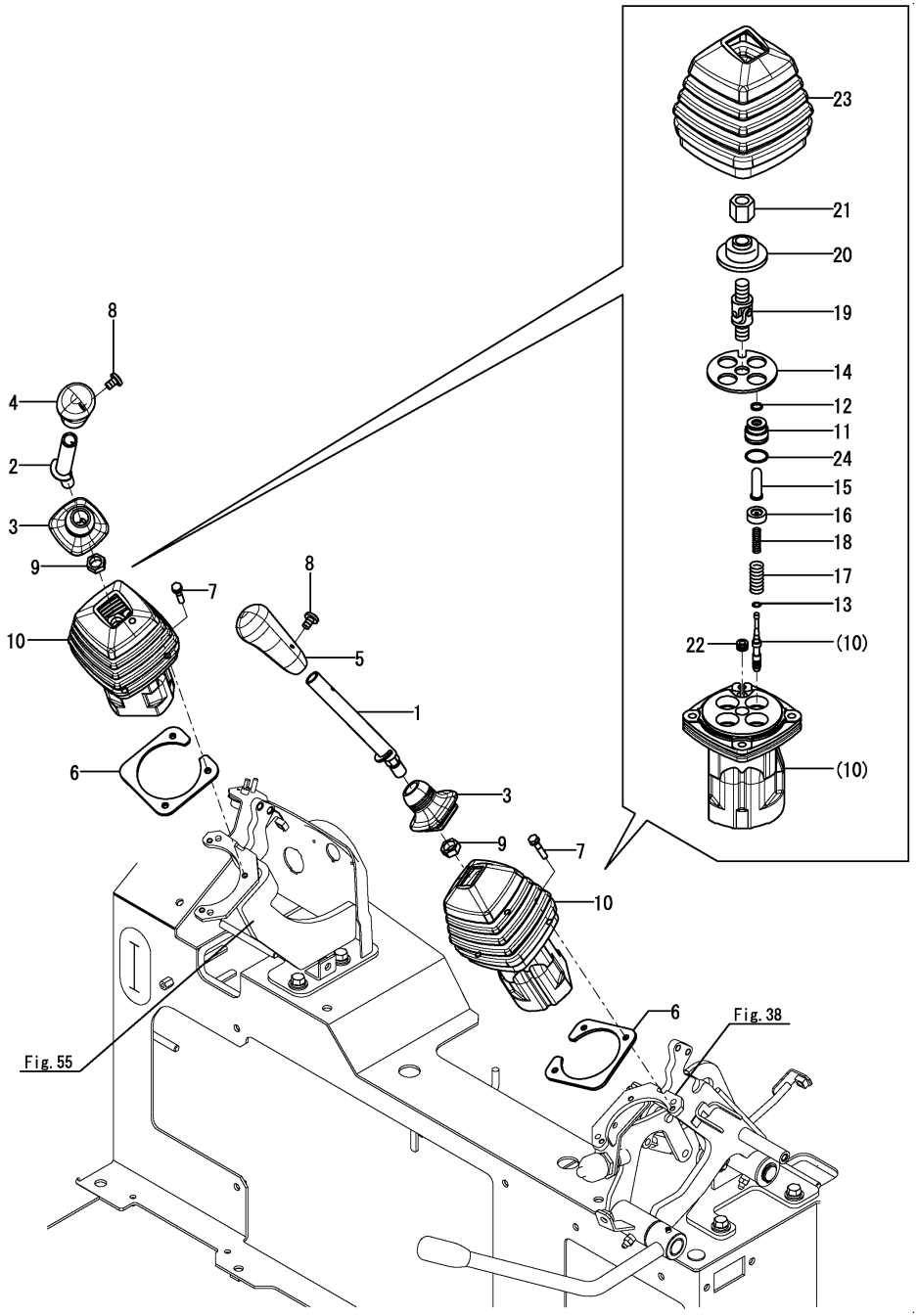


| No. | Lev. | Parts No. | Description | Q'ty (A) | (B) | (C) | (D) | (E) | (F) | I | R |
|---|---|---|---|---|---|---|---|---|---|---|---|
| 1 | 1 | 172B03-45010 | LEVER ASSY, L | 1 | | | | | | | |
| 2 | 1 | 172B03-45050 | LEVER ASSY, R | 1 | | | | | | | |
| 3 | 1 | 172B03-45070 | BOOT, LEVER | 2 | | | | | | | |
| 4 | 1 | 172A46-45500 | KNOB ASSY, R | 1 | | | | | | | |
| 5 | 1 | 172A46-45510 | KNOB ASSY, L | 1 | | | | | | | |
| 6 | 1 | 172A78-74650 | PLATE ASSY, VALVE | 2 | | | | | | | |
| 7 | 1 | 26013-060302 | BOLT, M6X 30 | 6 | | | | | | | |
| 8 | 1 | 26587-040062 | SCREW, M4X 6 | 2 | | | | | | | |
| 9 | 1 | 26756-140002 | NUT, LOCK M14 | 2 | | | | | | | |
| 10 | 1 | 172B03-74500 | VALVE ASSY, REMO-CON | 2 | | | | | | | |
| 11 | 2 | 172151-73400 | PLUG | 8 | | | | | | | |
| 12 | 2 | 172151-73420 | SEAL | 8 | | | | | | | |
| 13 | 2 | 172151-73450 | WASHER | 8 | | | | | | | |
| 14 | 2 | 172A64-74590 | PLATE | 2 | | | | | | | |
| 15 | 2 | 172A64-74600 | ROD, PUSH | 8 | | | | | | | |
| 15-1 | 2 (A=MBF671) | 172A64-74601 | ROD, PUSH | 8 | | | | | | N | |
| 16 | 2 | 172A64-74610 | SEAT, SPRING | 8 | | | | | | | |
| 16-1 | 2 (A=MBF671) | 172A64-74611 | SEAT, SPRING | 8 | | | | | | N | |
| 17 | 2 | 172A64-74630 | SPRING | 8 | | | | | | | |
| 18 | 2 | 172B03-74630 | SPRING | 8 | | | | | | | |
| 19 | 2 | 172A64-74640 | JOINT | 2 | | | | | | | |
| 20 | 2 | 172A64-74650 | PLATE, CIRCULAR | 2 | | | | | | | |
| 21 | 2 | 172A64-74660 | NUT, ADJUST | 2 | | | | | | | |
| 22 | 2 | 172A64-74670 | BUSH | 2 | | | | | | | |
| 23 | 2 | 172A64-74680 | BELLOWS | 2 | | | | | | | |
| 24 | 2 | 24315-000200 | O-RING, 1BP20.0 | 8 | | | | | | | |

N:Old $\overset{\text{Yes}}{\underset{\text{No}}{\rightleftarrows}}$ New, Q:Old $\overset{\text{No}}{\underset{\text{Yes}}{\rightleftarrows}}$ New, R:Old $\overset{\text{Yes}}{\underset{\text{Yes}}{\rightleftarrows}}$ New, S:Old $\overset{\text{No}}{\underset{\text{No}}{\rightleftarrows}}$ New, W:Add, Z:Discontinued, F:Interchangeable by set, K:Q'ty Change

Copyright (C) YANMAR GLOBAL CS CO., LTD. All RightsReserved.

# Fig.131. (83A)REMOTE CONTROL VALVE(RIGHT)(P.T.O. HAND OPERATE SPEC.)(FROM M60544)

(A)=VIO30-6B P(KR)
(B)=
(C)=
(D)=
(E)=
(F)=

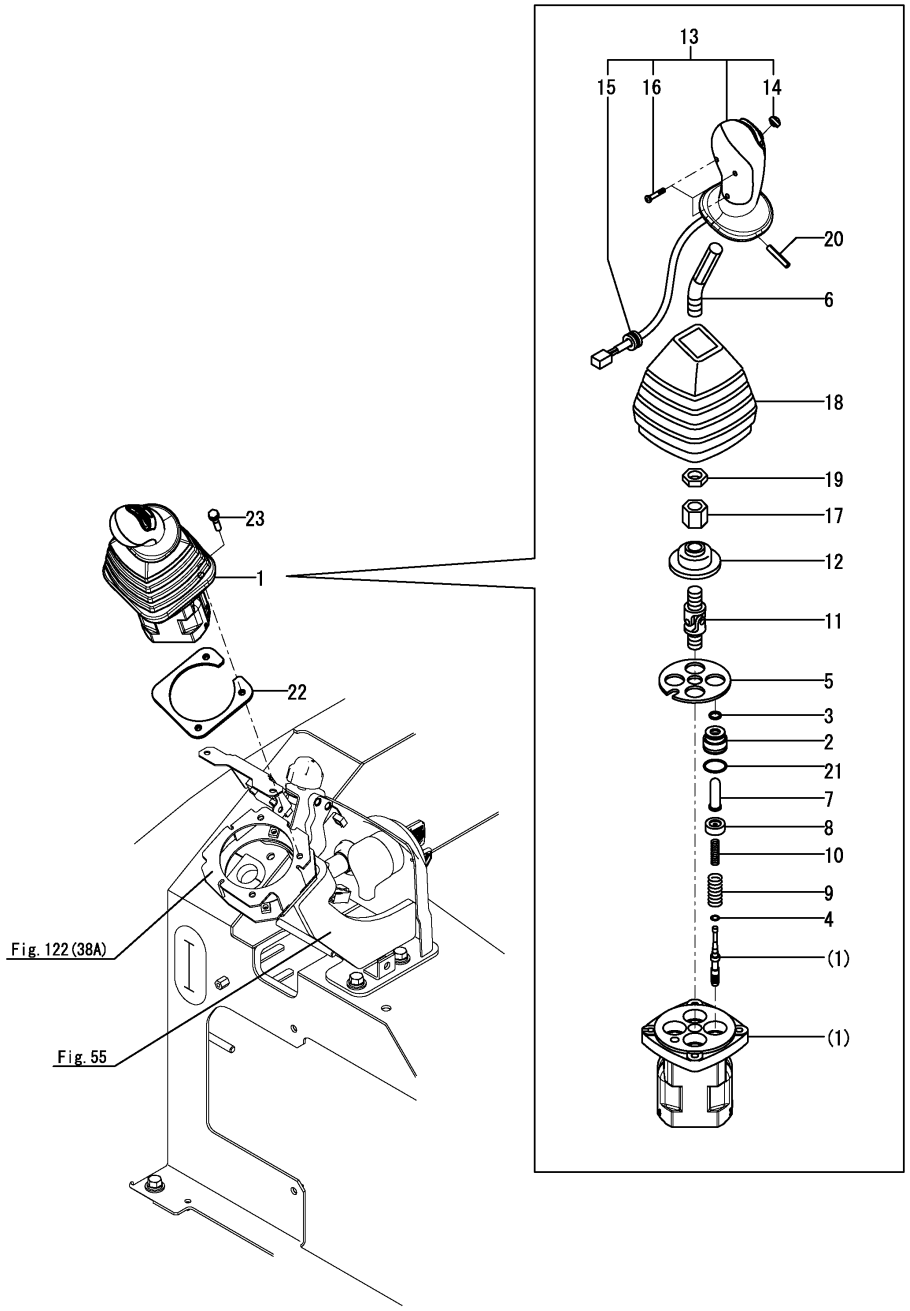


| No. | Lev. | Parts No. | Description | Q'ty (A) | (B) | (C) | (D) | (E) | (F) | I | R |
|---|---|---|---|---|---|---|---|---|---|---|---|
| 1 | 1 | 172B03-74530 | VALVE ASSY, R-PB | 1 | | | | | | | |
| 2 | 2 | 172151-73400 | PLUG | 4 | | | | | | | |
| 3 | 2 | 172151-73420 | SEAL | 4 | | | | | | | |
| 4 | 2 | 172151-73450 | WASHER | 4 | | | | | | | |
| 5 | 2 | 172A64-74590 | PLATE | 1 | | | | | | | |
| 6 | 2 | 172B03-74590 | LEVER | 1 | | | | | | | |
| 7 | 2 | 172A64-74600 | ROD, PUSH | 4 | | | | | | | |
| 7-1 | 2 | 172A64-74601 | ROD, PUSH | 4 | | | | | | N | |
| | (A=MBF671) | | | | | | | | | | |
| 8 | 2 | 172A64-74610 | SEAT, SPRING | 4 | | | | | | | |
| 8-1 | 2 | 172A64-74611 | SEAT, SPRING | 4 | | | | | | N | |
| | (A=MBF671) | | | | | | | | | | |
| 9 | 2 | 172A64-74620 | SPRING | 4 | | | | | | | |
| 10 | 2 | 172A64-74630 | SPRING | 4 | | | | | | | |
| 11 | 2 | 172A64-74640 | JOINT | 1 | | | | | | | |
| 12 | 2 | 172A64-74650 | PLATE, CIRCULAR | 1 | | | | | | | |
| 13 | 2 | 172B03-74650 | HANDLE ASSY, PB | 1 | | | | | | | |
| 14 | 3 | 172B03-74660 | COVER, SWITCH | 1 | | | | | | | |
| 15 | 3 | 172A64-74670 | BUSH | 1 | | | | | | | |
| 16 | 3 | 22853-300161 | SCREW, 3.0 X 16 | 3 | | | | | | | |
| 17 | 2 | 172A64-74660 | NUT, ADJUST | 1 | | | | | | | |
| 18 | 2 | 172A64-74680 | BELLOWS | 1 | | | | | | | |
| 19 | 2 | 172A64-74900 | NUT, LOCK | 1 | | | | | | | |
| 20 | 2 | 172A64-74930 | PIN, SPRING | 1 | | | | | | | |
| 21 | 2 | 24315-000200 | O-RING, 1BP20.0 | 4 | | | | | | | |
| 22 | 1 | 172A78-74650 | PLATE ASSY, VALVE | 1 | | | | | | | |
| 23 | 1 | 26013-060302 | BOLT, M6X 30 | 3 | | | | | | | |

N:Old $\overset{\text{Yes}}{\underset{\text{No}}{\leftrightarrows}}$ New, Q:Old $\overset{\text{No}}{\underset{\text{Yes}}{\leftrightarrows}}$ New, R:Old $\overset{\text{Yes}}{\underset{\text{Yes}}{\leftrightarrows}}$ New, S:Old $\overset{\text{No}}{\underset{\text{No}}{\leftrightarrows}}$ New, W:Add, Z:Discontinued, F:Interchangeable by set, K:Q'ty Change

Copyright (C) YANMAR GLOBAL CS CO., LTD. All RightsReserved.

# Fig.132. (83B)REMOTE CONTROL VALVE(LEFT)(P.T.O. HAND OPERATE SPEC.)(FROM M60544)

(A)=VIO30-6B P(KR)
(B)=
(C)=
(D)=
(E)=
(F)=

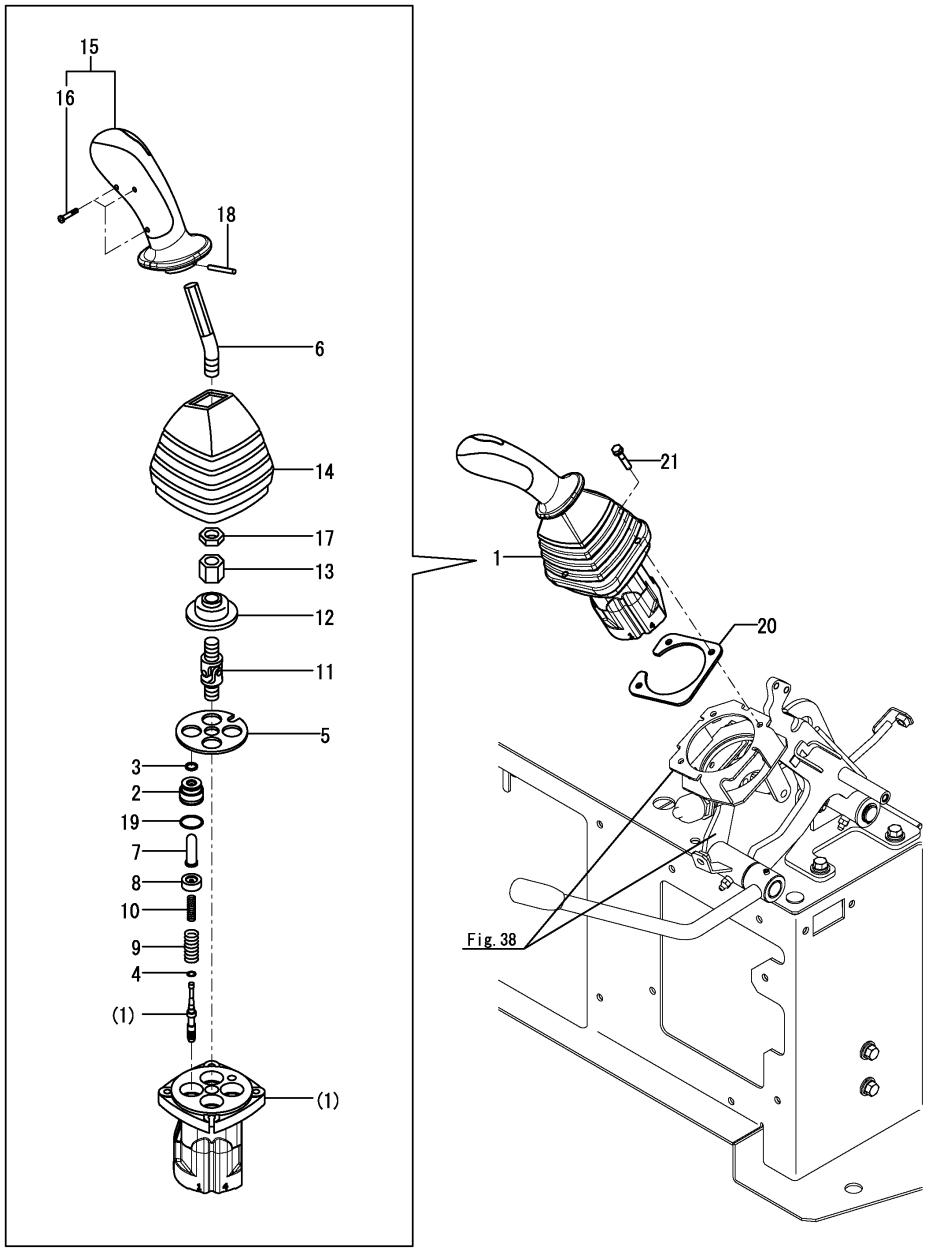


| No. | Lev. | Parts No. | Description | Q'ty (A) | (B) | (C) | (D) | (E) | (F) | I | R |
|---|---|---|---|---|---|---|---|---|---|---|---|
| 1 | 1 | 172B03-74560 | VALVE ASSY, L-N | 1 | | | | | | | |
| 2 | 2 | 172151-73400 | PLUG | 4 | | | | | | | |
| 3 | 2 | 172151-73420 | SEAL | 4 | | | | | | | |
| 4 | 2 | 172151-73450 | WASHER | 4 | | | | | | | |
| 5 | 2 | 172A64-74590 | PLATE | 1 | | | | | | | |
| 6 | 2 | 172B03-74590 | LEVER | 1 | | | | | | | |
| 7 | 2 | 172A64-74600 | ROD, PUSH | 4 | | | | | | | |
| 7-1 | 2 | 172A64-74601 | ROD, PUSH | 4 | | | | | | N | |
| | (A=MBF671) | | | | | | | | | | |
| 8 | 2 | 172A64-74610 | SEAT, SPRING | 4 | | | | | | | |
| 8-1 | 2 | 172A64-74611 | SEAT, SPRING | 4 | | | | | | N | |
| | (A=MBF671) | | | | | | | | | | |
| 9 | 2 | 172A64-74620 | SPRING | 4 | | | | | | | |
| 10 | 2 | 172A64-74630 | SPRING | 4 | | | | | | | |
| 11 | 2 | 172A64-74640 | JOINT | 1 | | | | | | | |
| 12 | 2 | 172A64-74650 | PLATE, CIRCULAR | 1 | | | | | | | |
| 13 | 2 | 172A64-74660 | NUT, ADJUST | 1 | | | | | | | |
| 14 | 2 | 172A64-74680 | BELLOWS | 1 | | | | | | | |
| 15 | 2 | 172B03-74680 | HANDLE ASSY, N | 1 | | | | | | | |
| 16 | 3 | 22853-300161 | SCREW, 3.0 X 16 | 3 | | | | | | | |
| 17 | 2 | 172A64-74900 | NUT, LOCK | 1 | | | | | | | |
| 18 | 2 | 172A64-74930 | PIN, SPRING | 1 | | | | | | | |
| 19 | 2 | 24315-000200 | O-RING, 1BP20.0 | 4 | | | | | | | |
| 20 | 1 | 172A78-74650 | PLATE ASSY, VALVE | 1 | | | | | | | |
| 21 | 1 | 26013-060302 | BOLT, M6X 30 | 3 | | | | | | | |

N:Old $\overset{\text{Yes}}{\underset{\text{No}}{\rightleftarrows}}$ New, Q:Old $\overset{\text{No}}{\underset{\text{Yes}}{\rightleftarrows}}$ New, R:Old $\overset{\text{Yes}}{\underset{\text{Yes}}{\rightleftarrows}}$ New, S:Old $\overset{\text{No}}{\underset{\text{No}}{\rightleftarrows}}$ New, W:Add, Z:Discontinued, F:Interchangeable by set, K:Q'ty Change

Copyright (C) YANMAR GLOBAL CS CO., LTD. All RightsReserved.

# Fig.84. HYD.OIL TANK



(A)=VIO30-6B P(KR)
(B)=
(C)=
(D)=
(E)=
(F)=

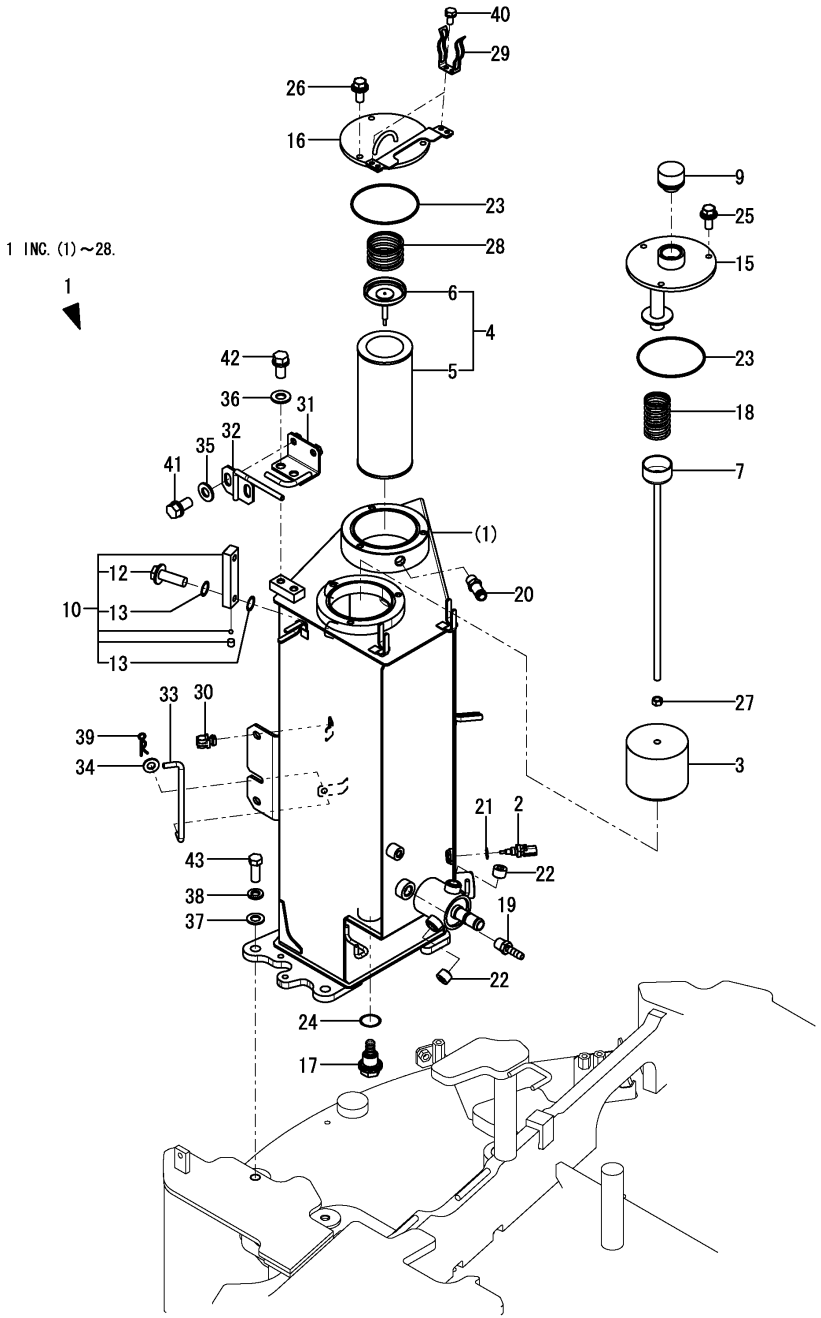


| No. | Lev. | Parts No. | Description | Q'ty (A) | (B) | (C) | (D) | (E) | (F) | I | R |
|---|---|---|---|---|---|---|---|---|---|---|---|
| 1 | 1 | 172B03-08380 | RESERVOIR KIT | 1 | | | | | | | |
| 2 | 2 | 129927-44900 | SENSOR, TEMPERATURE | 1 | | | | | | | |
| 3 | 2 | 172137-73700 | FILTER, SUCTION | 1 | | | | | | | |
| 4 | 2 | 172175-73700 | FILTER ASSY, RETURN | 1 | | | | | | | |
| 5 | 3 | 172175-73710 | ELEMENT, FILTER | 1 | | | | | | | |
| 6 | 3 | 172141-73770 | VALVE ASSY, BYPASS | 1 | | | | | | | |
| 7 | 2 | 172187-73711 | ROD ASSY, FILTER | 1 | | | | | | | |
| 9 | 2 | 172446-75250 | CAP, RESERVOIR | 1 | | | | | | | |
| 10 | 2 | 172455-75270 | GAUGE ASSY, OIL | 1 | | | | | | | |
| 12 | 3 | 172455-75290 | BOLT, OIL M10 | 2 | | | | | | | |
| 13 | 3 | 172455-75300 | O-RING | 4 | | | | | | | |
| 15 | 2 | 172B03-75400 | COVER ASSY, A | 1 | | | | | | | |
| 16 | 2 | 172B03-75450 | COVER ASSY, B | 1 | | | | | | | |
| 17 | 2 | 172187-75500 | PLUG, MAGNET 24 | 1 | | | | | | | |
| 18 | 2 | 172112-75780 | SPRING, FILTER | 1 | | | | | | | |
| 19 | 2 | 172137-76110 | NIPPLE, 3/8 | 1 | | | | | | | |
| 20 | 2 | 172637-76110 | ADAPTER, DRAIN | 1 | | | | | | | |
| 21 | 2 | 22190-120002 | WASHER, SEAL 12 | 1 | | | | | | | |
| 22 | 2 | 23871-030000 | PLUG, R03 | 2 | | | | | | | |
| 23 | 2 | 24321-001050 | O-RING, 1AG105.0 | 2 | | | | | | | |
| 24 | 2 | 24341-000300 | O-RING, 1AS30.0 | 1 | | | | | | | |
| 25 | 2 | 26014-080202 | BOLT, M8X 20 | 3 | | | | | | | |
| 26 | 2 | 26014-080202 | BOLT, M8X 20 | 3 | | | | | | | |
| 27 | 2 | 26716-100002 | NUT, M10 | 1 | | | | | | | |
| 28 | 2 | 933152-02710 | SPRING, CLUTCH | 1 | | | | | | | |
| 29 | 1 | 172122-55061 | PLATE, GREASE PUMP | 2 | | | | | | | |
| 30 | 1 | 1A7400-61250 | HOLDER, ROD 8 | 1 | | | | | | | |
| 31 | 1 | 172B03-61850 | LOCK ASSY, COVER B | 1 | | | | | | | |
| 32 | 1 | 172B03-61870 | CATCH ASSY, COVER B | 1 | | | | | | | |
| 33 | 1 | 172B03-65780 | HOOK, BONNET R | 1 | | | | | | | |
| 34 | 1 | 22137-080000 | WASHER, 8 | 1 | | | | | | | |
| 35 | 1 | 22137-100000 | WASHER, 10 | 2 | | | | | | | |
| 36 | 1 | 22137-100000 | WASHER, 10 | 2 | | | | | | | |
| 37 | 1 | 22137-140000 | WASHER, 14 | 3 | | | | | | | |
| 38 | 1 | 22217-140000 | WASHER, SPRING 14 | 3 | | | | | | | |
| 39 | 1 | 22372-080000 | PIN, SNAP 8 | 1 | | | | | | | |
| 40 | 1 | 26013-060122 | BOLT, M6X 12 | 4 | | | | | | | |
| 41 | 1 | 26013-100202 | BOLT, M10X 20 | 2 | | | | | | | |
| 42 | 1 | 26013-100202 | BOLT, M10X 20 | 2 | | | | | | | |
| 43 | 1 | 26116-140352 | BOLT, M14X 35 PLATED | 3 | | | | | | | |

N:Old ◄Yes/No► New, Q:Old ◄No/Yes► New, R:Old ◄Yes/Yes► New, S:Old ◄No/No► New, W:Add, Z:Discontinued, F:Interchangeable by set, K:Q'ty Change

Copyright (C) YANMAR GLOBAL CS CO., LTD. All RightsReserved.

# Fig.100. QUICK COUPLER(HITCH CYLINDER)



(A)=VIO30-6B P(KR)
(B)=
(C)=
(D)=
(E)=
(F)=

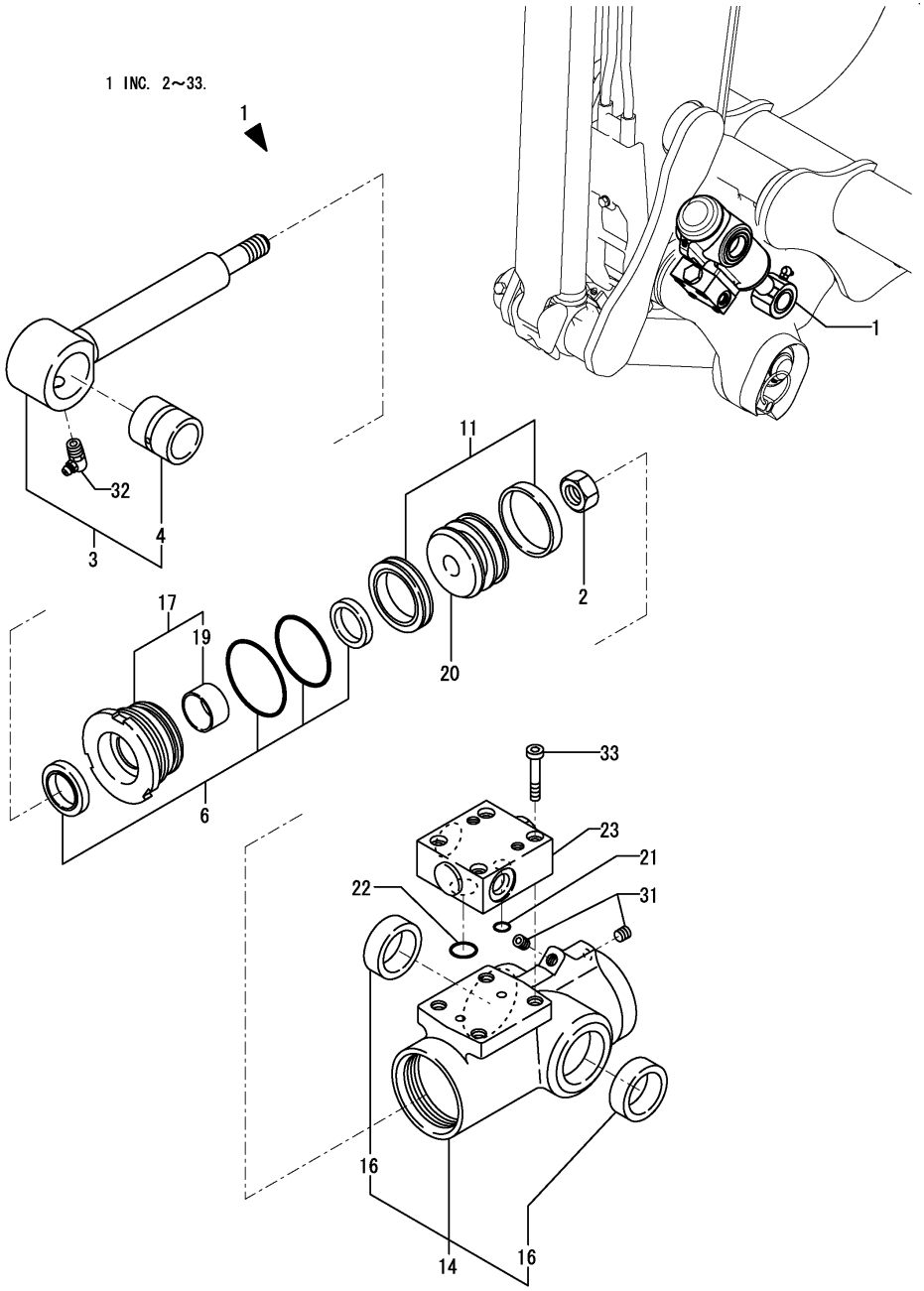


| No. | Lev. | Parts No. | Description | Q'ty (A) | (B) | (C) | (D) | (E) | (F) | I | R |
|---|---|---|---|---|---|---|---|---|---|---|---|
| 1 | 1 | 172958-72801-N | CYLINDER ASSY, HITCH | 1 | | | | | | | |
| 2 | 2 | 172156-72400 | U-NUT, M14 | 1 | | | | | | | |
| 3 | 2 | 172958-72750 | ROD ASSY, HITCH | 1 | | | | | | | |
| 4 | 3 | 172156-72770 | BUSH, PIN 25 35 B | 1 | | | | | | | |
| 6 | 2 | 172958-72760 | SEAL SET, HEAD 50X25 | 1 | | | | | | | |
| 11 | 2 | 172958-72770 | SEAL SET,PISTON 50-2 | 1 | | | | | | | |
| 14 | 2 | 172958-72811-N | TUBE ASSY, HITCH | 1 | | | | | | | |
| 16 | 3 | 172958-72970 | BUSH, 30-40-13 | 2 | | | | | | | |
| 17 | 2 | 172958-72860 | HEAD ASSY, 50 25 | 1 | | | | | | | |
| 19 | 3 | 24550-025150 | BUSH, 25X15 | 1 | | | | | | | |
| 20 | 2 | 172958-72890 | PISTON, 50 25 | 1 | | | | | | | |
| 21 | 2 | 172958-72950 | O-RING, P8 | 1 | | | | | | | |
| 22 | 2 | 172958-72960 | O-RING, P14 | 1 | | | | | | | |
| 23 | 2 | 172958-72983-N | VALVE ASSY, OPERATE | 1 | | | | | | | |
| 31 | 2 | 23871-005000 | PLUG, R005 | 2 | | | | | | | |
| 32 | 2 | 24761-050000 | NIPPLE, GREASE C | 1 | | | | | | | |
| 33 | 2 | 26450-060302 | BOLT, M6X 30 | 4 | | | | | | | |

N:Old $\overset{\text{Yes}}{\underset{\text{No}}{\rightleftarrows}}$ New, Q:Old $\overset{\text{No}}{\underset{\text{Yes}}{\rightleftarrows}}$ New, R:Old $\overset{\text{Yes}}{\underset{\text{Yes}}{\rightleftarrows}}$ New, S:Old $\overset{\text{No}}{\underset{\text{No}}{\rightleftarrows}}$ New, W:Add, Z:Discontinued, F:Interchangeable by set, K:Q'ty Change

Copyright (C) YANMAR GLOBAL CS CO., LTD. All RightsReserved.

# Fig.135. SOLENOID VALVE(P.T.O. HAND OPERATE SPEC.)(FROM M60544)

(A)=VIO30-6B P(KR)
(B)=
(C)=
(D)=
(E)=
(F)=

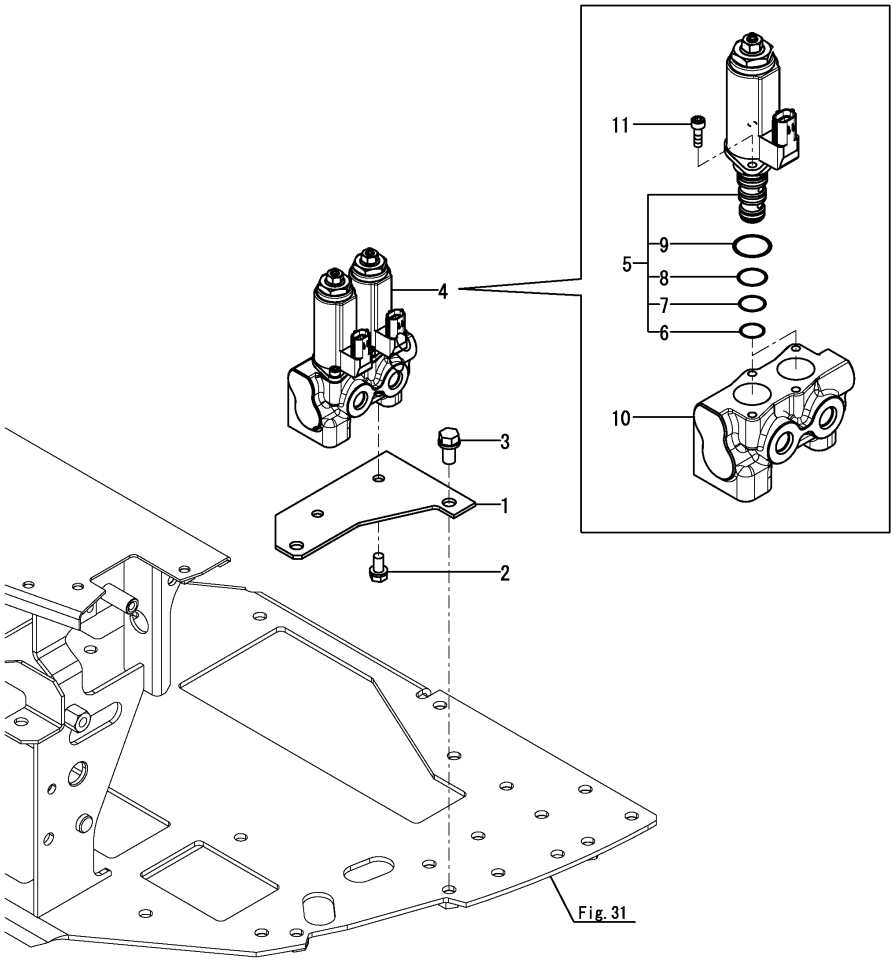


| No. | Lev. | Parts No. | Description | Q'ty (A) | (B) | (C) | (D) | (E) | (F) | I | R |
|---|---|---|---|---|---|---|---|---|---|---|---|
| 1 | 1 | 172B03-74930 | STAY, SOLENOID 2 K | 1 | | | | | | | |
| 2 | 1 | 26013-080162 | BOLT, M8X 16 | 2 | | | | | | | |
| 3 | 1 | 26013-100202 | BOLT, M10X 20 | 2 | | | | | | | |
| 4 | 1 | 172B03-74720 | VALVE ASSY, PP | 1 | | | | | | | |
| 5 | 2 | 172B03-74750 | CARTRIDGE ASSY,P1.6A | 2 | | | | | | | |
| 6 | 3 | 172B03-74860 | O-RING, 1B AS 013 | 2 | | | | | | | |
| 7 | 3 | 172B03-74870 | O-RING, 1B AS 014 | 2 | | | | | | | |
| 8 | 3 | 172B03-74880 | O-RING, 1B AS 015 | 2 | | | | | | | |
| 9 | 3 | 24315-000200 | O-RING, 1BP20.0 | 2 | | | | | | | |
| 10 | 2 | 172B03-74770 | BLOCK, 2 | 2 | | | | | | | |
| 11 | 2 | 172B03-74790 | BOLT, 10.9 M5X12 | 4 | | | | | | | |
| 11-1 | 2 | 172B05-74730 | BOLT, SOCKET M5X12 | 4 | | | | | | N | |

(A=*2016.06.)

N:Old $\overset{\text{Yes}}{\underset{\text{No}}{\rightleftarrows}}$ New, Q:Old $\overset{\text{No}}{\underset{\text{Yes}}{\rightleftarrows}}$ New, R:Old $\overset{\text{Yes}}{\underset{\text{Yes}}{\rightleftarrows}}$ New, S:Old $\overset{\text{No}}{\underset{\text{No}}{\rightleftarrows}}$ New, W:Add, Z:Discontinued, F:Interchangeable by set, K:Q'ty Change

Copyright (C) YANMAR GLOBAL CS CO., LTD. All RightsReserved.

# Fig.85. HYD. OIL PIPING(TANK - PUMP, CONTROL VALVE)

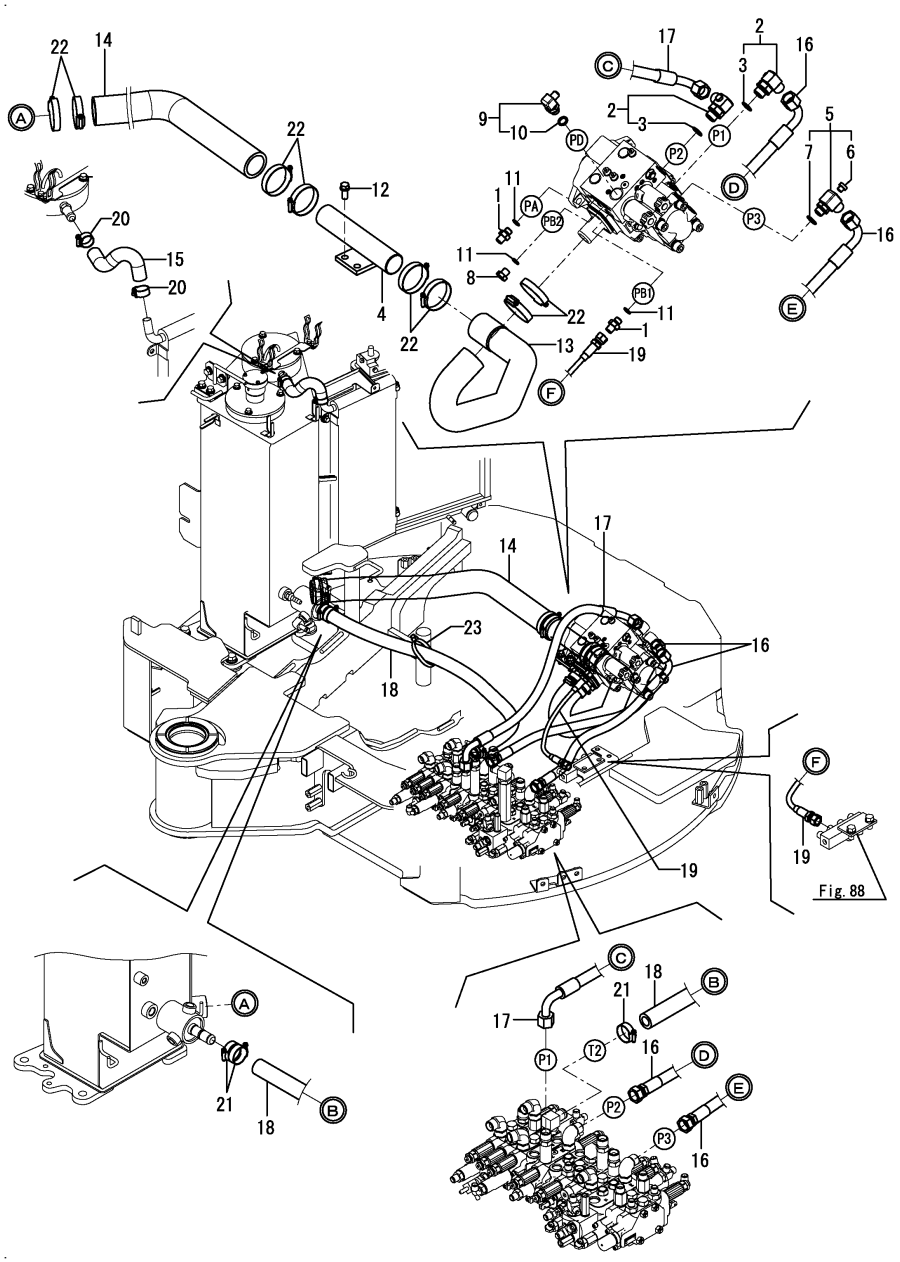


(A)=VIO30-6B P(KR)
(B)=
(C)=
(D)=
(E)=
(F)=

| No. | Lev. | Parts No. | Description | Q'ty (A) | (B) | (C) | (D) | (E) | (F) | I | R |
|---|---|---|---|---|---|---|---|---|---|---|---|
| 1 | 1 | 172123-76121 | ADAPTER, M/M PF1/4 | 2 | | | | | | | |
| 2 | 1 | 172A47-76151 | ELBOW, 90 G1/2-G1/2 | 2 | | | | | | | |
| 3 | 2 | 41851-000180 | O-RING, P 18.0 HNBR | 2 | | | | | | | |
| 4 | 1 | 172444-76400 | TUBE ASSY, SUCTION | 1 | | | | | | | |
| 5 | 1 | 172A25-76570 | CONNECTOR ASSY | 1 | | | | | | | |
| 6 | 2 | 172460-76570 | PLUG, SCREW | 1 | | | | | | | |
| 7 | 2 | 24315-000140 | O-RING, 1BP14.0 | 1 | | | | | | | |
| 8 | 1 | 172165-76590 | PLUG, HEXAGON | 1 | | | | | | | |
| 9 | 1 | 172141-76920 | CONNECTOR ASSY | 1 | | | | | | | |
| 10 | 2 | 24315-000140 | O-RING, 1BP14.0 | 1 | | | | | | | |
| 11 | 1 | 41851-000110 | O-RING, P11.0 HNBR | 3 | | | | | | | |
| 12 | 1 | 26013-100252 | BOLT, M10X 25 | 2 | | | | | | | |
| 13 | 1 | 172B02-78100 | HOSE, SUCTION A | 1 | | | | | | | |
| 14 | 1 | 172B03-78110 | HOSE, SUCTION B | 1 | | | | | | | |
| 15 | 1 | 172B03-78120 | HOSE, 15.9X25.9 | 1 | | | | | | | |
| 16 | 1 | 172B03-78130 | HOSE, H208BC057S | 2 | | | | | | | |
| 17 | 1 | 172B02-78140 | HOSE, H208CC065S | 1 | | | | | | | |
| 18 | 1 | 172B03-78310 | HOSE, G612YY090S | 1 | | | | | | | |
| 19 | 1 | 172B03-78600 | HOSE, F403BB042S | 1 | | | | | | | |
| 20 | 1 | 23001-025000 | CLAMP, HOSE 25 | 2 | | | | | | | |
| 21 | 1 | 23001-035000 | CLAMP, HOSE 35 | 2 | | | | | | | |
| 21-1 | 1 | 23001-035000 | CLAMP, HOSE 35 | 3 | | | | | | K | |
| | (A=MXXXXX) | | | | | | | | | | |
| 22 | 1 | 23001-060000 | CLAMP, HOSE 60 | 8 | | | | | | | |
| 23 | 1 | 172126-11510 | BAND, BINDING 300 | 1 | | | | | | W | |
| | (A=*2014.02) | | | | | | | | | | |

Remarks
* Fitting(control valve) is shown in Fig.87 & 88.

N:Old $\overset{\text{Yes}}{\underset{\text{No}}{\rightleftarrows}}$ New, Q:Old $\overset{\text{No}}{\underset{\text{Yes}}{\rightleftarrows}}$ New, R:Old $\overset{\text{Yes}}{\underset{\text{Yes}}{\rightleftarrows}}$ New, S:Old $\overset{\text{No}}{\underset{\text{No}}{\rightleftarrows}}$ New, W:Add, Z:Discontinued, F:Interchangeable by set, K:Q'ty Change

Copyright (C) YANMAR GLOBAL CS CO., LTD. All RightsReserved.

# Fig.86. HYD.OIL PIPING(CONTROL VALVE - TURNING MOTOR)

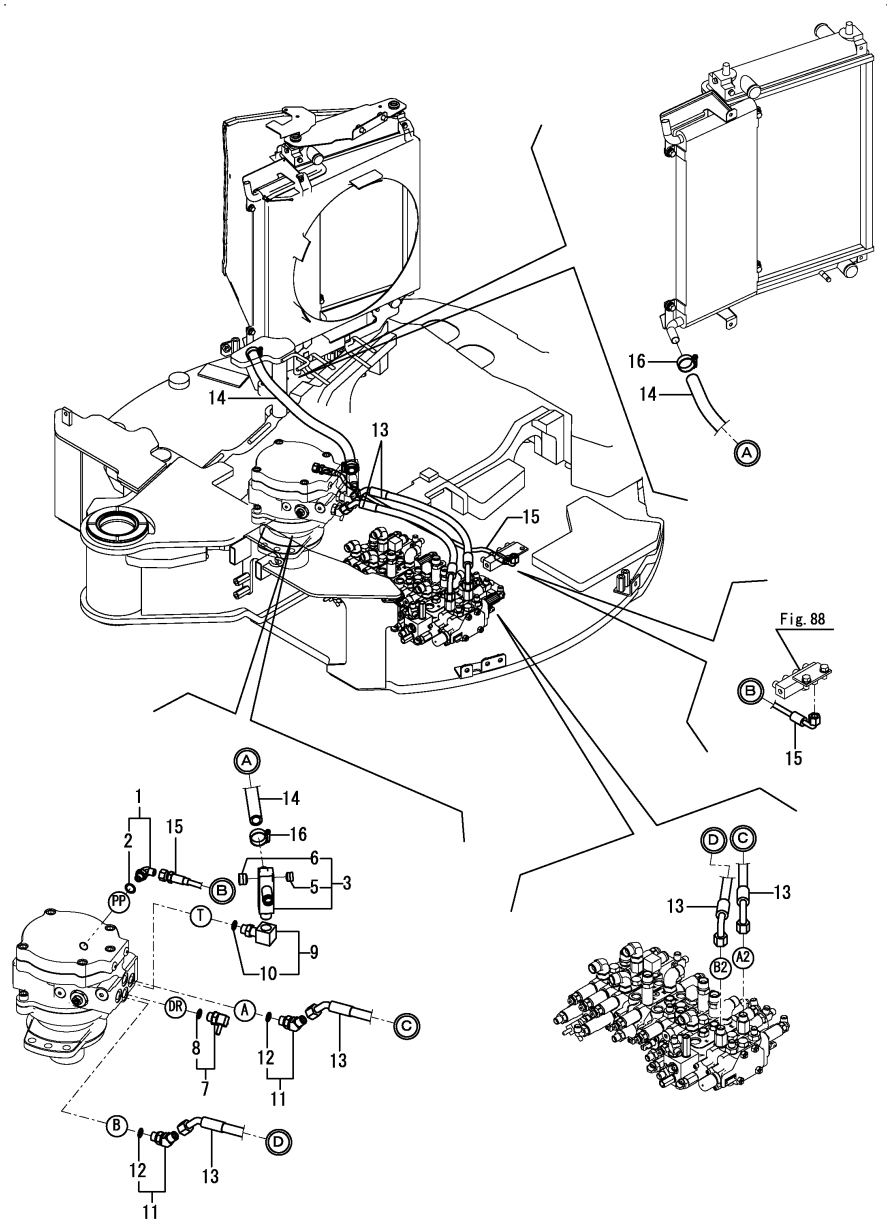


(A)=VIO30-6B P(KR)
(B)=
(C)=
(D)=
(E)=
(F)=

| No. | Lev. | Parts No. | Description | Q'ty (A) | (B) | (C) | (D) | (E) | (F) | I | R |
|---|---|---|---|---|---|---|---|---|---|---|---|
| 1 | 1 | 172B03-76010 | ELBOW, G1/4 | 1 | | | | | | | |
| 2 | 2 | 41851-000110 | O-RING, P11.0 HNBR | 1 | | | | | | | |
| 3 | 1 | 172B03-76090 | CONNECTOR ASSY,TR1/2 | 1 | | | | | | | |
| 5 | 2 | 23871-030000 | PLUG, R03 | 1 | | | | | | | |
| 6 | 2 | 23871-040000 | PLUG, R04 | 1 | | | | | | | |
| 7 | 1 | 172A52-76110 | NIPPLE, TEE G3/8 | 1 | | | | | | | |
| 8 | 2 | 24315-000140 | O-RING, 1BP14.0 | 1 | | | | | | | |
| 9 | 1 | 172458-76160 | ELBOW, PF3/8-PT1/2 | 1 | | | | | | | |
| 10 | 2 | 24315-000140 | O-RING, 1BP14.0 | 1 | | | | | | | |
| 11 | 1 | 172644-76161 | ELBOW, ADJUST 45 | 2 | | | | | | | |
| 12 | 2 | 24315-000140 | O-RING, 1BP14.0 | 2 | | | | | | | |
| 13 | 1 | 172B02-78260 | HOSE, F206CE052 | 2 | | | | | | | |
| 14 | 1 | 172B03-78510 | HOSE, G610YY057S | 1 | | | | | | | |
| 15 | 1 | 172B03-78610 | HOSE, F403BC070S | 1 | | | | | | | |
| 16 | 1 | 23001-035000 | CLAMP, HOSE 35 | 2 | | | | | | | |

Remarks
* Fitting(control valve) is shown in Fig.87,88.

N:Old $\overset{\text{Yes}}{\underset{\text{No}}{\rightleftarrows}}$ New, Q:Old $\overset{\text{No}}{\underset{\text{Yes}}{\rightleftarrows}}$ New, R:Old $\overset{\text{Yes}}{\underset{\text{Yes}}{\rightleftarrows}}$ New, S:Old $\overset{\text{No}}{\underset{\text{No}}{\rightleftarrows}}$ New, W:Add, Z:Discontinued, F:Interchangeable by set, K:Q'ty Change

Copyright (C) YANMAR GLOBAL CS CO., LTD. All RightsReserved.

# Fig.87. HYD.OIL PIPING(CONTROL VALVE : FITTING, 1)

(A)=VIO30-6B P(KR)
(B)=
(C)=
(D)=
(E)=
(F)=

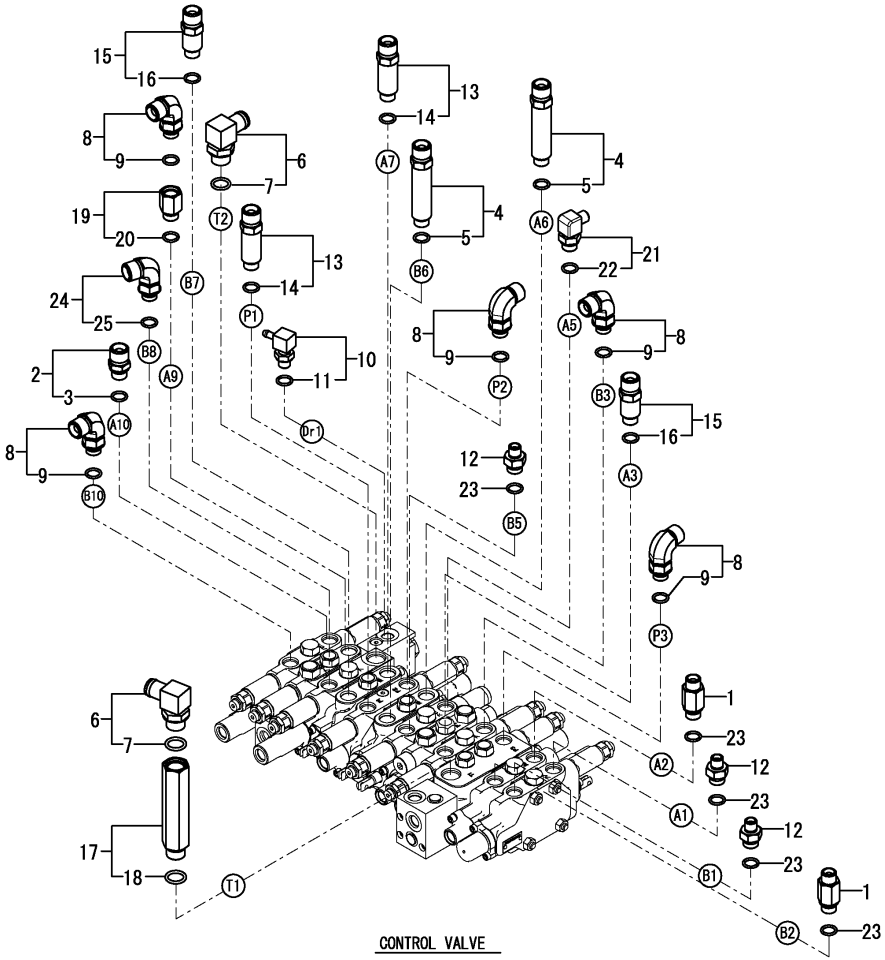


| No. | Lev. | Parts No. | Description | Q'ty (A) | (B) | (C) | (D) | (E) | (F) | I | R |
|---|---|---|---|---|---|---|---|---|---|---|---|
| 1 | 1 | 172B03-76070 | CONNECTOR, G3/8X3/8 | 2 | | | | | | | |
| 2 | 1 | 172B03-76110 | CONNECTOR, G1/2X3/8 | 1 | | | | | | | |
| 3 | 2 | 41851-000140 | O-RING, P 14.0 HNBR | 1 | | | | | | | |
| 4 | 1 | 172B03-76120 | CONNECTOR,G1/2X3/8 L | 2 | | | | | | | |
| 5 | 2 | 41851-000140 | O-RING, P 14.0 HNBR | 2 | | | | | | | |
| 6 | 1 | 172164-76131 | ELBOW, 90 3/4-1/2 | 2 | | | | | | | |
| 7 | 2 | 24315-000180 | O-RING, 1BP18.0 | 2 | | | | | | | |
| 8 | 1 | 172B03-76130 | ELBOW, G1/2-3/8 | 5 | | | | | | | |
| 9 | 2 | 41851-000140 | O-RING, P 14.0 HNBR | 5 | | | | | | | |
| 10 | 1 | 172458-76150 | NIPPLE, ELBOW PF1/4 | 1 | | | | | | | |
| 11 | 2 | 24315-000110 | O-RING, 1BP11.0 | 1 | | | | | | | |
| 12 | 1 | 172124-76160 | CONNECTOR | 3 | | | | | | | |
| 13 | 1 | 172B03-76160 | CONNECTOR,G1/2X3/8 M | 2 | | | | | | | |
| 14 | 2 | 41851-000140 | O-RING, P 14.0 HNBR | 2 | | | | | | | |
| 15 | 1 | 172B03-76170 | CONNECTOR,G1/2X3/8 S | 2 | | | | | | | |
| 16 | 2 | 41851-000140 | O-RING, P 14.0 HNBR | 2 | | | | | | | |
| 17 | 1 | 172B03-76190 | ADAPTER, G1/2 | 1 | | | | | | | |
| 18 | 2 | 41851-000180 | O-RING, P 18.0 HNBR | 1 | | | | | | | |
| 19 | 1 | 172B03-76630 | ADAPTER, G3/8 | 1 | | | | | | | |
| 20 | 2 | 41851-000140 | O-RING, P 14.0 HNBR | 1 | | | | | | | |
| 21 | 1 | 172141-76920 | CONNECTOR ASSY | 1 | | | | | | | |
| 22 | 2 | 24315-000140 | O-RING, 1BP14.0 | 1 | | | | | | | |
| 23 | 1 | 41851-000140 | O-RING, P 14.0 HNBR | 5 | | | | | | | |
| 24 | 1 | 172B03-76130 | ELBOW, G1/2-3/8 | 1 | | | | | | | |
| 25 | 2 | 41851-000140 | O-RING, P 14.0 HNBR | 1 | | | | | | | |

N:Old $\overset{\text{Yes}}{\underset{\text{No}}{\leftrightarrows}}$ New, Q:Old $\overset{\text{No}}{\underset{\text{Yes}}{\leftrightarrows}}$ New, R:Old $\overset{\text{Yes}}{\underset{\text{Yes}}{\leftrightarrows}}$ New, S:Old $\overset{\text{No}}{\underset{\text{No}}{\leftrightarrows}}$ New, W:Add, Z:Discontinued, F:Interchangeable by set, K:Q'ty Change

Copyright (C) YANMAR GLOBAL CS CO., LTD. All RightsReserved.

# Fig.88. HYD.OIL PIPING(CONTROL VALVE : FITTING, 2)

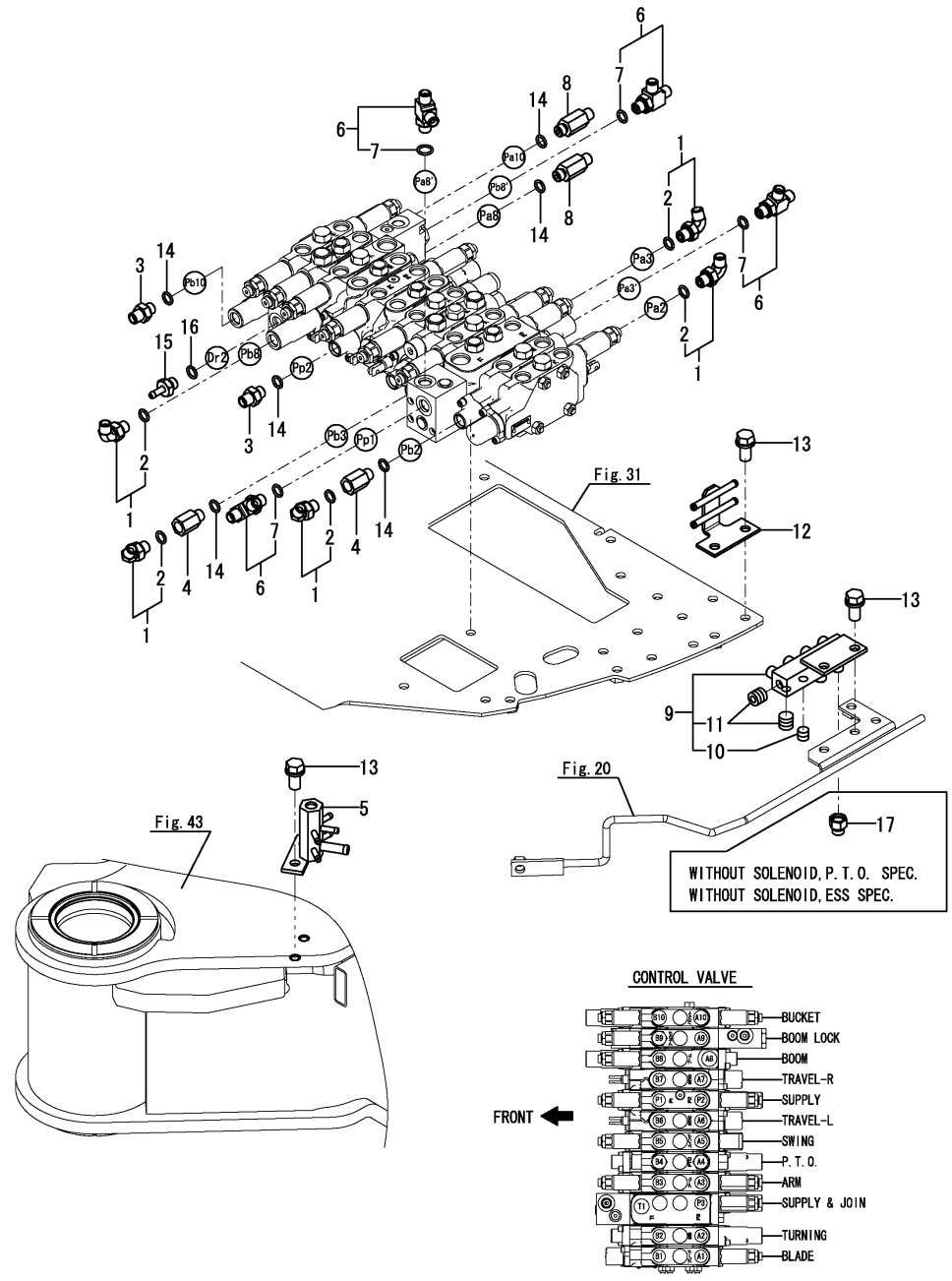


(A)=VIO30-6B P(KR)
(B)=
(C)=
(D)=
(E)=
(F)=

| No. | Lev. | Parts No. | Description | Q'ty (A) | (B) | (C) | (D) | (E) | (F) | I | R |
|---|---|---|---|---|---|---|---|---|---|---|---|
| 1 | 1 | 172B03-76010 | ELBOW, G1/4 | 5 | | | | | | | |
| 2 | 2 | 41851-000110 | O-RING, P11.0 HNBR | 5 | | | | | | | |
| 3 | 1 | 172123-76121 | ADAPTER, M/M PF1/4 | 2 | | | | | | | |
| 4 | 1 | 172422-76140 | CONNECTOR, PF1/4 | 2 | | | | | | | |
| 5 | 1 | 172445-76153 | BLOCK, DRAIN | 1 | | | | | | | |
| 6 | 1 | 172162-76181 | JOINT ASSY, 1/4 T | 4 | | | | | | | |
| 7 | 2 | 41851-000110 | O-RING, P11.0 HNBR | 4 | | | | | | | |
| 8 | 1 | 172183-76200 | CONNECTOR, 1/4-1/4 | 2 | | | | | | | |
| 9 | 1 | 172A47-76310 | BLOCK, PILOT | 1 | | | | | | | |
| 10 | 2 | 23871-010000 | PLUG, R01 | 1 | | | | | | | |
| 11 | 2 | 23871-020000 | PLUG, R02 | 2 | | | | | | | |
| 12 | 1 | 172B03-76310 | CONNECTOR ASSY | 1 | | | | | | | |
| 13 | 1 | 26013-100202 | BOLT, M10X 20 | 6 | | | | | | | |
| 14 | 1 | 41851-000110 | O-RING, P11.0 HNBR | 6 | | | | | | | |
| 15 | 1 | 172B03-76080 | NIPPLE, G1/4 | 1 | | | | | | | |
| 16 | 1 | 41851-000110 | O-RING, P11.0 HNBR | 1 | | | | | | | |
| 17 | 1 | 1E3030-78370 | CAP, SCREW | 1 | | | | | | W | |
| | (A=MXXXXX) | | | | | | | | | | |



Copyright (C) YANMAR GLOBAL CS CO., LTD. All RightsReserved.

# Fig.89. HYD. OIL PIPING(CONTROL VALVE - RETURN, DRAIN)

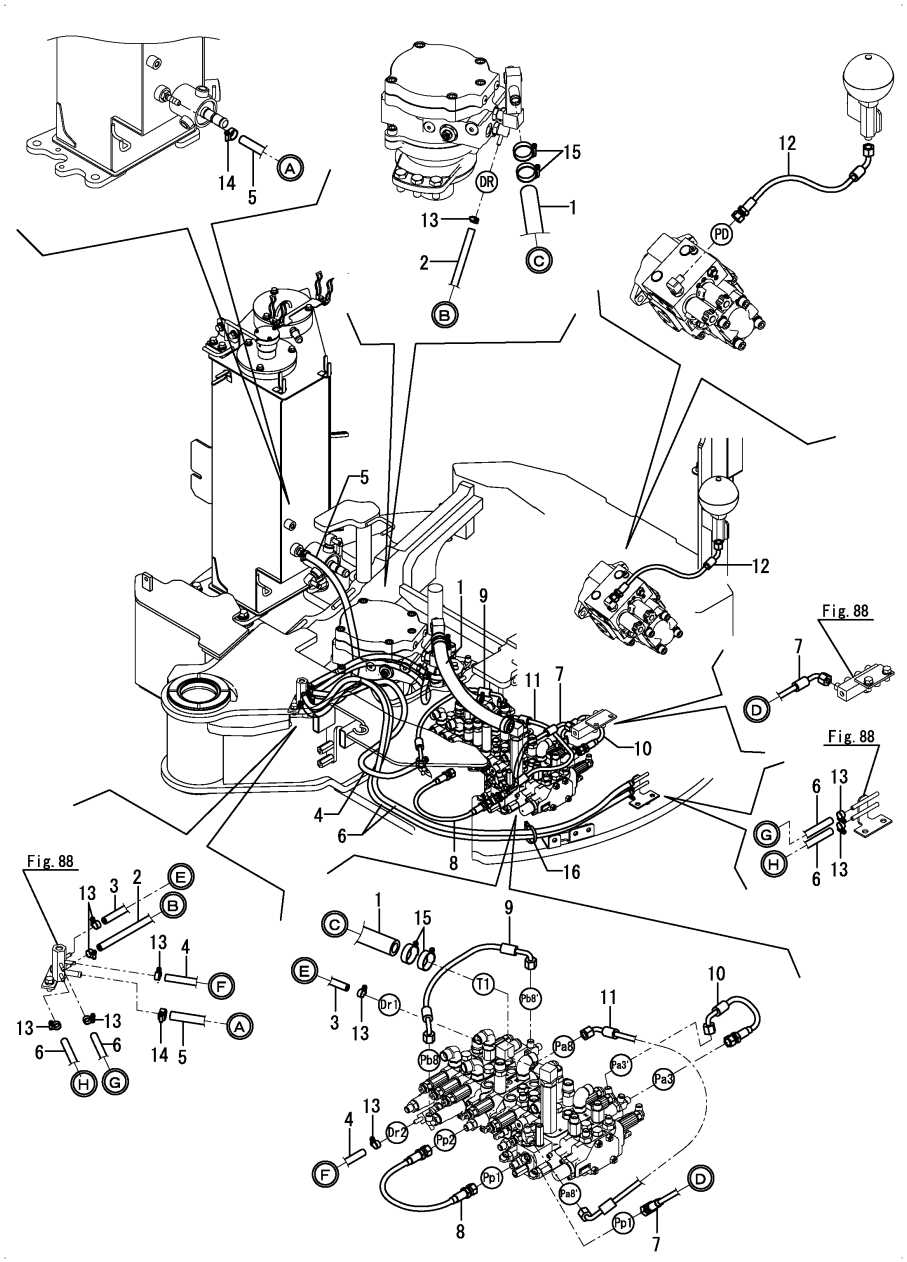


(A)=VIO30-6B P(KR)
(B)=
(C)=
(D)=
(E)=
(F)=

| No. | Lev. | Parts No. | Description | Q'ty (A) | (B) | (C) | (D) | (E) | (F) | I | R |
|---|---|---|---|---|---|---|---|---|---|---|---|
| 1 | 1 | 172B03-78300 | HOSE, G612YY045 | 1 | | | | | | | |
| 2 | 1 | 172B03-78530 | HOSE, G804YY061S | 1 | | | | | | | |
| 3 | 1 | 172B03-78540 | HOSE, G804YY058S | 1 | | | | | | | |
| 4 | 1 | 172B03-78550 | HOSE, G804YY071S | 1 | | | | | | | |
| 5 | 1 | 172B03-78560 | HOSE, G806YY060S | 1 | | | | | | | |
| 6 | 1 | 172B03-78570 | HOSE, G804YY143S | 2 | | | | | | | |
| 7 | 1 | 172B03-78620 | HOSE, F403BC032S | 1 | | | | | | | |
| 8 | 1 | 172B03-78640 | HOSE, F403BB041S | 1 | | | | | | | |
| 9 | 1 | 172B03-78650 | HOSE, F403CC040S | 1 | | | | | | | |
| 10 | 1 | 172B03-78700 | HOSE, F403BC023S | 1 | | | | | | | |
| 11 | 1 | 172B03-78720 | HOSE, F403CC056 | 1 | | | | | | | |
| 12 | 1 | 172B03-78760 | HOSE, F403BC035 | 1 | | | | | | | |
| 13 | 1 | 23000-013000 | CLAMP, 13 | 10 | | | | | | | |
| 14 | 1 | 23001-019000 | CLAMP, HOSE 19 | 2 | | | | | | | |
| 15 | 1 | 23001-035000 | CLAMP, HOSE 35 | 2 | | | | | | | |
| 15-1 | 1 | 23001-035000 | CLAMP, HOSE 35 | 3 | | | | | | K | |
| | (A=*2014.02.) | | | | | | | | | | |
| 16 | 1 | 194202-56460 | BAND, BINDING 200 | 1 | | | | | | W | |
| | (A=*2017.10.) | | | | | | | | | | |

Remarks
* Fitting(control valve) is shown in Fig.87 & 88.

N:Old $\overset{\text{Yes}}{\underset{\text{No}}{\leftrightarrows}}$ New, Q:Old $\overset{\text{No}}{\underset{\text{Yes}}{\leftrightarrows}}$ New, R:Old $\overset{\text{Yes}}{\underset{\text{Yes}}{\leftrightarrows}}$ New, S:Old $\overset{\text{No}}{\underset{\text{No}}{\leftrightarrows}}$ New, W:Add, Z:Discontinued, F:Interchangeable by set, K:Q'ty Change

Copyright (C) YANMAR GLOBAL CS CO., LTD. All RightsReserved.

# Fig.90. HYD.OIL PIPING(CONTROL VALVE - BOOM BULKHEAD, SWING)

(A)=VIO30-6B P(KR)
(B)=
(C)=
(D)=
(E)=
(F)=

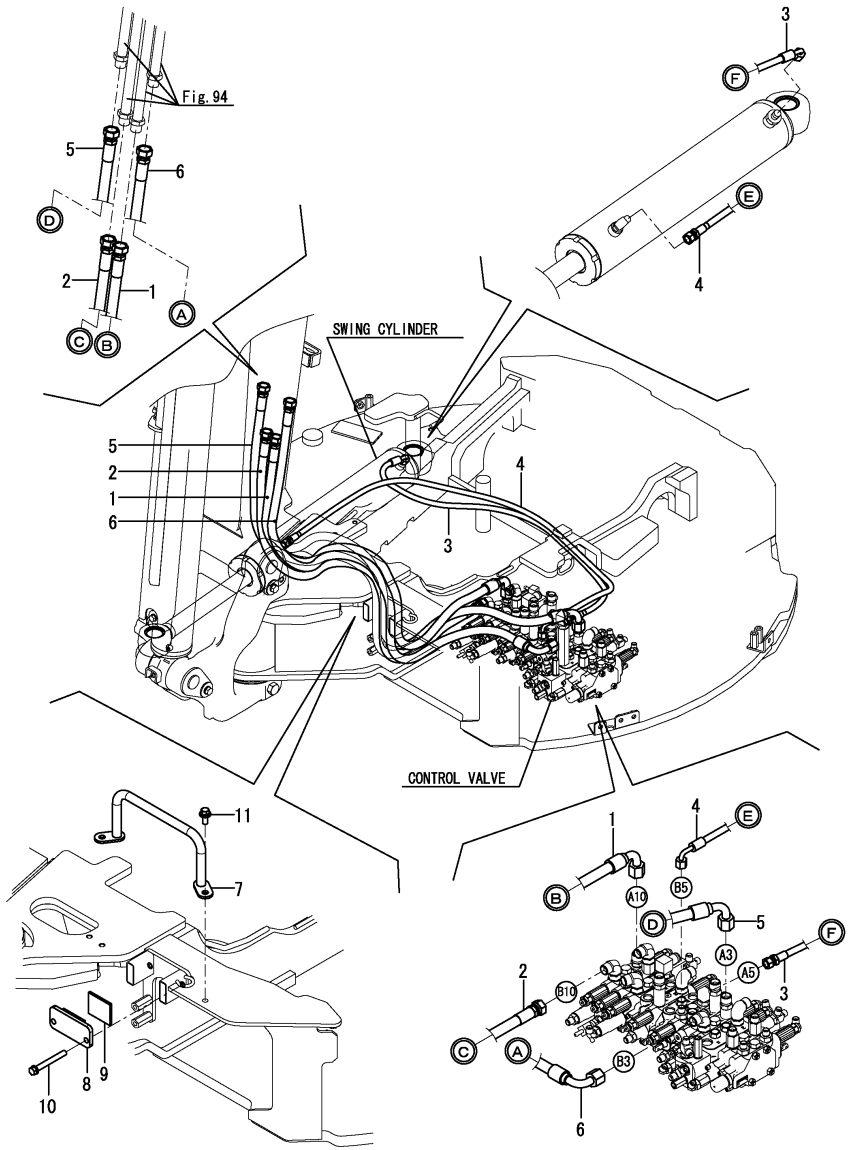


| No. | Lev. | Parts No. | Description | Q'ty (A) | (B) | (C) | (D) | (E) | (F) | I | R |
|---|---|---|---|---|---|---|---|---|---|---|---|
| 1 | 1 | 172B03-78160 | HOSE, H208BC135K | 1 | | | | | | | |
| 2 | 1 | 172B03-78170 | HOSE, H208BB130K | 1 | | | | | | | |
| 3 | 1 | 172B03-78220 | HOSE, F204BC105S | 1 | | | | | | | |
| 4 | 1 | 172B03-78230 | HOSE, F204BC137S | 1 | | | | | | | |
| 5 | 1 | 172B03-78240 | HOSE, H208BC158K | 1 | | | | | | | |
| 6 | 1 | 172B03-78250 | HOSE, H208BC155K | 1 | | | | | | | |
| 7 | 1 | 172B03-79720 | GUIDE ASSY, HOSE | 1 | | | | | | | |
| 8 | 1 | 172B03-79950 | PLATE ASSY, HOSE | 1 | | | | | | | |
| 9 | 1 | 172B03-79970 | CLAMP, HOSE | 1 | | | | | | | |
| 10 | 1 | 26013-100852 | BOLT, M10X 85 | 2 | | | | | | | |
| 11 | 1 | 26014-100252 | BOLT, M10X 25 | 2 | | | | | | | |

Remarks
* Fitting(control valve) is shown in Fig.87,88.

N:Old $\overset{\text{Yes}}{\underset{\text{No}}{\leftrightarrows}}$ New, Q:Old $\overset{\text{No}}{\underset{\text{Yes}}{\leftrightarrows}}$ New, R:Old $\overset{\text{Yes}}{\underset{\text{Yes}}{\leftrightarrows}}$ New, S:Old $\overset{\text{No}}{\underset{\text{No}}{\leftrightarrows}}$ New, W:Add, Z:Discontinued, F:Interchangeable by set, K:Q'ty Change

Copyright (C) YANMAR GLOBAL CS CO., LTD. All RightsReserved.

# Fig.91. HYD.OIL PIPING(CONTROL VALVE - BOOM CYLINDER)

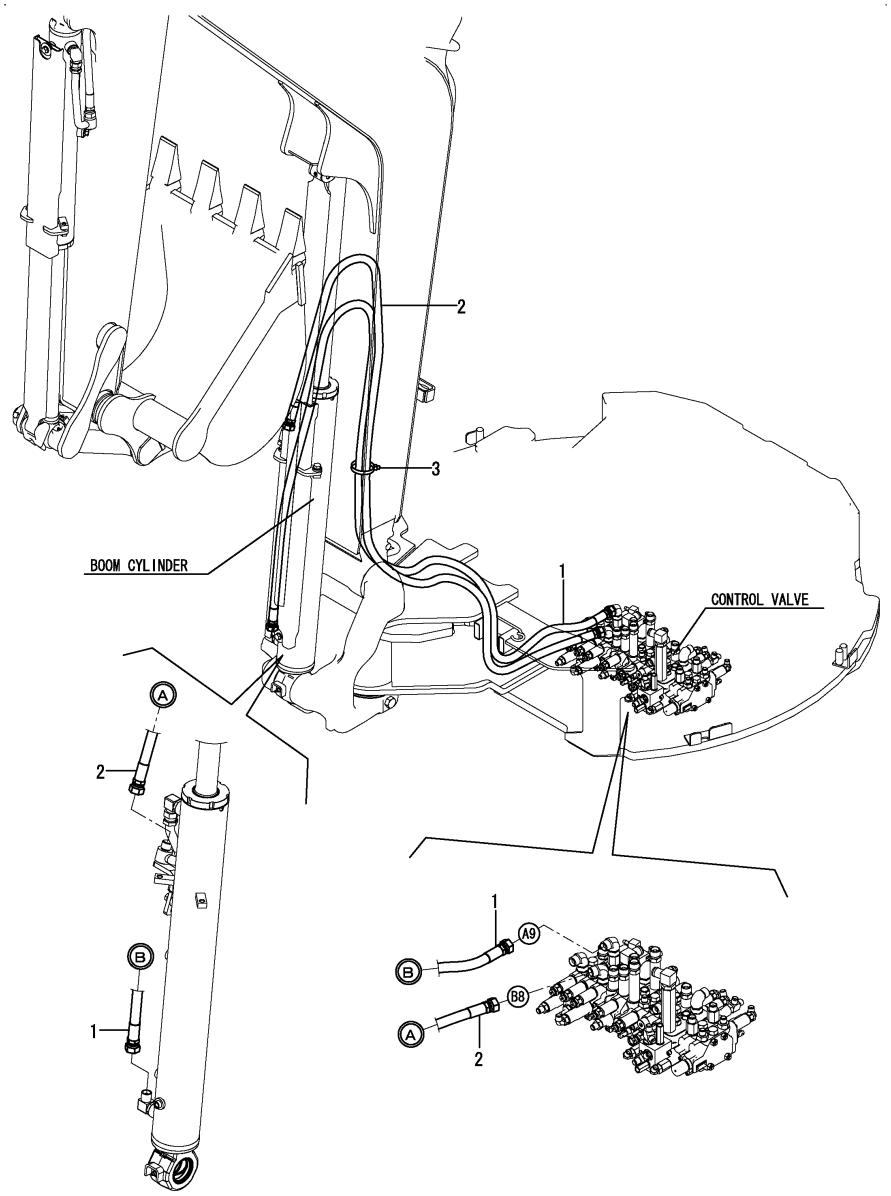


(A)=VIO30-6B P(KR)
(B)=
(C)=
(D)=
(E)=
(F)=

| No. | Lev. | Parts No. | Description | Q'ty (A) | (B) | (C) | (D) | (E) | (F) | I | R |
|---|---|---|---|---|---|---|---|---|---|---|---|
| 1 | 1 | 172B03-78180 | HOSE, H208BB296K | 1 | | | | | | | |
| 2 | 1 | 172B03-78190 | HOSE, H208BB251K | 1 | | | | | | | |
| 3 | 1 | 172122-79890 | CLAMP, HOSE 350 | 1 | | | | | | W | |
| | | (A=MZZZZZ) | | | | | | | | | |

Remarks
* Fitting(control valve) is shown in Fig.87,88.

N:Old $\overset{\text{Yes}}{\underset{\text{No}}{\leftrightarrows}}$ New, Q:Old $\overset{\text{No}}{\underset{\text{Yes}}{\leftrightarrows}}$ New, R:Old $\overset{\text{Yes}}{\underset{\text{Yes}}{\leftrightarrows}}$ New, S:Old $\overset{\text{No}}{\underset{\text{No}}{\leftrightarrows}}$ New, W:Add, Z:Discontinued, F:Interchangeable by set, K:Q'ty Change

Copyright (C) YANMAR GLOBAL CS CO., LTD. All RightsReserved.

# Fig.92. HYD.OIL PIPING(CONTROL VALVE - SWIVEL JOINT)

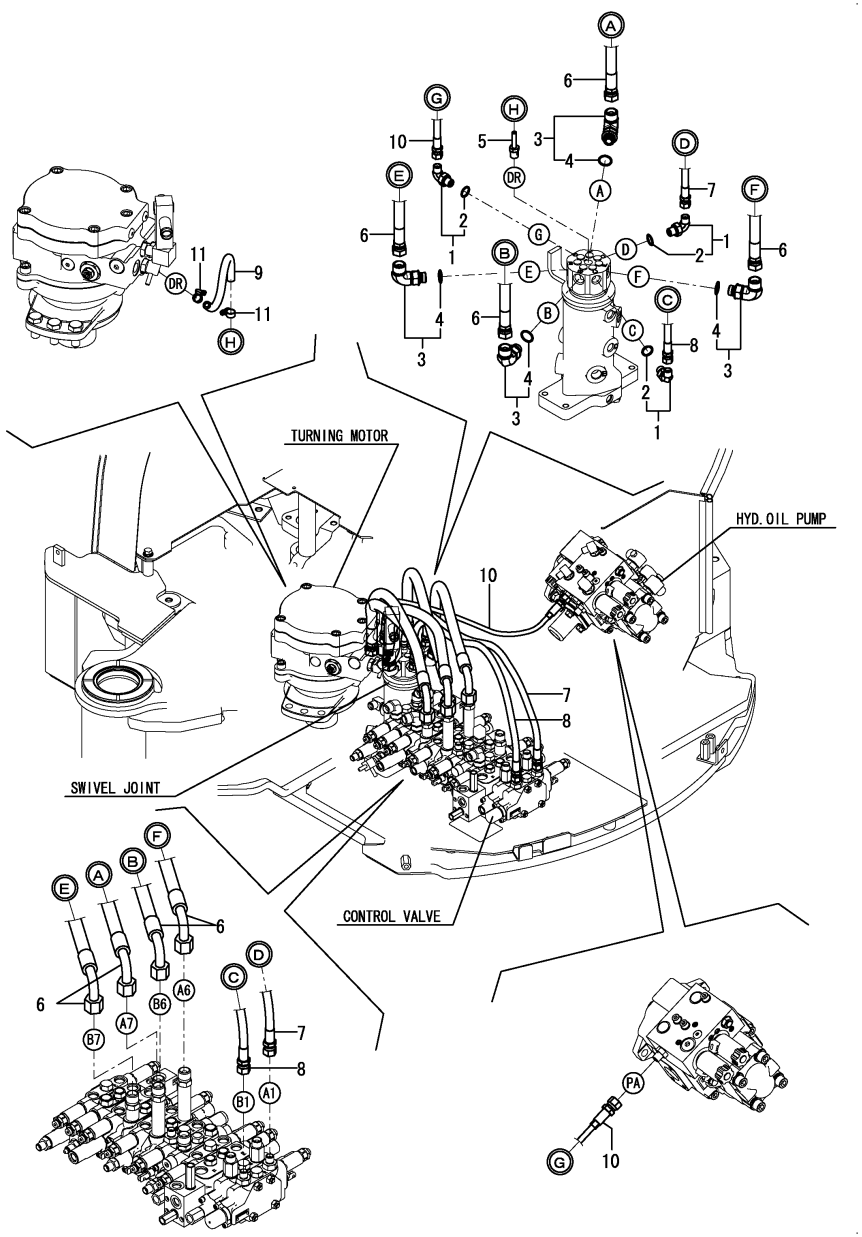


(A)=VIO30-6B P(KR)
(B)=
(C)=
(D)=
(E)=
(F)=

| No. | Lev. | Parts No. | Description | Q'ty (A) | (B) | (C) | (D) | (E) | (F) | I | R |
|---|---|---|---|---|---|---|---|---|---|---|---|
| 1 | 1 | 172B03-76010 | ELBOW, G1/4 | 3 | | | | | | | |
| 2 | 2 | 41851-000110 | O-RING, P11.0 HNBR | 3 | | | | | | | |
| 3 | 1 | 172B03-76130 | ELBOW, G1/2-3/8 | 4 | | | | | | | |
| 4 | 2 | 41851-000140 | O-RING, P 14.0 HNBR | 4 | | | | | | | |
| 5 | 1 | 172141-76220 | NIPPLE, 02 | 1 | | | | | | | |
| 6 | 1 | 172B03-78200 | HOSE, F208BC059S | 4 | | | | | | | |
| 7 | 1 | 172B03-78280 | HOSE, F204BB085S | 1 | | | | | | | |
| 8 | 1 | 172B03-78290 | HOSE, F204BB082S | 1 | | | | | | | |
| 9 | 1 | 172B03-78520 | HOSE, G804YY022S | 1 | | | | | | | |
| 10 | 1 | 172B03-78630 | HOSE, F403BB070S | 1 | | | | | | | |
| 11 | 1 | 23000-013000 | CLAMP, 13 | 2 | | | | | | | |

Remarks
* Fitting(control valve) is shown in Fig.87,88.

N:Old $\overset{\text{Yes}}{\underset{\text{No}}{\rightleftarrows}}$ New, Q:Old $\overset{\text{No}}{\underset{\text{Yes}}{\rightleftarrows}}$ New, R:Old $\overset{\text{Yes}}{\underset{\text{Yes}}{\rightleftarrows}}$ New, S:Old $\overset{\text{No}}{\underset{\text{No}}{\rightleftarrows}}$ New, W:Add, Z:Discontinued, F:Interchangeable by set, K:Q'ty Change

Copyright (C) YANMAR GLOBAL CS CO., LTD. All RightsReserved.

# Fig.93. HYD.OIL PIPING(TRACK FRAME)

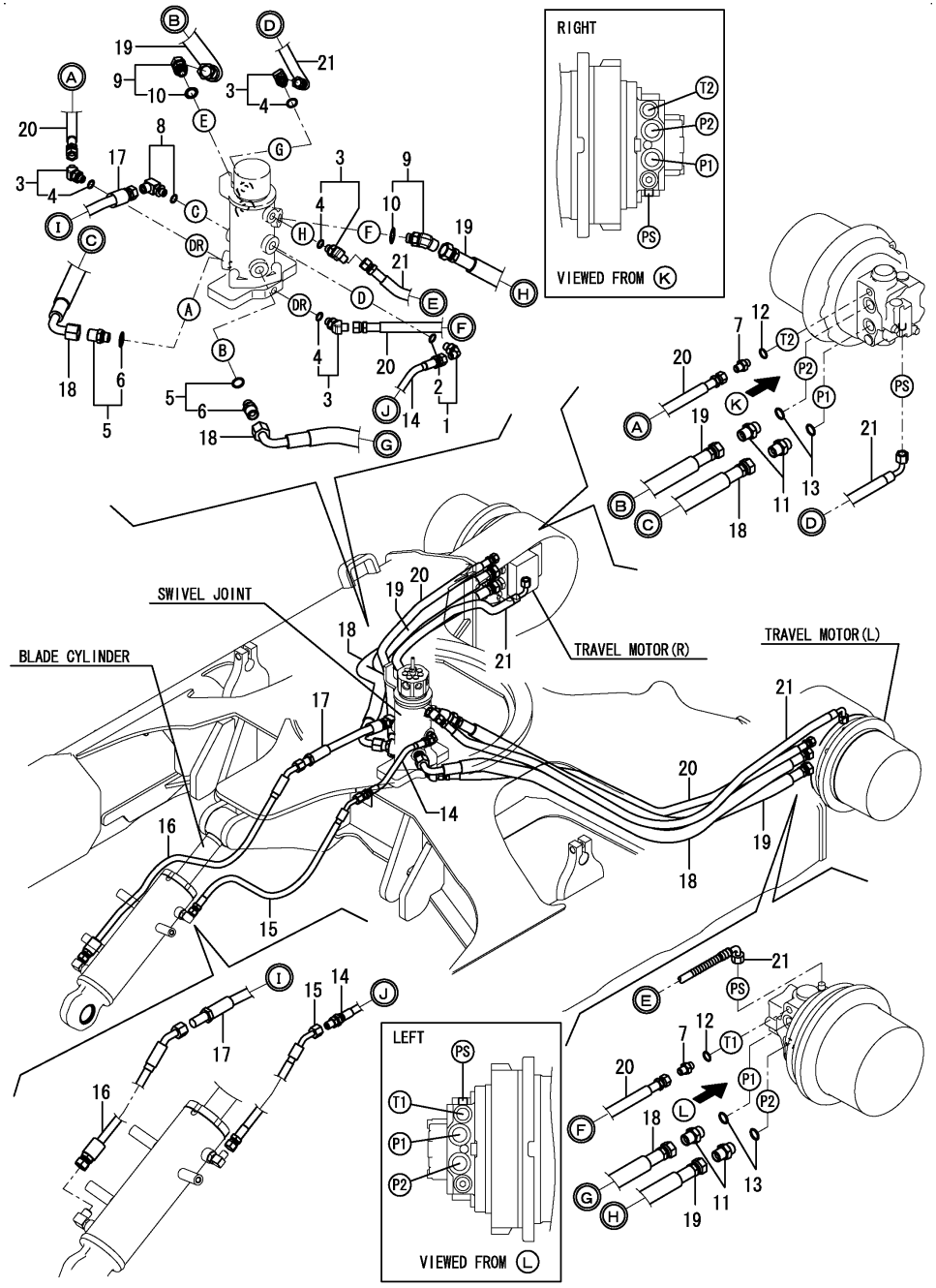


(A)=VIO30-6B P(KR)
(B)=
(C)=
(D)=
(E)=
(F)=

| No. | Lev. | Parts No. | Description | Q'ty (A) | (B) | (C) | (D) | (E) | (F) | I | R |
|---|---|---|---|---|---|---|---|---|---|---|---|
| 1 | 1 | 172B03-76010 | ELBOW, G1/4 | 1 | | | | | | | |
| 2 | 2 | 41851-000110 | O-RING, P11.0 HNBR | 1 | | | | | | | |
| 3 | 1 | 172173-76102 | CONNECTOR ASSY | 4 | | | | | | | |
| 4 | 2 | 41851-000110 | O-RING, P11.0 HNBR | 4 | | | | | | | |
| 5 | 1 | 172B03-76110 | CONNECTOR, G1/2X3/8 | 2 | | | | | | | |
| 6 | 2 | 41851-000140 | O-RING, P 14.0 HNBR | 2 | | | | | | | |
| 7 | 1 | 172123-76121 | ADAPTER, M/M PF1/4 | 2 | | | | | | | |
| 8 | 1 | 172173-76121 | CONNECTOR ASSY | 1 | | | | | | | |
| 9 | 1 | 172B03-76150 | ELBOW, 45 G1/2-3/8 | 2 | | | | | | | |
| 10 | 2 | 41851-000140 | O-RING, P 14.0 HNBR | 2 | | | | | | | |
| 11 | 1 | 172112-77361 | CONNECTOR, PF1/2-1/2 | 4 | | | | | | | |
| 12 | 1 | 41851-000110 | O-RING, P11.0 HNBR | 2 | | | | | | | |
| 13 | 1 | 41851-000180 | O-RING, P 18.0 HNBR | 4 | | | | | | | |
| 14 | 1 | 172B03-78320 | HOSE, H204BX027 | 1 | | | | | | | |
| 15 | 1 | 172B03-78330 | HOSE, F204BE063W | 1 | | | | | | | |
| 16 | 1 | 172B03-78340 | HOSE, F206BE087W | 1 | | | | | | | |
| 17 | 1 | 172B03-78350 | HOSE, H206BX027 | 1 | | | | | | | |
| 18 | 1 | 172B03-78360 | HOSE, F208BC106W | 2 | | | | | | | |
| 19 | 1 | 172B03-78370 | HOSE, H208BB103W | 2 | | | | | | | |
| 20 | 1 | 172B03-78380 | HOSE, F204BB105W | 2 | | | | | | | |
| 21 | 1 | 172B03-78390 | HOSE, F204BC116W | 2 | | | | | | | |

N:Old $\overset{\text{Yes}}{\underset{\text{No}}{\rightleftarrows}}$ New, Q:Old $\overset{\text{No}}{\underset{\text{Yes}}{\rightleftarrows}}$ New, R:Old $\overset{\text{Yes}}{\underset{\text{Yes}}{\rightleftarrows}}$ New, S:Old $\overset{\text{No}}{\underset{\text{No}}{\rightleftarrows}}$ New, W:Add, Z:Discontinued, F:Interchangeable by set, K:Q'ty Change

Copyright (C) YANMAR GLOBAL CS CO., LTD. All RightsReserved.

# Fig.94. HYD.OIL PIPING(ARM CYLINDER, BUCKET CYLINDER)

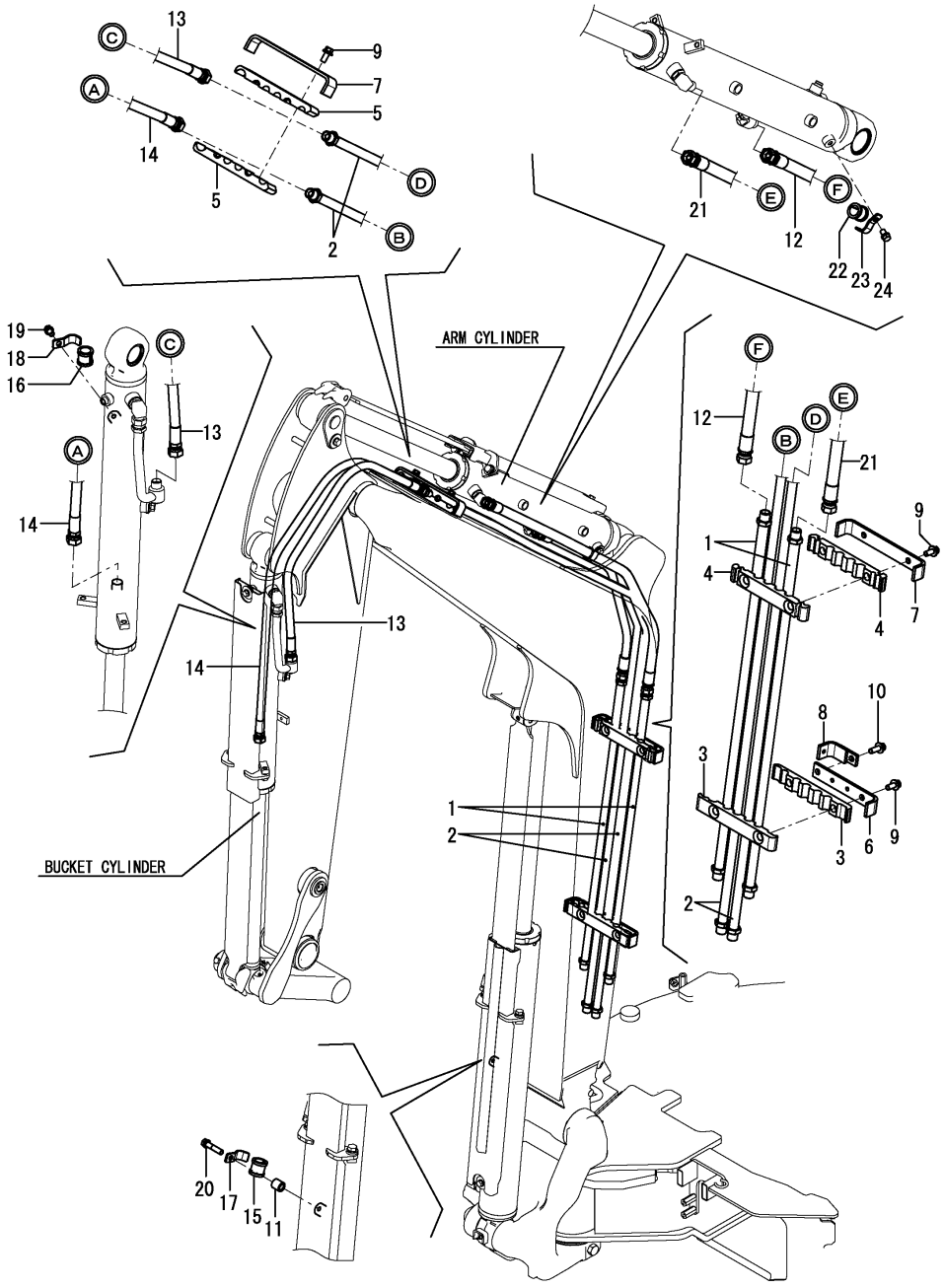


(A)=VIO30-6B P(KR)
(B)=
(C)=
(D)=
(E)=
(F)=

| No. | Lev. | Parts No. | Description | Q'ty (A) | (B) | (C) | (D) | (E) | (F) | I | R |
|---|---|---|---|---|---|---|---|---|---|---|---|
| 1 | 1 | 172B03-76220 | TUBE ASSY, ARM | 2 | | | | | | | |
| 2 | 1 | 172B02-76270 | TUBE ASSY, BUCKET | 2 | | | | | | | |
| 3 | 1 | 172B03-76400 | RUBBER, CLAMP A | 2 | | | | | | | |
| 4 | 1 | 172B03-76410 | RUBBER, CLAMP B | 2 | | | | | | | |
| 5 | 1 | 172B03-76420 | RUBBER, CLAMP C | 2 | | | | | | | |
| 6 | 1 | 172B03-76440 | CLAMP, TUBE A | 1 | | | | | | | |
| 7 | 1 | 172B03-76450 | CLAMP, TUBE B | 2 | | | | | | | |
| 8 | 1 | 172B03-76470 | CLAMP ASSY, BOOM | 1 | | | | | | | |
| 9 | 1 | 26014-100252 | BOLT, M10X 25 | 5 | | | | | | | |
| 10 | 1 | 26014-100302 | BOLT, M10X 30 | 1 | | | | | | | |
| 11 | 1 | 172A47-76460 | COLLAR, 12.2X20X20 | 1 | | | | | | | |
| 12 | 1 | 172B02-78400 | HOSE, H208BB069K | 1 | | | | | | | |
| 13 | 1 | 172B02-78420 | HOSE, H206BB075K | 1 | | | | | | | |
| 14 | 1 | 172B02-78430 | HOSE, H206BB107K | 1 | | | | | | | |
| 15 | 1 | 172B03-79860 | RUBBER, HOSE CLAMP | 1 | | | | | | | |
| 16 | 1 | 172B03-79860 | RUBBER, HOSE CLAMP | 1 | | | | | | | |
| 17 | 1 | 172B03-79870 | CLAMP, HOSE | 1 | | | | | | | |
| 18 | 1 | 172B03-79870 | CLAMP, HOSE | 1 | | | | | | | |
| 19 | 1 | 26013-100162 | BOLT, M10X 16 | 1 | | | | | | | |
| 20 | 1 | 26013-100452 | BOLT, M10X 45 | 1 | | | | | | | |
| 21 | 1 | 172B02-78410 | HOSE, H208BB112K | 1 | | | | | | | |
| 22 | 1 | 172B03-79860 | RUBBER, HOSE CLAMP | 1 | | | | | | | |
| 23 | 1 | 172B03-79870 | CLAMP, HOSE | 1 | | | | | | | |
| 24 | 1 | 26013-100162 | BOLT, M10X 16 | 1 | | | | | | | |

N:Old $\overset{\text{Yes}}{\underset{\text{No}}{\rightleftarrows}}$ New, Q:Old $\overset{\text{No}}{\underset{\text{Yes}}{\rightleftarrows}}$ New, R:Old $\overset{\text{Yes}}{\underset{\text{Yes}}{\rightleftarrows}}$ New, S:Old $\overset{\text{No}}{\underset{\text{No}}{\rightleftarrows}}$ New, W:Add, Z:Discontinued, F:Interchangeable by set, K:Q'ty Change

Copyright (C) YANMAR GLOBAL CS CO., LTD. All RightsReserved.

# Fig.95. HYD.OIL PIPING(P.T.O. : CONTROL VALVE - BOOM)

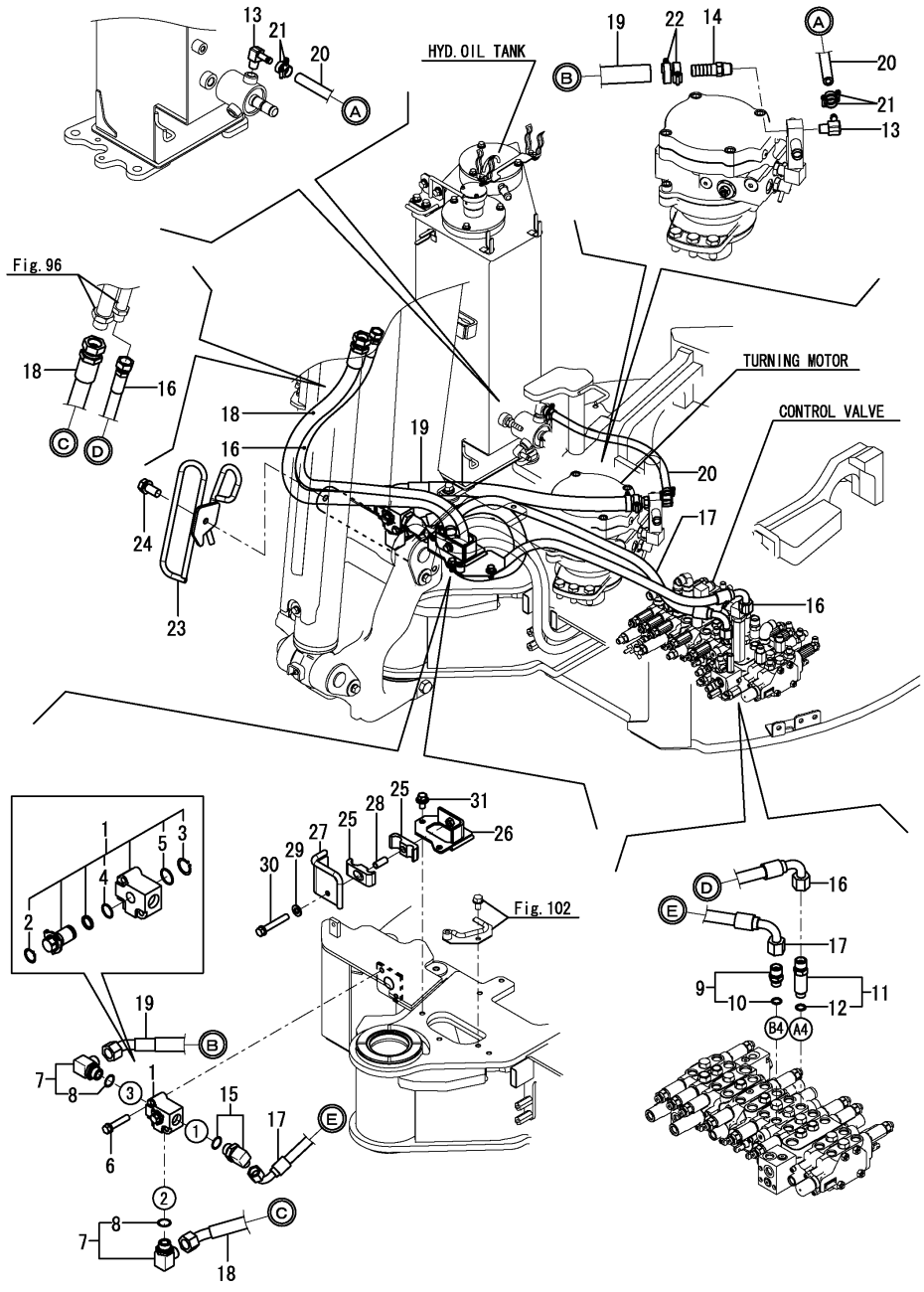


(A)=VIO30-6B P(KR)
(B)=
(C)=
(D)=
(E)=
(F)=

| No. | Lev. | Parts No. | Description | Q'ty (A) | (B) | (C) | (D) | (E) | (F) | I | R |
|---|---|---|---|---|---|---|---|---|---|---|---|
| 1 | 1 | 172A47-74121 | VALVE ASSY, SELECTOR | 1 | | | | | | | |
| 2 | 2 | 22242-000210 | RING, 21 | 1 | | | | | | | |
| 3 | 2 | 22242-000250 | RING, 25 | 1 | | | | | | | |
| 4 | 2 | 24315-000210 | O-RING, 1BP21.0 | 1 | | | | | | | |
| 5 | 2 | 24315-000250 | O-RING, 1BP25.0 | 1 | | | | | | | |
| 6 | 1 | 26013-100552 | BOLT, M10X 55 | 2 | | | | | | | |
| 7 | 1 | 172141-76090 | CONNECTOR ASSY | 2 | | | | | | | |
| 8 | 2 | 24315-000240 | O-RING, 1BP24.0 | 2 | | | | | | | |
| 9 | 1 | 172B03-76110 | CONNECTOR, G1/2X3/8 | 1 | | | | | | | |
| 10 | 2 | 41851-000140 | O-RING, P 14.0 HNBR | 1 | | | | | | | |
| 11 | 1 | 172B03-76160 | CONNECTOR,G1/2X3/8 M | 1 | | | | | | | |
| 12 | 2 | 41851-000140 | O-RING, P 14.0 HNBR | 1 | | | | | | | |
| 13 | 1 | 172168-76370 | ELBOW, 90 3/8-1/2 | 2 | | | | | | | |
| 14 | 1 | 172438-76460 | NIPPLE, HOSE 80 | 1 | | | | | | | |
| 15 | 1 | 172534-76760 | ELBOW, G3/4-G1/2 | 1 | | | | | | | |
| 16 | 1 | 172B03-79110 | HOSE, H208BC170K | 1 | | | | | | | |
| 17 | 1 | 172B03-79120 | HOSE, H208CC088S | 1 | | | | | | | |
| 18 | 1 | 172B03-79130 | HOSE, G112BE155K | 1 | | | | | | | |
| 19 | 1 | 172B03-79140 | HOSE, G612EY062S | 1 | | | | | | | |
| 20 | 1 | 172B03-79150 | HOSE, G606YY050S | 1 | | | | | | | |
| 21 | 1 | 23001-019000 | CLAMP, HOSE 19 | 4 | | | | | | | |
| 21-1 | 1 | 23001-019000 | CLAMP, HOSE 19 | 2 | | | | | | | K |
| | (A=MXXXXX) | | | | | | | | | | |
| 22 | 1 | 23001-035000 | CLAMP, HOSE 35 | 2 | | | | | | | |
| 23 | 1 | 172B03-79811 | GUIDE ASSY, HOSE PTO | 1 | | | | | | | |
| 24 | 1 | 26013-120252 | BOLT, M12X 25 | 1 | | | | | | | |
| 25 | 1 | 172187-76940 | RUBBER, CLAMP B | 2 | | | | | | | |
| 26 | 1 | 172B03-77610 | CLAMP ASSY, HOSE | 1 | | | | | | | |
| 27 | 1 | 172B03-77661 | CLAMP ASSY, HOSE PTO | 1 | | | | | | | |
| 28 | 1 | 172455-79140 | COLLAR, CLAMP | 1 | | | | | | | |
| 29 | 1 | 22137-100000 | WASHER, 10 | 1 | | | | | | | |
| 30 | 1 | 26013-100652 | BOLT, M10X 65 | 1 | | | | | | | |
| 31 | 1 | 26014-100202 | BOLT, M10X 20 | 2 | | | | | | | |

N:Old ⇔ New, Q:Old ⇔ New, R:Old ⇔ New, S:Old ⇔ New, W:Add, Z:Discontinued, F:Interchangeable by set, K:Q'ty Change

Copyright (C) YANMAR GLOBAL CS CO., LTD. All RightsReserved.

# Fig.96. HYD.OIL PIPING(P.T.O. : BOOM - ARM END)



(A)=VIO30-6B P(KR)
(B)=
(C)=
(D)=
(E)=
(F)=

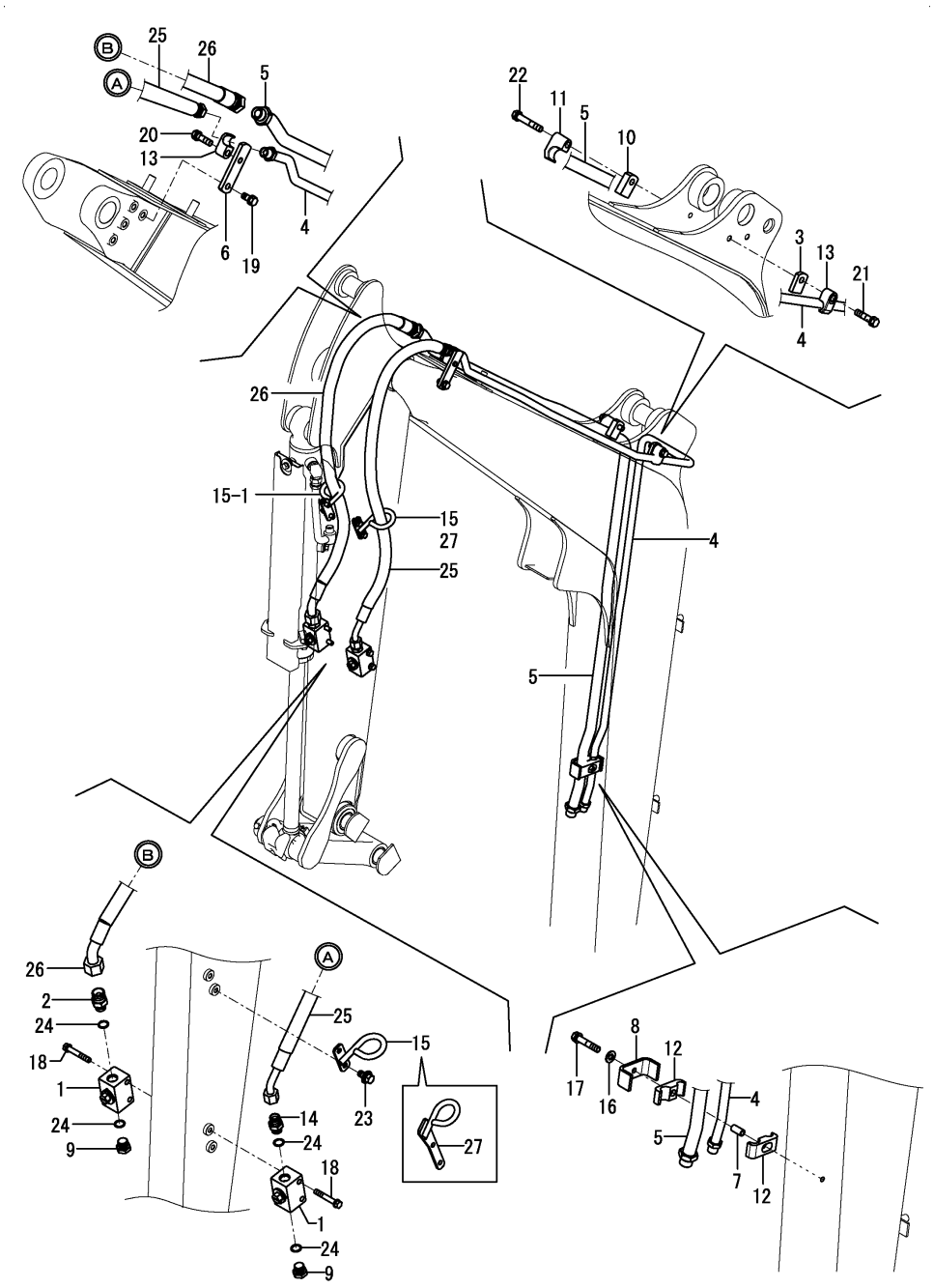


| No. | Lev. | Parts No. | Description | Q'ty (A) | (B) | (C) | (D) | (E) | (F) | I | R |
|---|---|---|---|---|---|---|---|---|---|---|---|
| 1 | 1 | 172B03-74900 | VALVE ASSY,STOP G1/2 | 2 | | | | | | | |
| 2 | 1 | 172187-76200 | ADAPTER, 1/2-3/4 | 1 | | | | | | | |
| 3 | 1 | 172183-76250-Y | PLATE, SPACER | 1 | | | | | | | |
| 4 | 1 | 172B02-76350 | TUBE ASSY, PTO L | 1 | | | | | | | |
| 5 | 1 | 172B02-76370 | TUBE ASSY, PTO R | 1 | | | | | | | |
| 6 | 1 | 172B03-76511 | STAY, CLAMP PTO | 1 | | | | | | | |
| 7 | 1 | 172187-76520 | COLLAR, CLAMP | 1 | | | | | | | |
| 8 | 1 | 172187-76530-Y | CLAMP, TUBE | 1 | | | | | | | |
| 9 | 1 | 172165-76580 | PLUG, HEXAGON PF1/2 | 2 | | | | | | | |
| 10 | 1 | 172187-76690-Y | PLATE, SPACER T16 | 1 | | | | | | | |
| 11 | 1 | 172142-76940-Y | CLAMP, 3/4 | 1 | | | | | | | |
| 12 | 1 | 172187-76940 | RUBBER, CLAMP B | 2 | | | | | | | |
| 13 | 1 | 172142-76950-Y | CLAMP, 1/2 | 2 | | | | | | | |
| 14 | 1 | 172112-77361 | CONNECTOR, PF1/2-1/2 | 1 | | | | | | | |
| 15 | 1 | 172B03-77900 | GUIDE ASSY, HOSE PTO | 2 | | | | | | | |
| 15-1 | 1 | 172B03-77900 | GUIDE ASSY, HOSE PTO | 1 | | | | | | K | |
| | (A=MBF527) | | | | | | | | | | |
| 16 | 1 | 22137-100000 | WASHER, 10 | 1 | | | | | | Z | |
| | (A=*2020.03.) | | | | | | | | | | |
| 17 | 1 | 26013-100502 | BOLT, M10X 50 | 1 | | | | | | | |
| 17-1 | 1 | 26014-100502 | BOLT, M10X 50 | 1 | | | | | | N | |
| | (A=*2020.03.) | | | | | | | | | | |
| 18 | 1 | 26013-100652 | BOLT, M10X 65 | 4 | | | | | | | |
| 19 | 1 | 26013-120252 | BOLT, M12X 25 | 1 | | | | | | | |
| 20 | 1 | 26013-120402 | BOLT, M12X 40 | 1 | | | | | | | |
| 20-1 | 1 | 26014-120402 | BOLT, 12 X 40 | 1 | | | | | | N | |
| | (A=*2016.05.) | | | | | | | | | | |
| 21 | 1 | 26013-120502 | BOLT, M12X 50 | 1 | | | | | | | |
| 21-1 | 1 | 26014-120502 | BOLT, 12 X 50 | 1 | | | | | | N | |
| | (A=*2016.05.) | | | | | | | | | | |
| 22 | 1 | 26013-120702 | BOLT, M12X 70 | 1 | | | | | | | |
| 22-1 | 1 | 26014-120702 | BOLT, 12 X 70 | 1 | | | | | | N | |
| | (A=*2016.05.) | | | | | | | | | | |
| 23 | 1 | 26014-100202 | BOLT, M10X 20 | 4 | | | | | | | |
| 24 | 1 | 41851-000180 | O-RING, P 18.0 HNBR | 4 | | | | | | | |
| 25 | 1 | 172B02-79160 | HOSE, H208BE094W | 1 | | | | | | | |
| 26 | 1 | 172B02-79170 | HOSE, H112BE113W | 1 | | | | | | | |
| 27 | 1 | 172B02-77900 | GUIDE ASSY,HOSE PTOL | 1 | | | | | | W | |
| | (A=MBF527) | | | | | | | | | | |

N:Old $\overset{\text{Yes}}{\underset{\text{No}}{\leftrightarrows}}$ New, Q:Old $\overset{\text{No}}{\underset{\text{Yes}}{\leftrightarrows}}$ New, R:Old $\overset{\text{Yes}}{\underset{\text{Yes}}{\leftrightarrows}}$ New, S:Old $\overset{\text{No}}{\underset{\text{No}}{\leftrightarrows}}$ New, W:Add, Z:Discontinued, F:Interchangeable by set, K:Q'ty Change

Copyright (C) YANMAR GLOBAL CS CO., LTD. All RightsReserved.

# Fig.97. CONTROL PIPING(REMOTE CONTROL V. - CONTROL V.)(TO M60543)

(A)=VIO30-6B P(KR)
(B)=
(C)=
(D)=
(E)=
(F)=

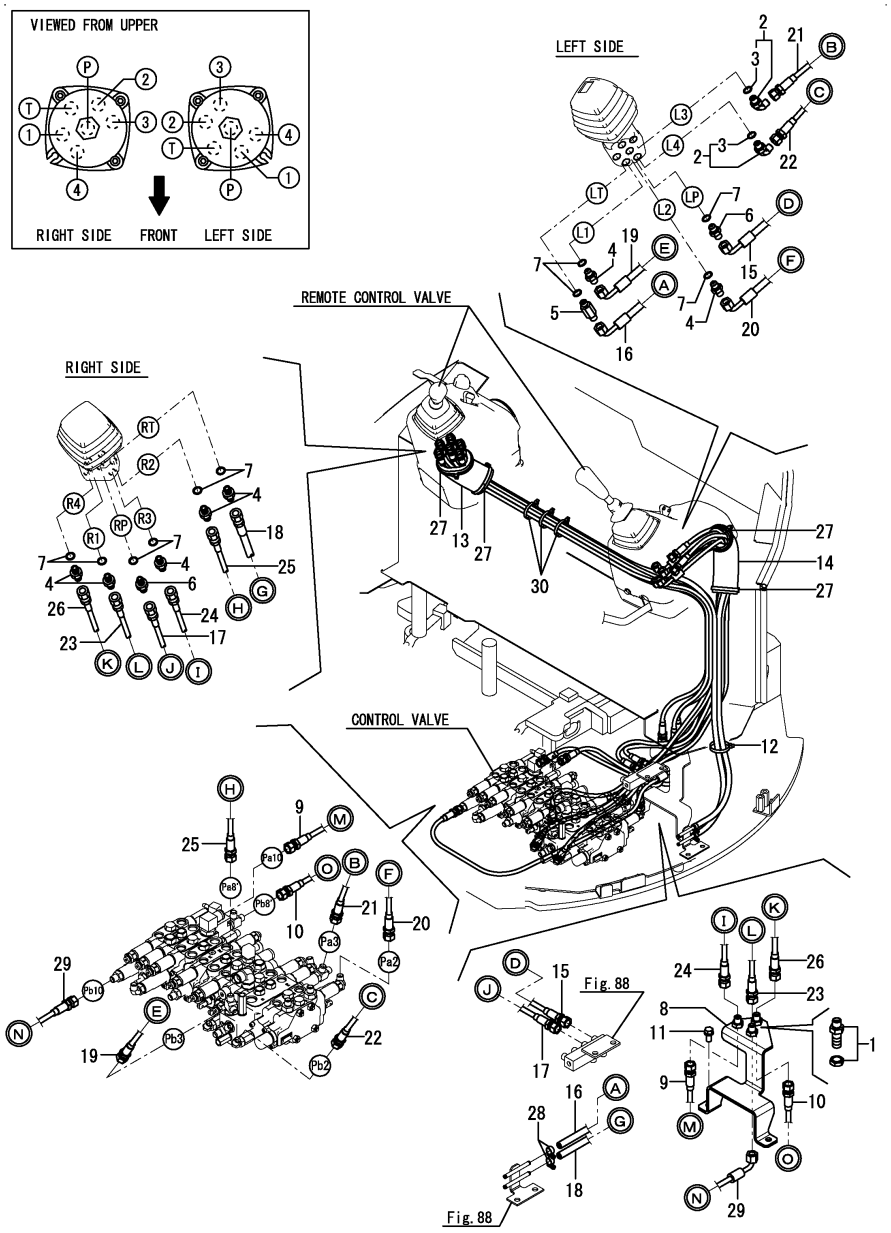


| No. | Lev. | Parts No. | Description | Q'ty (A) | (B) | (C) | (D) | (E) | (F) | I | R |
|---|---|---|---|---|---|---|---|---|---|---|---|
| 1 | 1 | 172151-76050 | JOINT | 3 | | | | | | | |
| 2 | 1 | 172B03-76010 | ELBOW, G1/4 | 2 | | | | | | | |
| 3 | 2 | 41851-000110 | O-RING, P11.0 HNBR | 2 | | | | | | | |
| 4 | 1 | 172123-76121 | ADAPTER, M/M PF1/4 | 7 | | | | | | | |
| 5 | 1 | 172183-76200 | CONNECTOR, 1/4-1/4 | 1 | | | | | | | |
| 6 | 1 | 172455-76220 | CONNECTOR, PF1/4 | 2 | | | | | | | |
| 7 | 1 | 41851-000110 | O-RING, P11.0 HNBR | 10 | | | | | | | |
| 8 | 1 | 172B03-74490 | BRACKET, NO MULTI | 1 | | | | | | | |
| 9 | 1 | 172B03-79550 | HOSE, F403BB050S | 1 | | | | | | | |
| 10 | 1 | 172B03-79570 | HOSE, F403BB047S | 1 | | | | | | | |
| 11 | 1 | 26013-100202 | BOLT, M10X 20 | 2 | | | | | | | |
| 12 | 1 | 172183-16560 | CLIP, HOSE 400 | 1 | | | | | | | |
| 13 | 1 | 172458-63641 | SPONGE, HOSE 120 | 1 | | | | | | | |
| 14 | 1 | 172458-78571 | SPONGE, HOSE | 1 | | | | | | | |
| 15 | 1 | 172B03-78850 | HOSE, F403BC115S | 1 | | | | | | | |
| 16 | 1 | 172B03-78860 | HOSE, G804CY115S | 1 | | | | | | | |
| 17 | 1 | 172B03-78910 | HOSE, F403BB165S | 1 | | | | | | | |
| 18 | 1 | 172B03-78920 | HOSE, G804BY165S | 1 | | | | | | | |
| 19 | 1 | 172B03-78930 | HOSE, F403BC158S | 1 | | | | | | | |
| 20 | 1 | 172B03-78940 | HOSE, F403BC106S | 1 | | | | | | | |
| 21 | 1 | 172B03-78950 | HOSE, F403BB105S | 1 | | | | | | | |
| 22 | 1 | 172B03-78960 | HOSE, F403BB131S | 1 | | | | | | | |
| 23 | 1 | 172B03-79670 | HOSE, F403BB140S | 1 | | | | | | | |
| 24 | 1 | 172B03-79690 | HOSE, F403BB136S | 1 | | | | | | | |
| 25 | 1 | 172B03-79770 | HOSE, F403BB185S | 1 | | | | | | | |
| 26 | 1 | 172B03-79780 | HOSE, F403BB140S | 1 | | | | | | | |
| 27 | 1 | 172122-79930 | CLAMP, HOSE B | 4 | | | | | | | |
| 28 | 1 | 23000-013000 | CLAMP, 13 | 2 | | | | | | | |
| 29 | 1 | 172B03-79560 | HOSE, F403BC111S | 1 | | | | | | | |
| 30 | 1 | 172126-11510 | BAND, BINDING 300 | 3 | | | | | | | W |

(A=MZZZZZ)

Remarks
* Fitting(control valve) is shown in Fig.87,88.

N:Old ⇔ New, Q:Old ⇔ New, R:Old ⇔ New, S:Old ⇔ New, W:Add, Z:Discontinued, F:Interchangeable by set, K:Q'ty Change
Copyright (C) YANMAR GLOBAL CS CO., LTD. All RightsReserved.

# Fig.133. (97A)CONTROL PIPING(REMOTE C/V- C/V)(P.T.O. HAND OPERATE SPEC.)(FROM M60544)

(A)=VIO30-6B P(KR)
(B)=
(C)=
(D)=
(E)=
(F)=

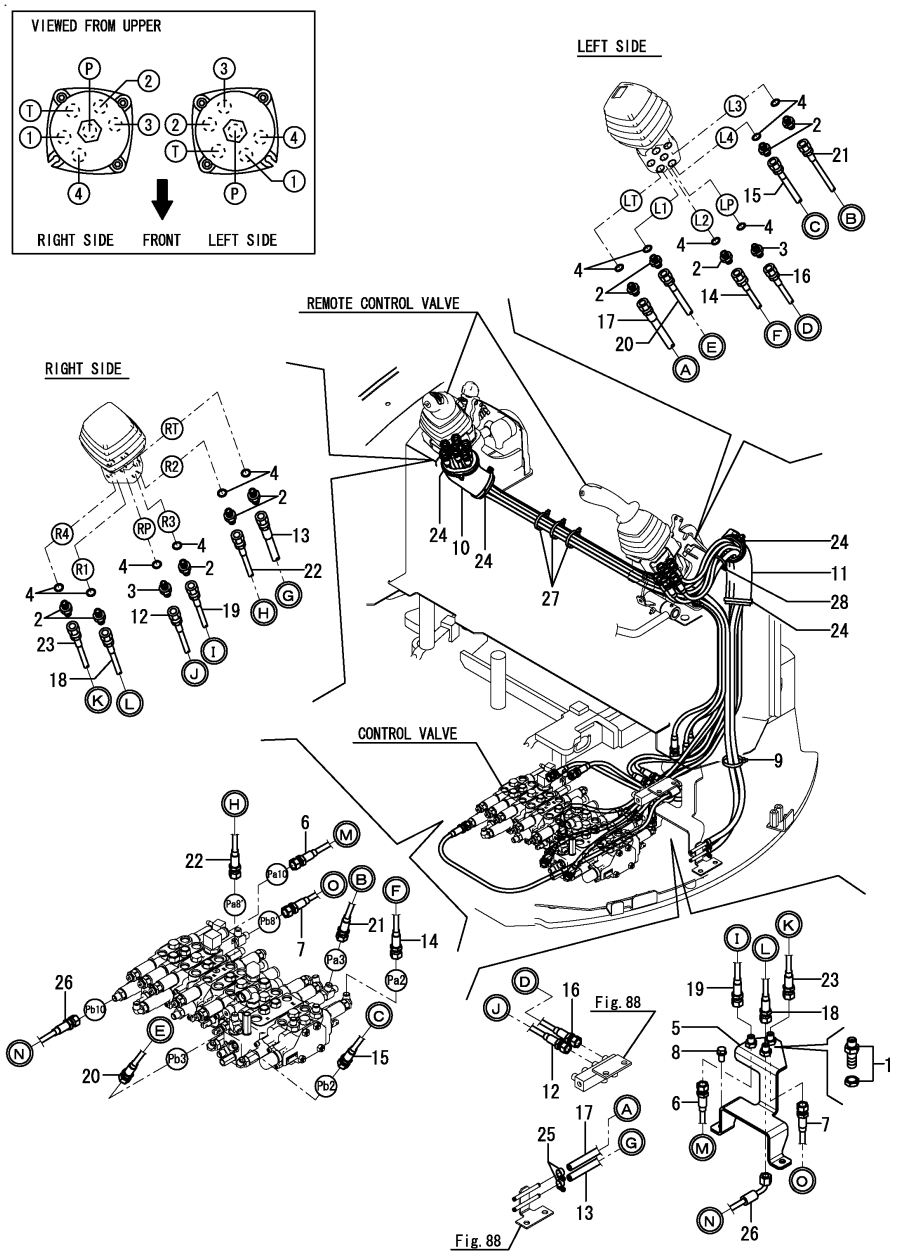


| No. | Lev. | Parts No. | Description | Q'ty (A) | (B) | (C) | (D) | (E) | (F) | I | R |
|---|---|---|---|---|---|---|---|---|---|---|---|
| 1 | 1 | 172151-76050 | JOINT | 3 | | | | | | | |
| 2 | 1 | 172123-76121 | ADAPTER, M/M PF1/4 | 10 | | | | | | | |
| 3 | 1 | 172455-76220 | CONNECTOR, PF1/4 | 2 | | | | | | | |
| 4 | 1 | 41851-000110 | O-RING, P11.0 HNBR | 12 | | | | | | | |
| 5 | 1 | 172B03-74490 | BRACKET, NO MULTI | 1 | | | | | | | |
| 6 | 1 | 172B03-79550 | HOSE, F403BB050S | 1 | | | | | | | |
| 7 | 1 | 172B03-79570 | HOSE, F403BB047S | 1 | | | | | | | |
| 8 | 1 | 26013-100202 | BOLT, M10X 20 | 2 | | | | | | | |
| 9 | 1 | 172183-16560 | CLIP, HOSE 400 | 1 | | | | | | | |
| 10 | 1 | 172458-63641 | SPONGE, HOSE 120 | 1 | | | | | | | |
| 11 | 1 | 172458-78571 | SPONGE, HOSE | 1 | | | | | | | |
| 12 | 1 | 172B03-78910 | HOSE, F403BB165S | 1 | | | | | | | |
| 13 | 1 | 172B03-78920 | HOSE, G804BY165S | 1 | | | | | | | |
| 14 | 1 | 172B03-79620 | HOSE, F403BB113S | 1 | | | | | | | |
| 15 | 1 | 172B03-79640 | HOSE, F403BB138S | 1 | | | | | | | |
| 16 | 1 | 172B03-79650 | HOSE, F403BB110S | 1 | | | | | | | |
| 17 | 1 | 172B03-79660 | HOSE, G804BY115S | 1 | | | | | | | |
| 18 | 1 | 172B03-79670 | HOSE, F403BB140S | 1 | | | | | | | |
| 19 | 1 | 172B03-79690 | HOSE, F403BB136S | 1 | | | | | | | |
| 20 | 1 | 172B03-79750 | HOSE, F403BB165S | 1 | | | | | | | |
| 21 | 1 | 172B03-79760 | HOSE, F403BB112S | 1 | | | | | | | |
| 22 | 1 | 172B03-79770 | HOSE, F403BB185S | 1 | | | | | | | |
| 23 | 1 | 172B03-79780 | HOSE, F403BB140S | 1 | | | | | | | |
| 24 | 1 | 172122-79930 | CLAMP, HOSE B | 4 | | | | | | | |
| 25 | 1 | 23000-013000 | CLAMP, 13 | 2 | | | | | | | |
| 26 | 1 | 172B03-79560 | HOSE, F403BC111S | 1 | | | | | | | |
| 27 | 1 | 172126-11510 | BAND, BINDING 300 | 3 | | | | | | | |
| 28 | 1 | 172126-11510 | BAND, BINDING 300 | 1 | | | | | | | |

Remarks
* Fitting(control valve) is shown in Fig.87,88.

N:Old $\overset{\text{Yes}}{\underset{\text{No}}{\rightleftarrows}}$ New, Q:Old $\overset{\text{No}}{\underset{\text{Yes}}{\rightleftarrows}}$ New, R:Old $\overset{\text{Yes}}{\underset{\text{Yes}}{\rightleftarrows}}$ New, S:Old $\overset{\text{No}}{\underset{\text{No}}{\rightleftarrows}}$ New, W:Add, Z:Discontinued, F:Interchangeable by set, K:Q'ty Change

Copyright (C) YANMAR GLOBAL CS CO., LTD. All RightsReserved.

# Fig.98. ACCUMULATOR

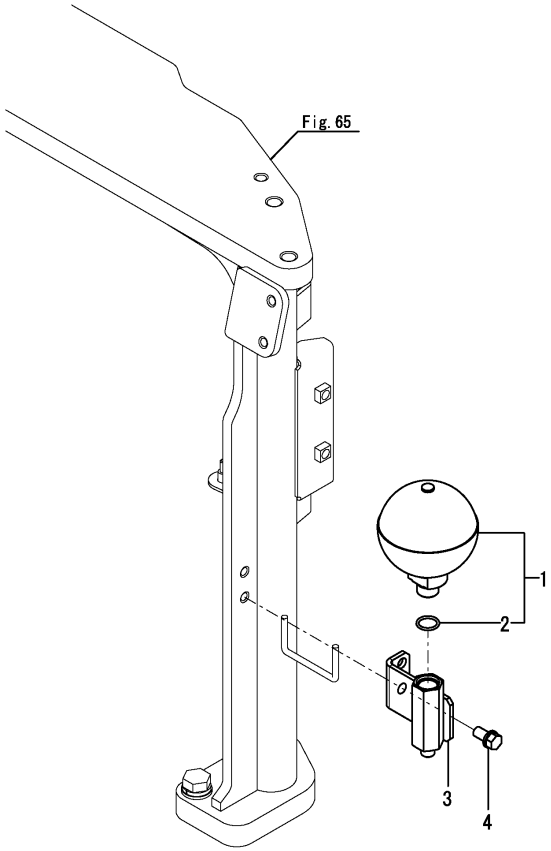




(A)=VIO30-6B P(KR)
(B)=
(C)=
(D)=
(E)=
(F)=

| No. | Lev. | Parts No. | Description | Q'ty (A) | (B) | (C) | (D) | (E) | (F) | I | R |
|---|---|---|---|---|---|---|---|---|---|---|---|
| 1 | 1 | 172B03-73600 | ACCUMULATOR | 1 | | | | | | | |
| 2 | 2 | 24311-000180 | O-RING, 1AP18.0 | 1 | | | | | | | |
| 3 | 1 | 172B03-76030 | STAY ASSY | 1 | | | | | | | |
| 4 | 1 | 26013-100202 | BOLT, M10X 20 | 2 | | | | | | | |

N:Old $\overset{\text{Yes}}{\underset{\text{No}}{\leftrightarrows}}$ New, Q:Old $\overset{\text{No}}{\underset{\text{Yes}}{\leftrightarrows}}$ New, R:Old $\overset{\text{Yes}}{\underset{\text{Yes}}{\leftrightarrows}}$ New, S:Old $\overset{\text{No}}{\underset{\text{No}}{\leftrightarrows}}$ New, W:Add, Z:Discontinued, F:Interchangeable by set, K:Q'ty Change

Copyright (C) YANMAR GLOBAL CS CO., LTD. All RightsReserved.

# Fig.99. GREASING



(A)=VIO30-6B P(KR)
(B)=
(C)=
(D)=
(E)=
(F)=

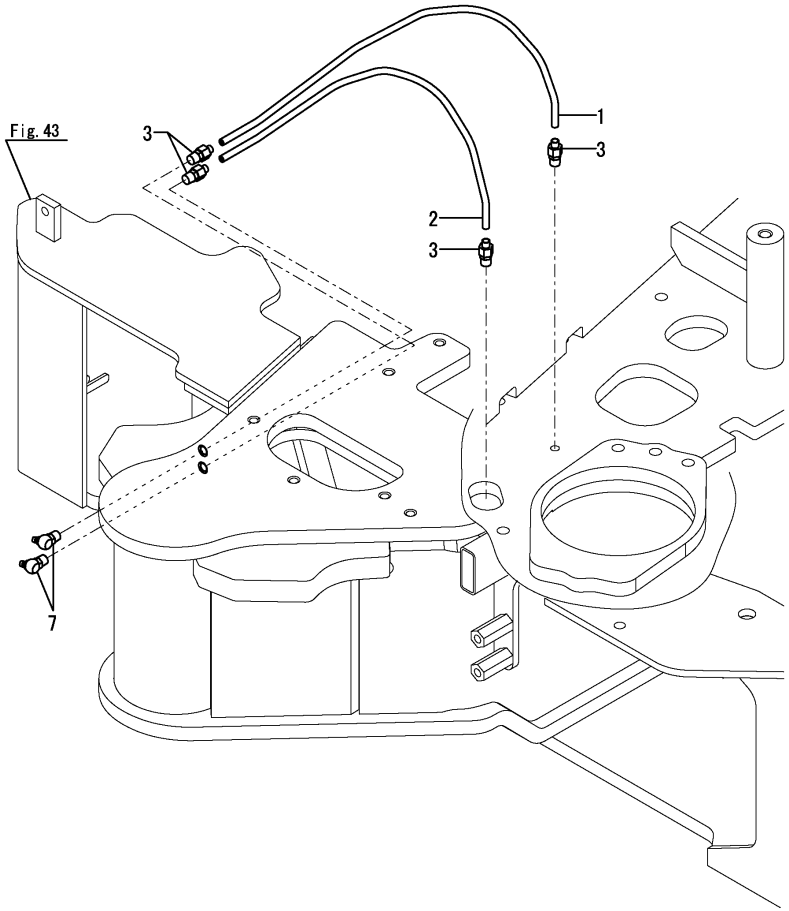


| No. | Lev. | Parts No. | Description | Q'ty (A) | (B) | (C) | (D) | (E) | (F) | I | R |
|---|---|---|---|---|---|---|---|---|---|---|---|
| 1 | 1 | 172A46-77800 | HOSE, P602YY050 | 1 | | | | | | | |
| 2 | 1 | 172A89-77800 | HOSE, P602YY045 | 1 | | | | | | | |
| 3 | 1 | 172A47-77820 | JOINT, GREASE | 4 | | | | | | | |
| 7 | 1 | 24761-040000 | NIPPLE, GREASE B | 2 | | | | | | | |

N:Old $\overset{\text{Yes}}{\underset{\text{No}}{\leftrightarrows}}$ New, Q:Old $\overset{\text{No}}{\underset{\text{Yes}}{\leftrightarrows}}$ New, R:Old $\overset{\text{Yes}}{\underset{\text{Yes}}{\leftrightarrows}}$ New, S:Old $\overset{\text{No}}{\underset{\text{No}}{\leftrightarrows}}$ New, W:Add, Z:Discontinued, F:Interchangeable by set, K:Q'ty Change

Copyright (C) YANMAR GLOBAL CS CO., LTD. All RightsReserved.

# Fig.101. QUICK COUPLER(HYD.OIL PIPING:1)

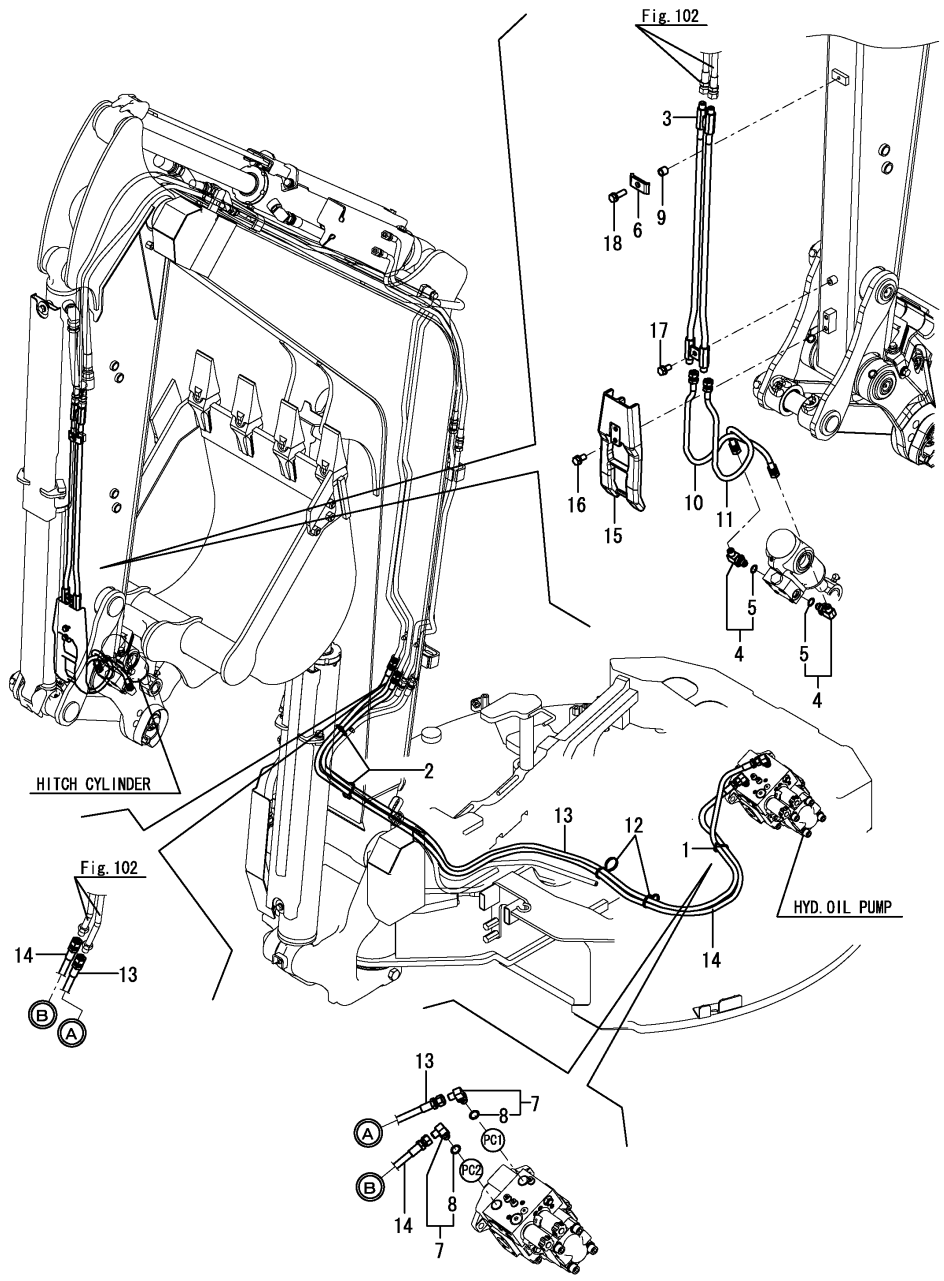


(A)=VIO30-6B P(KR)
(B)=
(C)=
(D)=
(E)=
(F)=

| No. | Lev. | Parts No. | Description | Q'ty (A) | (B) | (C) | (D) | (E) | (F) | I | R |
|---|---|---|---|---|---|---|---|---|---|---|---|
| 1 | 1 | 194202-56460 | BAND, BINDING 200 | 1 | | | | | | | |
| 2 | 1 | 194202-56460 | BAND, BINDING 200 | 2 | | | | | | | |
| 3 | 1 | 172958-76102-Y | TUBE, HITCH | 1 | | | | | | | |
| 4 | 1 | 172958-76130 | ELBOW, PF-1/4-PF1/4 | 2 | | | | | | | |
| 5 | 2 | 24315-000110 | O-RING, 1BP11.0 | 2 | | | | | | | |
| 6 | 1 | 172110-76170 | PLATE | 1 | | | | | | | |
| 7 | 1 | 172141-76181 | CONNECTOR ASSY, 02FF | 2 | | | | | | | |
| 7-1 | 1 (A=MXXXXX) | 172B03-76010 | ELBOW, G1/4 | 2 | | | | | | | R |
| 8 | 2 | 41851-000110 | O-RING, P11.0 HNBR | 2 | | | | | | | |
| 9 | 1 | 172137-76580 | COLLAR, 9X11 | 1 | | | | | | | |
| 10 | 1 | 172958-78200 | HOSE, F102BB050W | 1 | | | | | | | |
| 11 | 1 | 172958-78210 | HOSE, F102BB052W | 1 | | | | | | | |
| 12 | 1 | 172187-78580 | BAND, BINDING W 397 | 2 | | | | | | | |
| 13 | 1 | 172B03-79010 | HOSE, H604BB238K | 1 | | | | | | | |
| 14 | 1 | 172B03-79020 | HOSE, H604BB238K | 1 | | | | | | | |
| 15 | 1 | 172958-81904-Y | COVER, ARM | 1 | | | | | | | |
| 16 | 1 | 26013-080162 | BOLT, M8X 16 | 2 | | | | | | | |
| 17 | 1 | 26013-080162 | BOLT, M8X 16 | 1 | | | | | | | |
| 18 | 1 | 26014-080252 | BOLT, M8X 25 | 1 | | | | | | | |

N:Old $\overset{\text{Yes}}{\underset{\text{No}}{\leftrightarrows}}$ New, Q:Old $\overset{\text{No}}{\underset{\text{Yes}}{\leftrightarrows}}$ New, R:Old $\overset{\text{Yes}}{\underset{\text{Yes}}{\leftrightarrows}}$ New, S:Old $\overset{\text{No}}{\underset{\text{No}}{\leftrightarrows}}$ New, W:Add, Z:Discontinued, F:Interchangeable by set, K:Q'ty Change

Copyright (C) YANMAR GLOBAL CS CO., LTD. All RightsReserved.

# Fig.102. QUICK COUPLER(HYD.OIL PIPING:2)



(A)=VIO30-6B P(KR)
(B)=
(C)=
(D)=
(E)=
(F)=

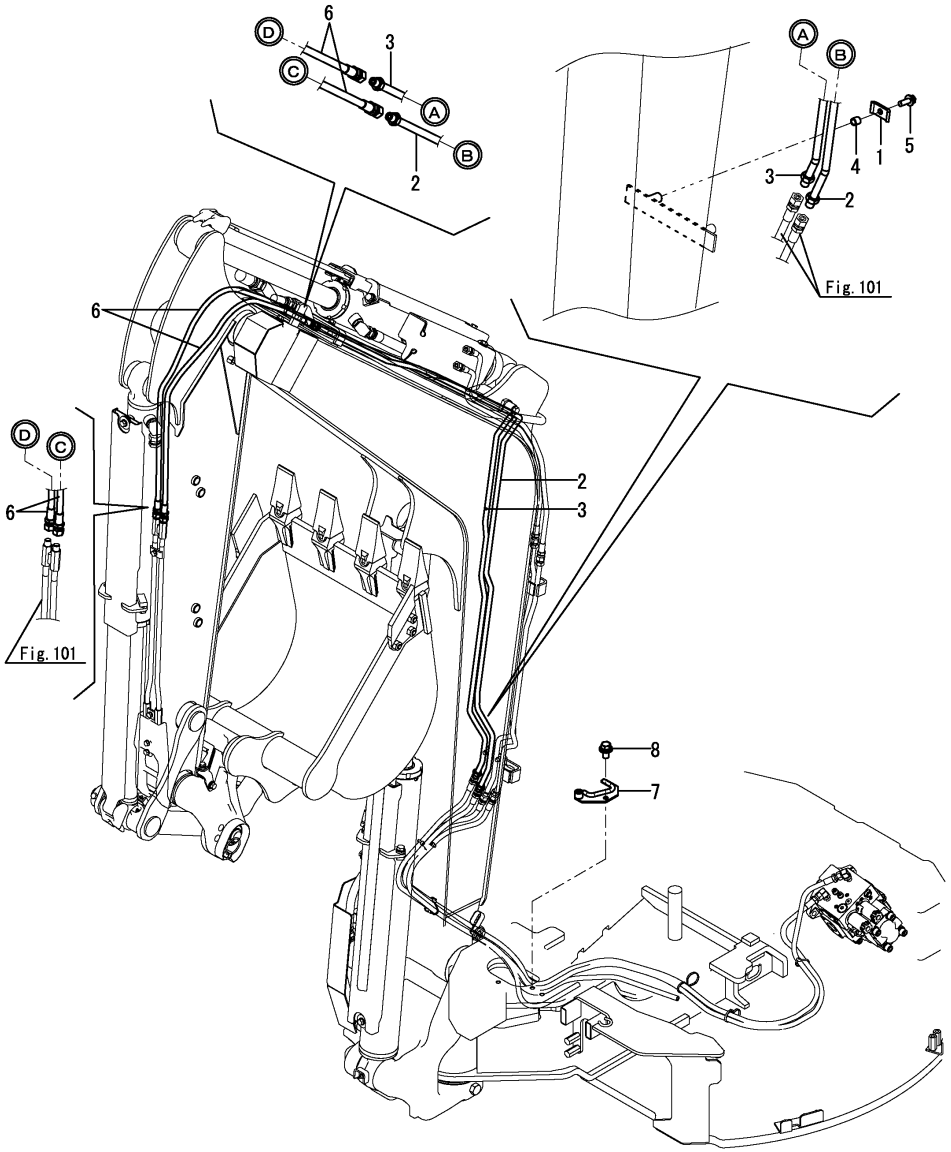


| No. | Lev. | Parts No. | Description | Q'ty (A) | (B) | (C) | (D) | (E) | (F) | I | R |
|---|---|---|---|---|---|---|---|---|---|---|---|
| 1 | 1 | 172110-76170 | PLATE | 1 | | | | | | | |
| 2 | 1 | 172B02-76550 | TUBE ASSY, L QH | 1 | | | | | | | |
| 3 | 1 | 172B02-76570 | TUBE ASSY, R QH | 1 | | | | | | | |
| 4 | 1 | 172137-76580 | COLLAR, 9X11 | 1 | | | | | | | |
| 5 | 1 | 26014-080252 | BOLT, M8X 25 | 1 | | | | | | | |
| 6 | 1 | 172B02-79030 | HOSE, H604BB089K | 2 | | | | | | | |
| 7 | 1 | 172B03-77710 | GUIDE ASSY, HOSE Q-K | 1 | | | | | | | |
| 8 | 1 | 26014-100202 | BOLT, M10X 20 | 1 | | | | | | | |
| 8-1 | 1 | 26014-100252 | BOLT, M10X 25 | 1 | | | | | | N | |

(A=*2020.05)

N:Old $\overset{\text{Yes}}{\underset{\text{No}}{\rightleftarrows}}$ New, Q:Old $\overset{\text{No}}{\underset{\text{Yes}}{\rightleftarrows}}$ New, R:Old $\overset{\text{Yes}}{\underset{\text{Yes}}{\rightleftarrows}}$ New, S:Old $\overset{\text{No}}{\underset{\text{No}}{\rightleftarrows}}$ New, W:Add, Z:Discontinued, F:Interchangeable by set, K:Q'ty Change

Copyright (C) YANMAR GLOBAL CS CO., LTD. All RightsReserved.

# Fig.136. P.T.O. : SOLENOID VALVE(HAND OPERATE SPEC.)(FROM M60544)

(A)=VIO30-6B P(KR)
(B)=
(C)=
(D)=
(E)=
(F)=

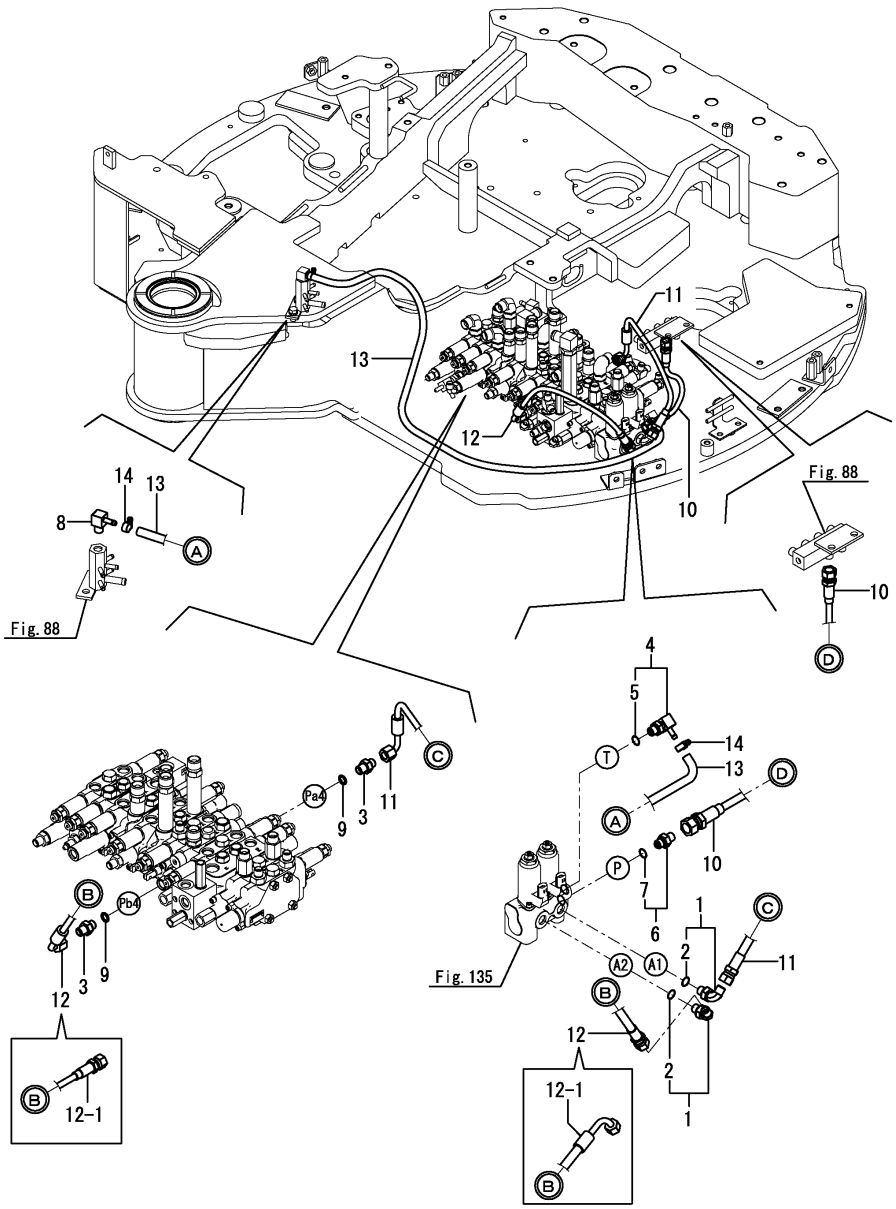


| No. | Lev. | Parts No. | Description | Q'ty (A) | (B) | (C) | (D) | (E) | (F) | I | R |
|---|---|---|---|---|---|---|---|---|---|---|---|
| 1 | 1 | 172B03-76010 | ELBOW, G1/4 | 2 | | | | | | | |
| 2 | 2 | 41851-000110 | O-RING, P11.0 HNBR | 2 | | | | | | | |
| 3 | 1 | 172123-76121 | ADAPTER, M/M PF1/4 | 2 | | | | | | | |
| 4 | 1 | 172458-76150 | NIPPLE, ELBOW PF1/4 | 1 | | | | | | | |
| 5 | 2 | 24315-000110 | O-RING, 1BP11.0 | 1 | | | | | | | |
| 6 | 1 | 172B03-76180 | CONNECTOR, G1/4 | 1 | | | | | | | |
| 7 | 2 | 41851-000110 | O-RING, P11.0 HNBR | 1 | | | | | | | |
| 8 | 1 | 172186-76390 | NIPPLE, ELBOW 1/4 | 1 | | | | | | | |
| 9 | 1 | 41851-000110 | O-RING, P11.0 HNBR | 2 | | | | | | | |
| 10 | 1 | 172B03-79211 | HOSE, H603BB029S | 1 | | | | | | | |
| 11 | 1 | 172B03-79230 | HOSE, F403BC041S | 1 | | | | | | | |
| 12 | 1 | 172B03-79240 | HOSE, F403BC047S | 1 | | | | | | | |
| 12-1 | 1 | 172B03-79241 | HOSE, F403BC050S | 1 | | | | | | N | |
| | (A=*2014.03) | | | | | | | | | | |
| 13 | 1 | 172B03-79250 | HOSE, G804YY134S | 1 | | | | | | | |
| 14 | 1 | 23000-013000 | CLAMP, 13 | 2 | | | | | | | |

N:Old $\overset{\text{Yes}}{\underset{\text{No}}{\leftrightarrows}}$ New, Q:Old $\overset{\text{No}}{\underset{\text{Yes}}{\leftrightarrows}}$ New, R:Old $\overset{\text{Yes}}{\underset{\text{Yes}}{\leftrightarrows}}$ New, S:Old $\overset{\text{No}}{\underset{\text{No}}{\leftrightarrows}}$ New, W:Add, Z:Discontinued, F:Interchangeable by set, K:Q'ty Change

Copyright (C) YANMAR GLOBAL CS CO., LTD. All RightsReserved.

# Fig.103. QUICK COUPLER(BODY)



(A)=VIO30-6B P(KR)
(B)=
(C)=
(D)=
(E)=
(F)=

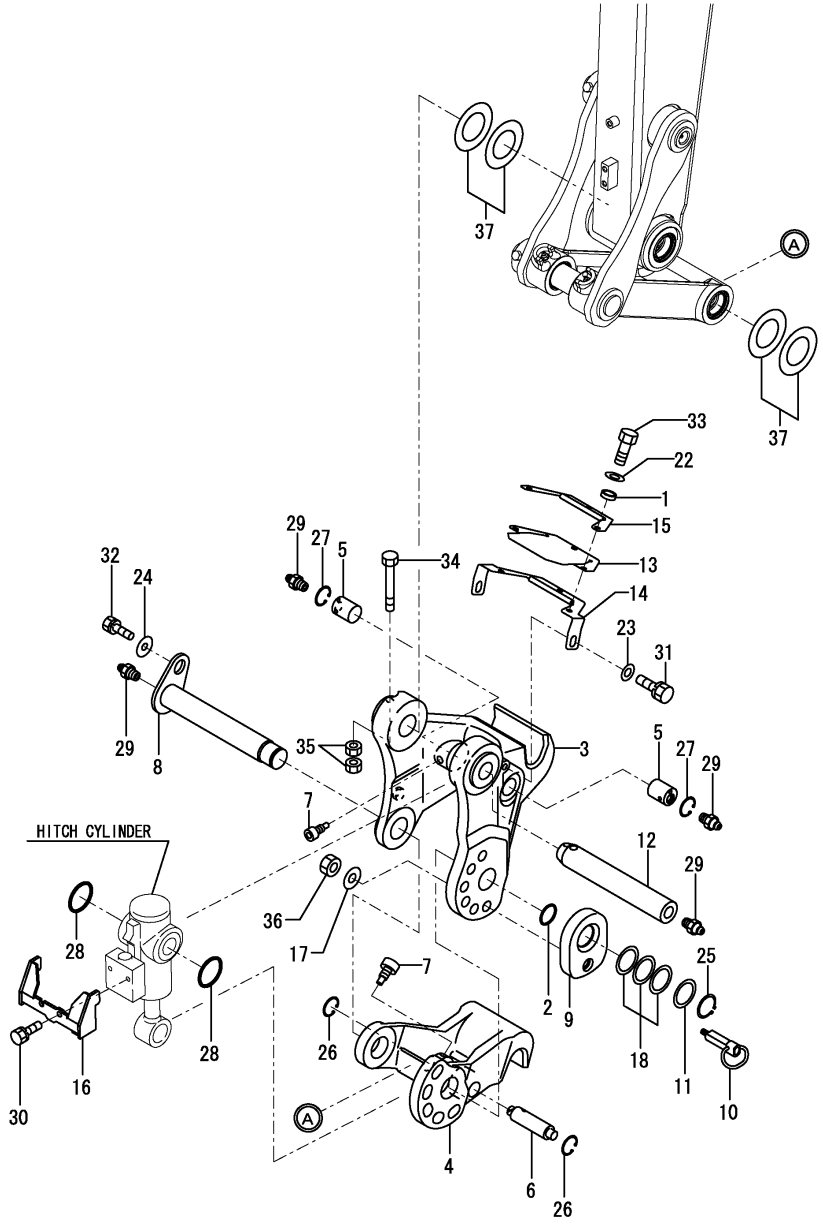


| No. | Lev. | Parts No. | Description | Q'ty (A) | (B) | (C) | (D) | (E) | (F) | I | R |
|---|---|---|---|---|---|---|---|---|---|---|---|
| 1 | 1 | 172958-17121 | COLLAR, 9X4 | 3 | | | | | | | |
| 2 | 1 | 172124-46200 | O-RING, 27.6X5.7 | 1 | | | | | | | |
| 3 | 1 | 172958-83102-Y | BRACKET, A | 1 | | | | | | | |
| 4 | 1 | 172958-83111-Y | BRACKET, B | 1 | | | | | | | |
| 5 | 1 | 172958-83120 | PIN, 30X37 | 2 | | | | | | | |
| 6 | 1 | 172958-83131 | PIN, 25X86 | 1 | | | | | | | |
| 7 | 1 | 172958-83140 | BOLT, HEX SOCKET | 3 | | | | | | | |
| 8 | 1 | 172958-83150 | PIN ASSY, 38X237 | 1 | | | | | | | |
| 9 | 1 | 172958-83171-Y | PLATE, LOCK | 1 | | | | | | | |
| 10 | 1 | 172958-83183 | PIN ASSY, LOCK | 1 | | | | | | | |
| 11 | 1 | 172960-83210 | COLLAR, 35.5X55X1.6 | 1 | | | | | | | |
| 12 | 1 | 172958-83220 | PIN, 38X242 | 1 | | | | | | | |
| 13 | 1 | 172958-83252 | PLATE, RUBBER | 1 | | | | | | | |
| 14 | 1 | 172958-83271-Y | GUARD ASSY | 1 | | | | | | | |
| 15 | 1 | 172958-83281-Y | GUARD ASSY | 1 | | | | | | | |
| 16 | 1 | 172958-83292-Y | COVER, HITCH | 1 | | | | | | | |
| 17 | 1 | 172958-83330 | WASHER, 6.4X15.5X1.5 | 1 | | | | | | | |
| 18 | 1 | 172141-84601 | SHIM ASSY, 35 | 1 | | | | | | | |
| 22 | 1 | 22137-080000 | WASHER, 8 | 3 | | | | | | | |
| 23 | 1 | 22137-100000 | WASHER, 10 | 2 | | | | | | | |
| 24 | 1 | 22157-120000 | WASHER, 12 | 1 | | | | | | | |
| 25 | 1 | 22242-000350 | RING, 35 | 1 | | | | | | | |
| 26 | 1 | 22252-000250 | RING, 25 | 2 | | | | | | | |
| 27 | 1 | 22252-000300 | RING, 30 | 2 | | | | | | | |
| 28 | 1 | 24311-000480 | O-RING, 1AP48.0 | 2 | | | | | | | |
| 29 | 1 | 24761-020000 | NIPPLE, GREASE PT1/8 | 4 | | | | | | | |
| 30 | 1 | 26013-080162 | BOLT, M8X 16 | 2 | | | | | | | |
| 31 | 1 | 26013-100202 | BOLT, M10X 20 | 2 | | | | | | | |
| 32 | 1 | 26013-120302 | BOLT, M12X 30 | 1 | | | | | | | |
| 33 | 1 | 26116-080202 | BOLT, M8X 20 PLATED | 3 | | | | | | | |
| 34 | 1 | 26116-100802 | BOLT, M10X 80 PLATED | 1 | | | | | | | |
| 35 | 1 | 26716-100002 | NUT, M10 | 2 | | | | | | | |
| 36 | 1 | 26756-060002 | NUT, LOCK M6 | 1 | | | | | | | |
| 37 | 1 | 933171-29751 | SHIM ASSY, PIN 38 | 2 | | | | | | | |

N:Old $\overset{\text{Yes}}{\underset{\text{No}}{\rightleftarrows}}$ New, Q:Old $\overset{\text{No}}{\underset{\text{Yes}}{\rightleftarrows}}$ New, R:Old $\overset{\text{Yes}}{\underset{\text{Yes}}{\rightleftarrows}}$ New, S:Old $\overset{\text{No}}{\underset{\text{No}}{\rightleftarrows}}$ New, W:Add, Z:Discontinued, F:Interchangeable by set, K:Q'ty Change

Copyright (C) YANMAR GLOBAL CS CO., LTD. All RightsReserved.

# Fig.104. BOOM BRACKET



(A)=VIO30-6B P(KR)
(B)=
(C)=
(D)=
(E)=
(F)=

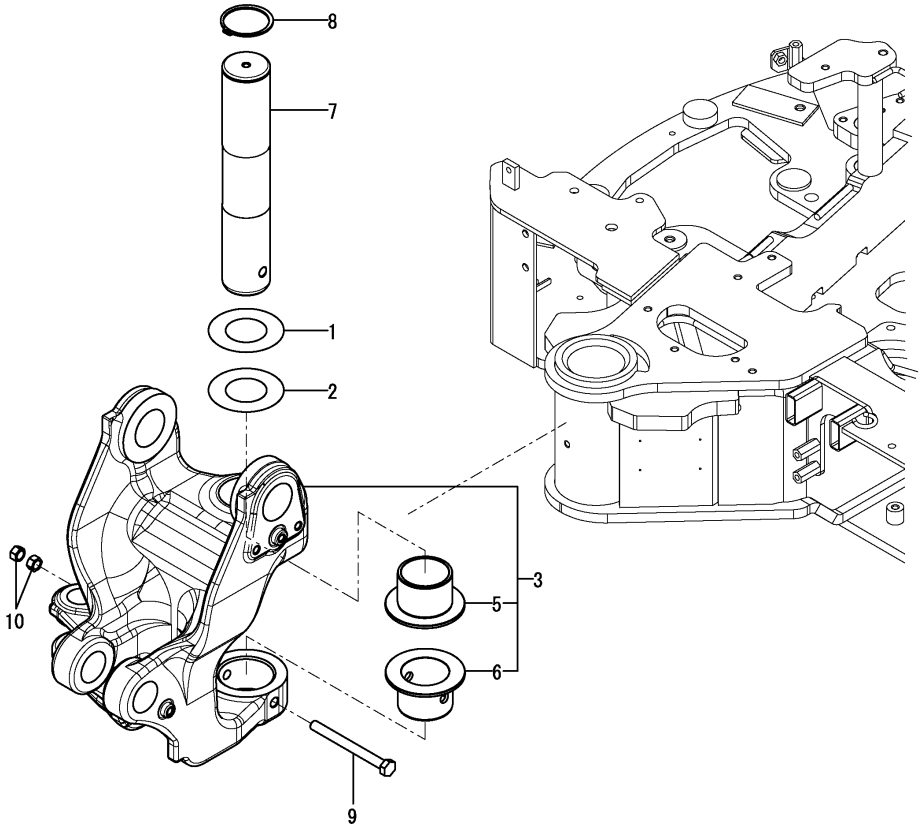


| No. | Lev. | Parts No. | Description | Q'ty (A) | (B) | (C) | (D) | (E) | (F) | I | R |
|---|---|---|---|---|---|---|---|---|---|---|---|
| 1 | 1 | 172176-81700 | SHIM, 70X120X0.8 | 1 | | | | | | | |
| 2 | 1 | 172176-81710 | SHIM, 70X120X0.5 | 1 | | | | | | | |
| 3 | 1 | 172B02-82300 | BRACKET ASSY, BOOM | 1 | | | | | | | |
| 5 | 2 | 172148-82320 | BUSH, 70X60 | 1 | | | | | | | |
| 6 | 2 | 172459-82320 | BUSH, 80X70 | 1 | | | | | | | |
| 7 | 1 | 172B02-82350 | PIN, 70X345 | 1 | | | | | | | |
| 8 | 1 | 22242-000700 | RING, 70 | 1 | | | | | | | |
| 9 | 1 | 26206-141502 | BOLT, M14X150 PLATED | 1 | | | | | | | |
| 10 | 1 | 26716-140002 | NUT, M14 | 2 | | | | | | | |

N:Old $\overset{\text{Yes}}{\underset{\text{No}}{\rightleftarrows}}$ New, Q:Old $\overset{\text{No}}{\underset{\text{Yes}}{\rightleftarrows}}$ New, R:Old $\overset{\text{Yes}}{\underset{\text{Yes}}{\rightleftarrows}}$ New, S:Old $\overset{\text{No}}{\underset{\text{No}}{\rightleftarrows}}$ New, W:Add, Z:Discontinued, F:Interchangeable by set, K:Q'ty Change

Copyright (C) YANMAR GLOBAL CS CO., LTD. All RightsReserved.

# Fig.105. BOOM



(A)=VIO30-6B P(KR)
(B)=
(C)=
(D)=
(E)=
(F)=

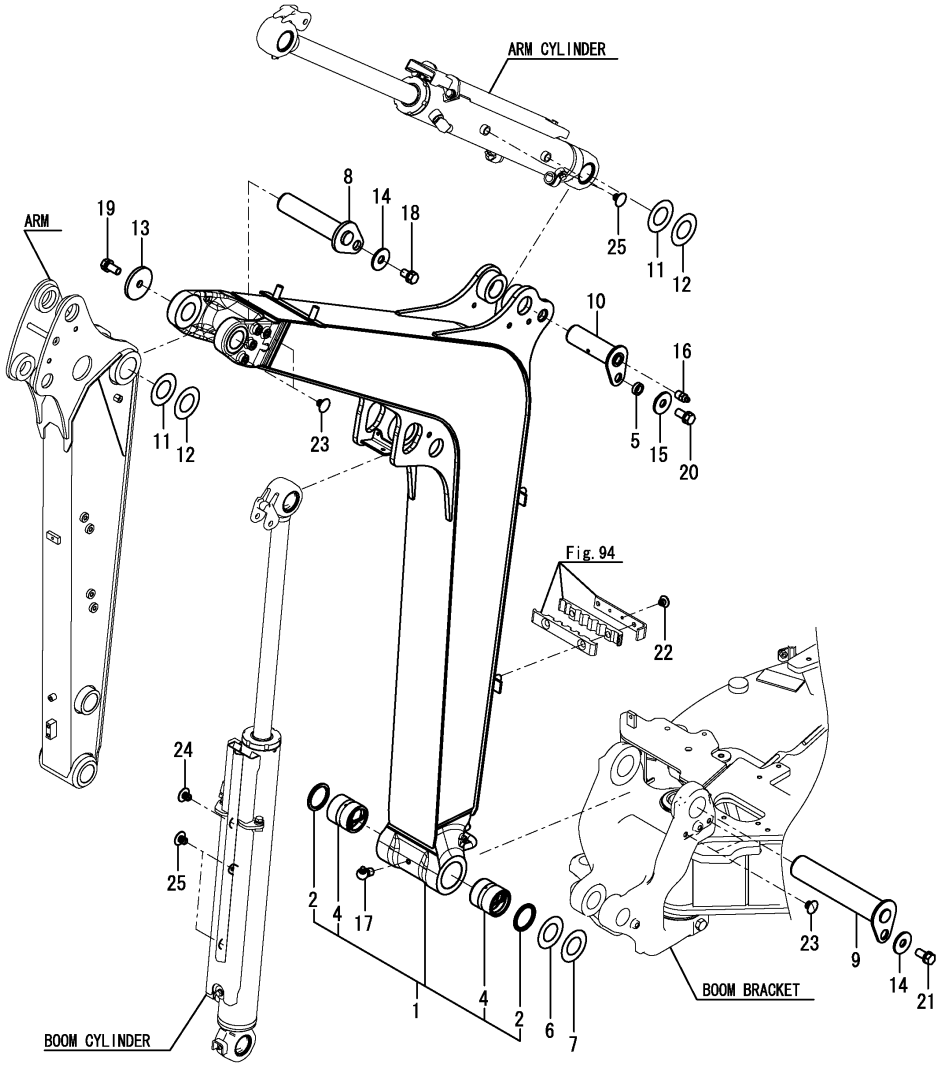


| No. | Lev. | Parts No. | Description | Q'ty (A) | (B) | (C) | (D) | (E) | (F) | I | R |
|---|---|---|---|---|---|---|---|---|---|---|---|
| 1 | 1 | 172B02-81100 | BOOM ASSY | 1 | | | | | | | |
| 2 | 2 | 172020-10620 | SEAL, DUST 60X75X5 | 2 | | | | | | | |
| 4 | 2 | 172460-81400 | BUSH, 60X75 | 2 | | | | | | | |
| 5 | 1 | 172164-81670 | SPACER | 1 | | | | | | | |
| 6 | 1 | 172175-81700 | SHIM, 60X110X0.8 | 1 | | | | | | | |
| 7 | 1 | 172175-81710 | SHIM, 60X110X0.5 | 1 | | | | | | | |
| 8 | 1 | 172B03-81780 | PIN ASSY, 50X219 | 1 | | | | | | | |
| 9 | 1 | 172B03-81800 | PIN ASSY, 60X310 | 1 | | | | | | | |
| 10 | 1 | 172B03-81820 | PIN ASSY, 50X158 A | 1 | | | | | | | |
| 11 | 1 | 172165-82520 | SHIM, 50X90X0.5 | 2 | | | | | | | |
| 12 | 1 | 172165-82530 | SHIM, 50X90X1.2 | 2 | | | | | | | |
| 13 | 1 | 172146-82910 | SPACER | 1 | | | | | | | |
| 14 | 1 | 22157-120000 | WASHER, 12 | 2 | | | | | | | |
| 15 | 1 | 22157-120000 | WASHER, 12 | 1 | | | | | | | |
| 16 | 1 | 24761-020000 | NIPPLE, GREASE PT1/8 | 1 | | | | | | | |
| 17 | 1 | 24761-040000 | NIPPLE, GREASE B | 1 | | | | | | | |
| 18 | 1 | 26013-120202 | BOLT, M12X 20 | 1 | | | | | | | |
| 19 | 1 | 26013-120252 | BOLT, M12X 25 | 1 | | | | | | | |
| 20 | 1 | 26013-120252 | BOLT, M12X 25 | 1 | | | | | | | |
| 21 | 1 | 26013-120252 | BOLT, M12X 25 | 1 | | | | | | | |
| 22 | 1 | 172444-17660 | CLIP, TREE 8 | 2 | | | | | | | |
| 23 | 1 | 172176-68210 | CLIP, TREE D25XL15 | 4 | | | | | | | |
| 24 | 1 | 172183-81160 | CLIP, TREE 9.5 | 1 | | | | | | | |
| 25 | 1 | 172183-81160 | CLIP, TREE 9.5 | 4 | | | | | | | |

N:Old $\overset{\text{Yes}}{\underset{\text{No}}{\rightleftarrows}}$ New, Q:Old $\overset{\text{No}}{\underset{\text{Yes}}{\rightleftarrows}}$ New, R:Old $\overset{\text{Yes}}{\underset{\text{Yes}}{\rightleftarrows}}$ New, S:Old $\overset{\text{No}}{\underset{\text{No}}{\rightleftarrows}}$ New, W:Add, Z:Discontinued, F:Interchangeable by set, K:Q'ty Change

Copyright (C) YANMAR GLOBAL CS CO., LTD. All RightsReserved.

# Fig.106. ARM



(A)=VIO30-6B P(KR)
(B)=
(C)=
(D)=
(E)=
(F)=

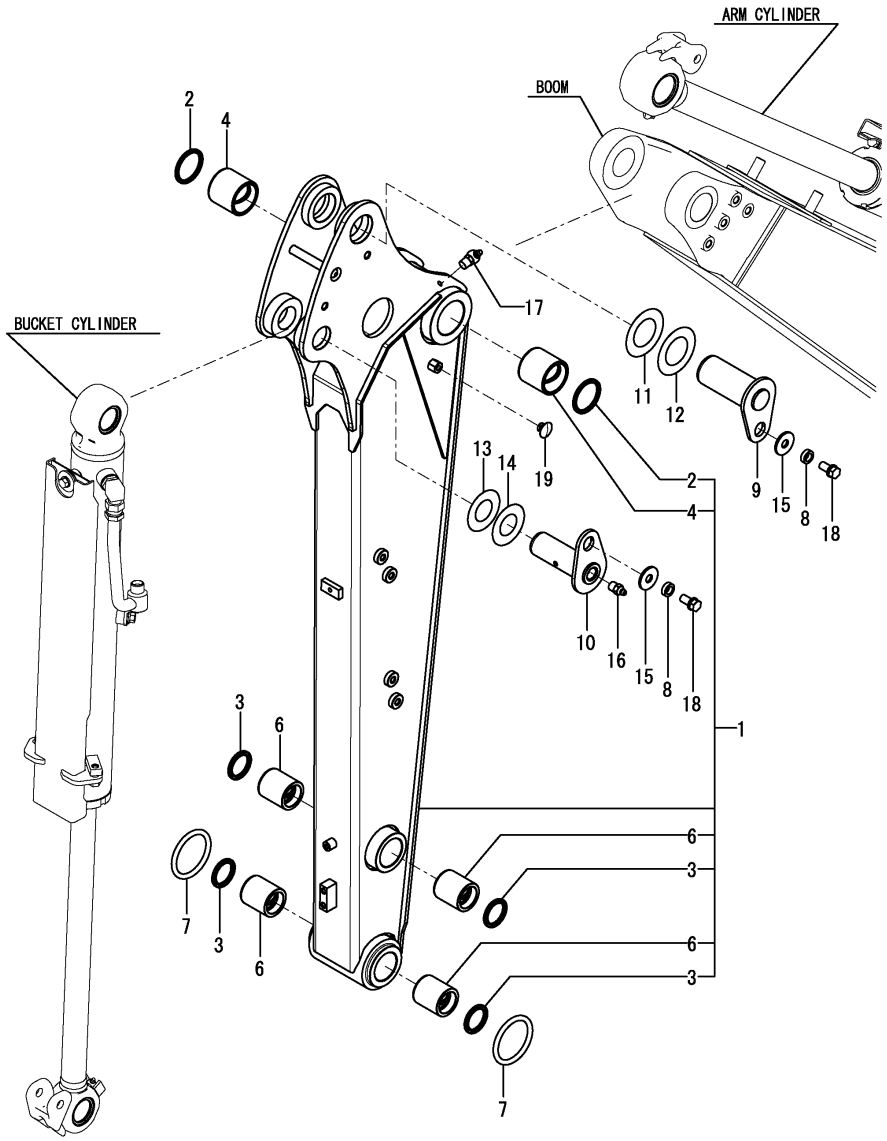


| No. | Lev. | Parts No. | Description | Q'ty (A) | (B) | (C) | (D) | (E) | (F) | I | R |
|---|---|---|---|---|---|---|---|---|---|---|---|
| 1 | 1 | 172B02-81500 | ARM ASSY, 1220 | 1 | | | | | | | |
| 2 | 2 | 172448-54120 | SEAL, DUST 50X60X4 | 2 | | | | | | | |
| 3 | 2 | 172168-81270 | SEAL, DUST 38X50X4 | 4 | | | | | | | |
| 4 | 2 | 172444-81310 | BUSH, PIN 50X55 | 2 | | | | | | | |
| 6 | 2 | 172458-81630 | BUSH, 38-55 | 4 | | | | | | | |
| 7 | 1 | 172142-81620 | O-RING, 71 | 2 | | | | | | | |
| 8 | 1 | 172164-81670 | SPACER | 2 | | | | | | | |
| 9 | 1 | 172B03-81871 | PIN ASSY, 50X114 | 1 | | | | | | | |
| 10 | 1 | 172B03-81920 | PIN ASSY, 40X114 | 1 | | | | | | | |
| 11 | 1 | 172165-82520 | SHIM, 50X90X0.5 | 1 | | | | | | | |
| 12 | 1 | 172165-82530 | SHIM, 50X90X1.2 | 1 | | | | | | | |
| 13 | 1 | 172165-82580 | SHIM, 40X75X0.5 | 1 | | | | | | | |
| 14 | 1 | 172165-82590 | SHIM, 40X75X1.2 | 1 | | | | | | | |
| 15 | 1 | 22157-120000 | WASHER, 12 | 2 | | | | | | | |
| 16 | 1 | 24761-020000 | NIPPLE, GREASE PT1/8 | 1 | | | | | | | |
| 17 | 1 | 24761-040000 | NIPPLE, GREASE B | 1 | | | | | | | |
| 18 | 1 | 26013-120252 | BOLT, M12X 25 | 2 | | | | | | | |
| 19 | 1 | 172183-81160 | CLIP, TREE 9.5 | 1 | | | | | | | |

N:Old $\overset{\text{Yes}}{\underset{\text{No}}{\leftrightarrows}}$ New, Q:Old $\overset{\text{No}}{\underset{\text{Yes}}{\leftrightarrows}}$ New, R:Old $\overset{\text{Yes}}{\underset{\text{Yes}}{\leftrightarrows}}$ New, S:Old $\overset{\text{No}}{\underset{\text{No}}{\leftrightarrows}}$ New, W:Add, Z:Discontinued, F:Interchangeable by set, K:Q'ty Change

Copyright (C) YANMAR GLOBAL CS CO., LTD. All RightsReserved.

# Fig.107. BUCKET ARM & LINK



(A)=VIO30-6B P(KR)
(B)=
(C)=
(D)=
(E)=
(F)=

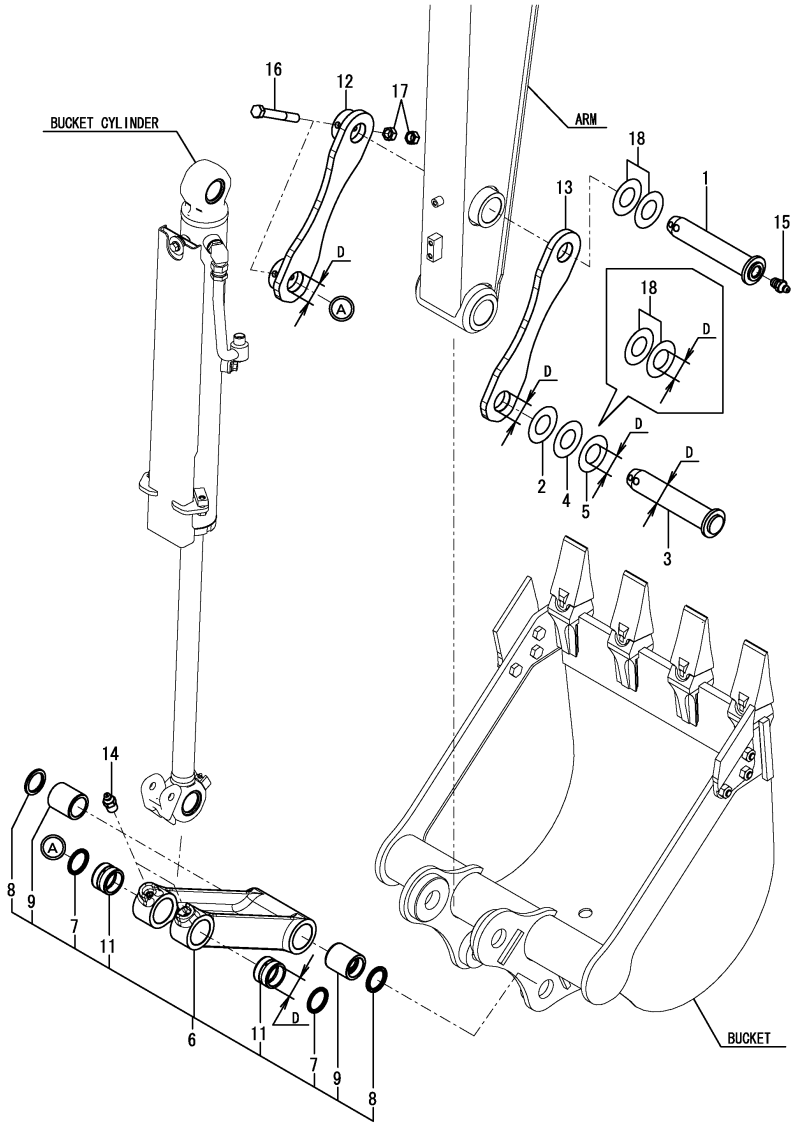


| No. | Lev. | Parts No. | Description | Q'ty (A) | (B) | (C) | (D) | (E) | (F) | I | R |
|---|---|---|---|---|---|---|---|---|---|---|---|
| 1 | 1 | 172B03-81851 | PIN ASSY, 38X182 P | 1 | | | | | | | |
| 2 | 1 | 172A25-81900 | SHIM, 40X75X0.8 | 1 | | | | | | Z | 1 |
| | (A=M60505) | | | | | | | | | | |
| 3 | 1 | 172B03-81901 | PIN ASSY, 40X182 | 1 | | | | | | | |
| 3-1 | 1 | 172B03-81902 | PIN ASSY, 38X182 P A | 1 | | | | | | S | 1 |
| | (A=M60505) | | | | | | | | | | |
| 4 | 1 | 172165-82580 | SHIM, 40X75X0.5 | 1 | | | | | | Z | 1 |
| | (A=M60505) | | | | | | | | | | |
| 5 | 1 | 172165-82590 | SHIM, 40X75X1.2 | 1 | | | | | | Z | 1 |
| | (A=M60505) | | | | | | | | | | |
| 6 | 1 | 172B03-82600 | LINK ASSY, BUCKET | 1 | | | | | | | |
| 6-1 | 1 | 172B03-82601 | LINK ASSY, BUCKET | 1 | | | | | | S | 1 |
| | (A=M60505) | | | | | | | | | | |
| 7 | 2 | 172448-72650 | SEAL, DUST 40X50X4 | 4 | | | | | | | |
| 7-1 | 2 | 172168-81270 | SEAL, DUST 38X50X4 | 4 | | | | | | S | 1 |
| | (A=M60505) | | | | | | | | | | |
| 8 | 2 | 172168-81270 | SEAL, DUST 38X50X4 | 2 | | | | | | | |
| 9 | 2 | 172458-81630 | BUSH, 38-55 | 2 | | | | | | | |
| 11 | 2 | 172B03-82620 | BUSH, 40X50X33.5 | 2 | | | | | | | |
| 11-1 | 2 | 172B03-82621 | BUSH, 38X50X33.5 | 2 | | | | | | S | 1 |
| | (A=M60505) | | | | | | | | | | |
| 12 | 1 | 172B03-82651 | PLATE ASSY, ARM R | 1 | | | | | | | |
| 12-1 | 1 | 172458-82600-Y | ARM ASSY, BUCKET R | 1 | | | | | | S | 1 |
| | (A=M60505) | | | | | | | | | | |
| 13 | 1 | 172B03-82661 | PLATE, BUCKET ARM | 1 | | | | | | | |
| 13-1 | 1 | 172164-81820-Y | ARM, BUCKET | 1 | | | | | | S | 1 |
| | (A=M60505) | | | | | | | | | | |
| 14 | 1 | 24761-020000 | NIPPLE, GREASE PT1/8 | 2 | | | | | | | |
| 15 | 1 | 24761-020000 | NIPPLE, GREASE PT1/8 | 1 | | | | | | | |
| 16 | 1 | 26116-100752 | BOLT, M10X 75 PLATED | 2 | | | | | | | |
| 17 | 1 | 26716-100002 | NUT, M10 | 4 | | | | | | | |
| 18 | 1 | 933171-29751 | SHIM ASSY, PIN 38 | 2 | | | | | | | 1 |

Remarks
(1)D=Ref.No.2,3,4,5,6,7,11,12,13
:40mm,
Ref.No.3-1,6-1,7-1,11-1,12-1,
13-1,18:38mm.

N:Old $\overset{\text{Yes}}{\underset{\text{No}}{\leftrightarrows}}$ New, Q:Old $\overset{\text{No}}{\underset{\text{Yes}}{\leftrightarrows}}$ New, R:Old $\overset{\text{Yes}}{\underset{\text{Yes}}{\leftrightarrows}}$ New, S:Old $\overset{\text{No}}{\underset{\text{No}}{\leftrightarrows}}$ New, W:Add, Z:Discontinued, F:Interchangeable by set, K:Q'ty Change

Copyright (C) YANMAR GLOBAL CS CO., LTD. All RightsReserved.

# Fig.108. BLADE



(A)=VIO30-6B P(KR)
(B)=
(C)=
(D)=
(E)=
(F)=

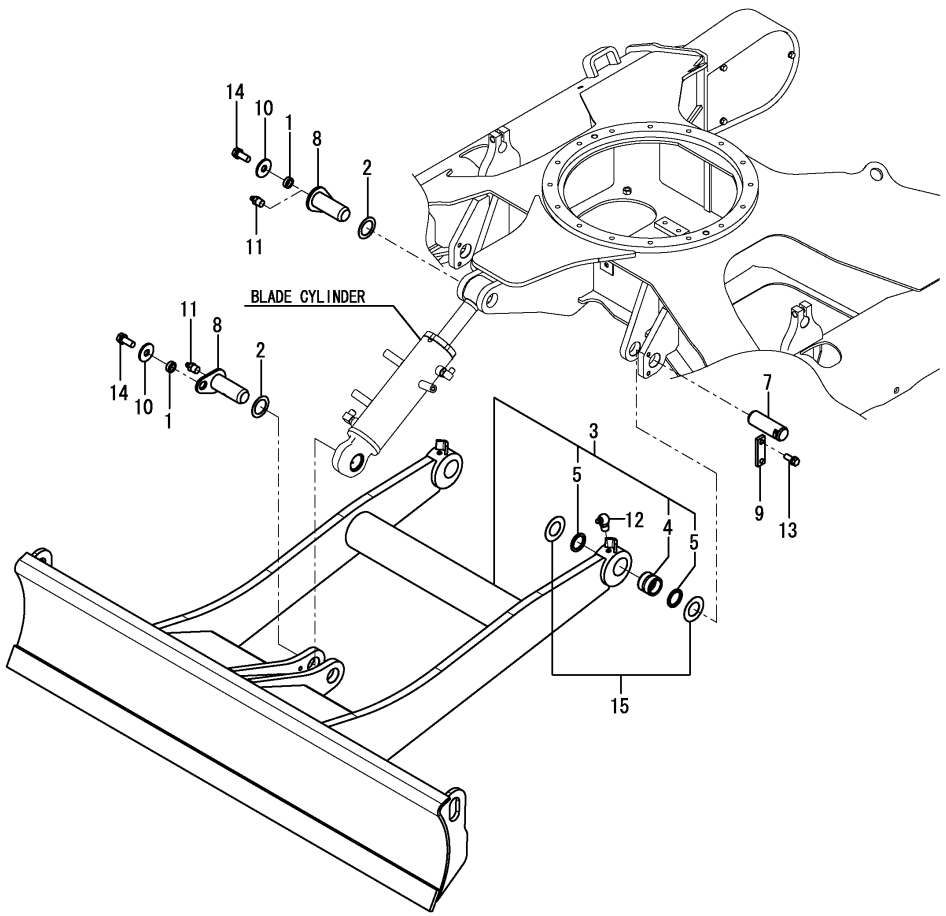


| No. | Lev. | Parts No. | Description | Q'ty (A) | (B) | (C) | (D) | (E) | (F) | I | R |
|---|---|---|---|---|---|---|---|---|---|---|---|
| 1 | 1 | 172164-81670 | SPACER | 2 | | | | | | | |
| 2 | 1 | 172112-87860 | SHIM, PIN 40X1 | 2 | | | | | | | |
| 3 | 1 | 172B02-94100 | BLADE ASSY | 1 | | | | | | | |
| 4 | 2 | 172168-72240 | BUSH, 38-50-40 | 2 | | | | | | | |
| 5 | 2 | 172168-81270 | SEAL, DUST 38X50X4 | 4 | | | | | | | |
| 7 | 1 | 172422-94210 | PIN, 38X114 | 2 | | | | | | | |
| 8 | 1 | 172142-94241 | PIN ASSY, 40X103 B | 2 | | | | | | | |
| 9 | 1 | 172124-94310-5 | PLATE, LOCK | 2 | | | | | | | |
| 10 | 1 | 22157-120000 | WASHER, 12 | 2 | | | | | | | |
| 11 | 1 | 24761-020000 | NIPPLE, GREASE PT1/8 | 2 | | | | | | | |
| 12 | 1 | 24761-040000 | NIPPLE, GREASE B | 2 | | | | | | | |
| 13 | 1 | 26013-100252 | BOLT, M10X 25 | 4 | | | | | | | |
| 14 | 1 | 26013-120302 | BOLT, M12X 30 | 2 | | | | | | | |
| 15 | 1 | 933171-29751 | SHIM ASSY, PIN 38 | 2 | | | | | | | |

N:Old $\overset{\text{Yes}}{\underset{\text{No}}{\rightleftarrows}}$ New, Q:Old $\overset{\text{No}}{\underset{\text{Yes}}{\rightleftarrows}}$ New, R:Old $\overset{\text{Yes}}{\underset{\text{Yes}}{\rightleftarrows}}$ New, S:Old $\overset{\text{No}}{\underset{\text{No}}{\rightleftarrows}}$ New, W:Add, Z:Discontinued, F:Interchangeable by set, K:Q'ty Change

Copyright (C) YANMAR GLOBAL CS CO., LTD. All RightsReserved.

# Fig.109. REMOTE CONTROLLER KIT(OPTIONAL)



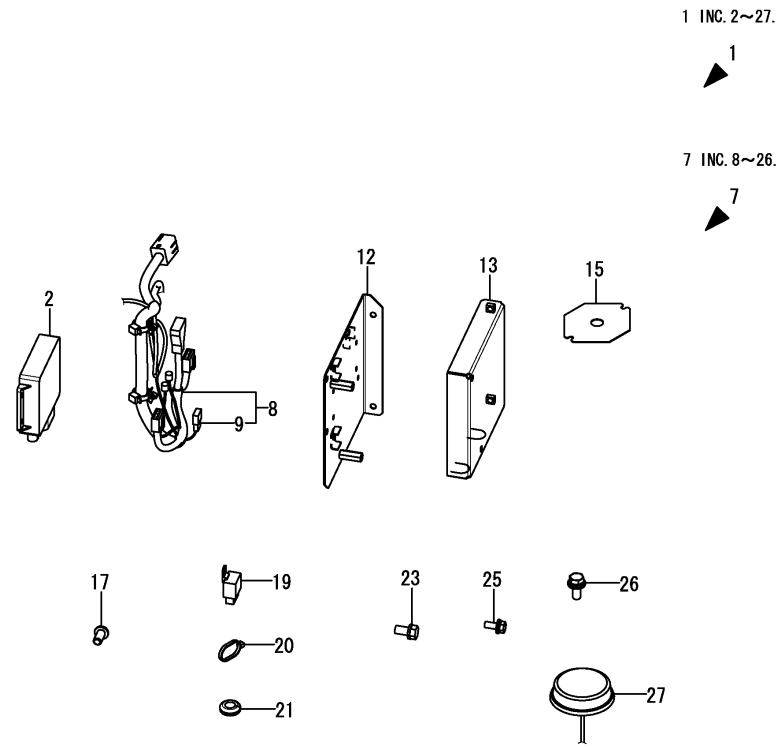


(A)=VIO30-6B P(KR)
(B)=
(C)=
(D)=
(E)=
(F)=

| No. | Lev. | Parts No. | Description | Q'ty (A) | (B) | (C) | (D) | (E) | (F) | I | R |
|---|---|---|---|---|---|---|---|---|---|---|---|
| 1 | 1 (A=MXXXXX) | 172B03-08310 | CONTROLLER KIT, EX | 1 | | | | | | W | |
| 2 | 2 | 1RF001-00021 | CONTROLLER, MOBILE | 1 | | | | | | | |
| 7 | 2 | 172B03-16000 | PARTS ASSY, GPS | 1 | | | | | | | |
| 8 | 3 | 172B03-16620 | HARNESS ASSY, GPS | 1 | | | | | | | |
| 9 | 4 | 172648-16600 | DIODE, 1.5-2P | 1 | | | | | | | |
| 12 | 3 | 172B03-17831 | BRACKET ASSY, GPS | 1 | | | | | | | |
| 13 | 3 | 172B03-17851 | COVER ASSY, GPS | 1 | | | | | | | |
| 15 | 3 | 172B03-17980 | PLATE, ANTENNA | 1 | | | | | | | |
| 17 | 3 | 172186-45840 | BOLT, BUTTON 8X16 | 4 | | | | | | | |
| 19 | 3 | 198461-52950 | RELAY, CA TYPE C | 2 | | | | | | | |
| 20 | 3 | 194202-56460 | BAND, BINDING 200 | 2 | | | | | | | |
| 21 | 3 | 172137-62970 | GROMMET, 16 | 2 | | | | | | | |
| 23 | 3 | 26013-080162 | BOLT, M8X 16 | 3 | | | | | | | |
| 25 | 3 | 26014-060162 | BOLT, M6X 16 | 6 | | | | | | | |
| 26 | 3 | 26014-060162 | BOLT, M6X 16 | 2 | | | | | | | |
| 27 | 2 | 1RF001-93000 | ANTENNA, MOBILE | 1 | | | | | | | |

N:Old $\overset{\text{Yes}}{\underset{\text{No}}{\leftrightarrows}}$ New, Q:Old $\overset{\text{No}}{\underset{\text{Yes}}{\leftrightarrows}}$ New, R:Old $\overset{\text{Yes}}{\underset{\text{Yes}}{\leftrightarrows}}$ New, S:Old $\overset{\text{No}}{\underset{\text{No}}{\leftrightarrows}}$ New, W:Add, Z:Discontinued, F:Interchangeable by set, K:Q'ty Change

Copyright (C) YANMAR GLOBAL CS CO., LTD. All RightsReserved.

# Fig.110. REARVIEW MIRROR KIT(OPTIONAL)



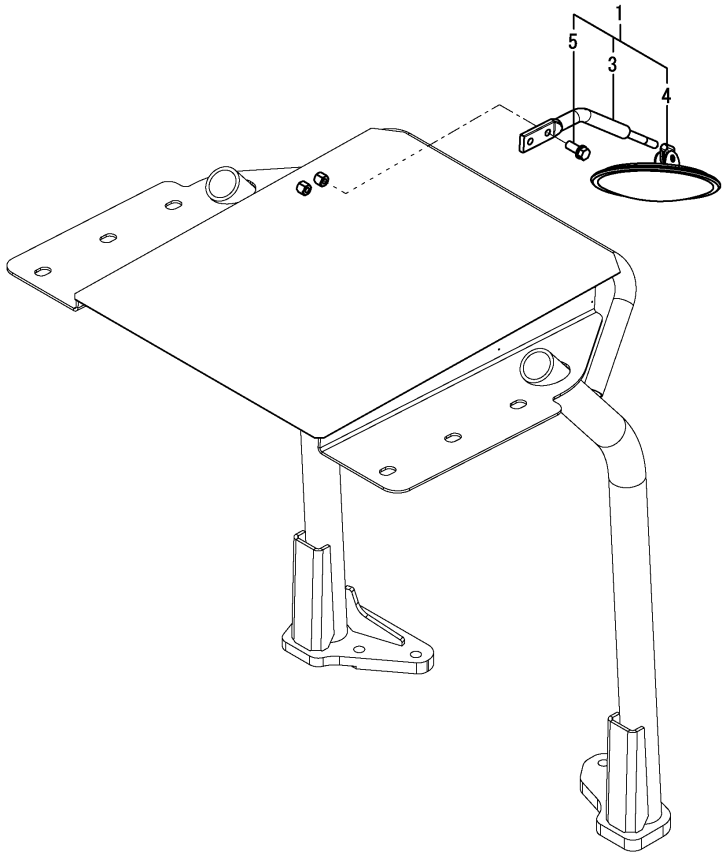


(A)=VIO30-6B P(KR)
(B)=
(C)=
(D)=
(E)=
(F)=

| No. | Lev. | Parts No. | Description | Q'ty (A) | (B) | (C) | (D) | (E) | (F) | I | R |
|---|---|---|---|---|---|---|---|---|---|---|---|
| 1 | 1 | 172B03-08550 | MIRROR KIT, REARVIEW | 1 | | | | | | W | |
| | (A=MXXXXX) | | | | | | | | | | |
| 3 | 3 | 172B03-67410 | BRACKET ASSY, MIRROR | 1 | | | | | | | |
| 4 | 3 | 172A25-68500 | MIRROR, REARVIEW | 1 | | | | | | | |
| 5 | 3 | 26013-100252 | BOLT, M10X 25 | 2 | | | | | | | |

N:Old $\overset{\text{Yes}}{\underset{\text{No}}{\leftrightarrows}}$ New, Q:Old $\overset{\text{No}}{\underset{\text{Yes}}{\leftrightarrows}}$ New, R:Old $\overset{\text{Yes}}{\underset{\text{Yes}}{\leftrightarrows}}$ New, S:Old $\overset{\text{No}}{\underset{\text{No}}{\leftrightarrows}}$ New, W:Add, Z:Discontinued, F:Interchangeable by set, K:Q'ty Change

Copyright (C) YANMAR GLOBAL CS CO., LTD. All RightsReserved.

# Fig.111. P.T.O. OVER LOAD VALVE KIT(OPTIONAL)

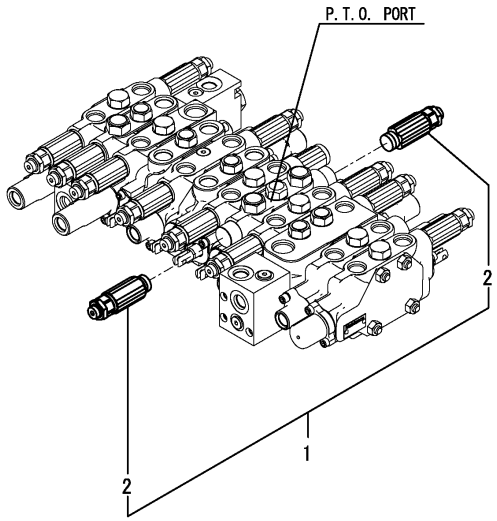




(A)=VIO30-6B P(KR)
(B)=
(C)=
(D)=
(E)=
(F)=

| No. | Lev. | Parts No. | Description | Q'ty (A) | (B) | (C) | (D) | (E) | (F) | I | R |
|---|---|---|---|---|---|---|---|---|---|---|---|
| 1 | 1 | 172B03-08590 | VALVE ASSY, OVERLOAD | 1 | | | | | | | |
| 2 | 2 | 172A47-75480 | VALVE ASSY, OVERLOAD | 2 | | | | | | | |

N:Old $\overset{\text{Yes}}{\underset{\text{No}}{\leftrightarrows}}$ New, Q:Old $\overset{\text{No}}{\underset{\text{Yes}}{\leftrightarrows}}$ New, R:Old $\overset{\text{Yes}}{\underset{\text{Yes}}{\leftrightarrows}}$ New, S:Old $\overset{\text{No}}{\underset{\text{No}}{\leftrightarrows}}$ New, W:Add, Z:Discontinued, F:Interchangeable by set, K:Q'ty Change

Copyright (C) YANMAR GLOBAL CS CO., LTD. All RightsReserved.

# Fig.112. ADDITIONAL WEIGHT KIT(OPTIONAL)



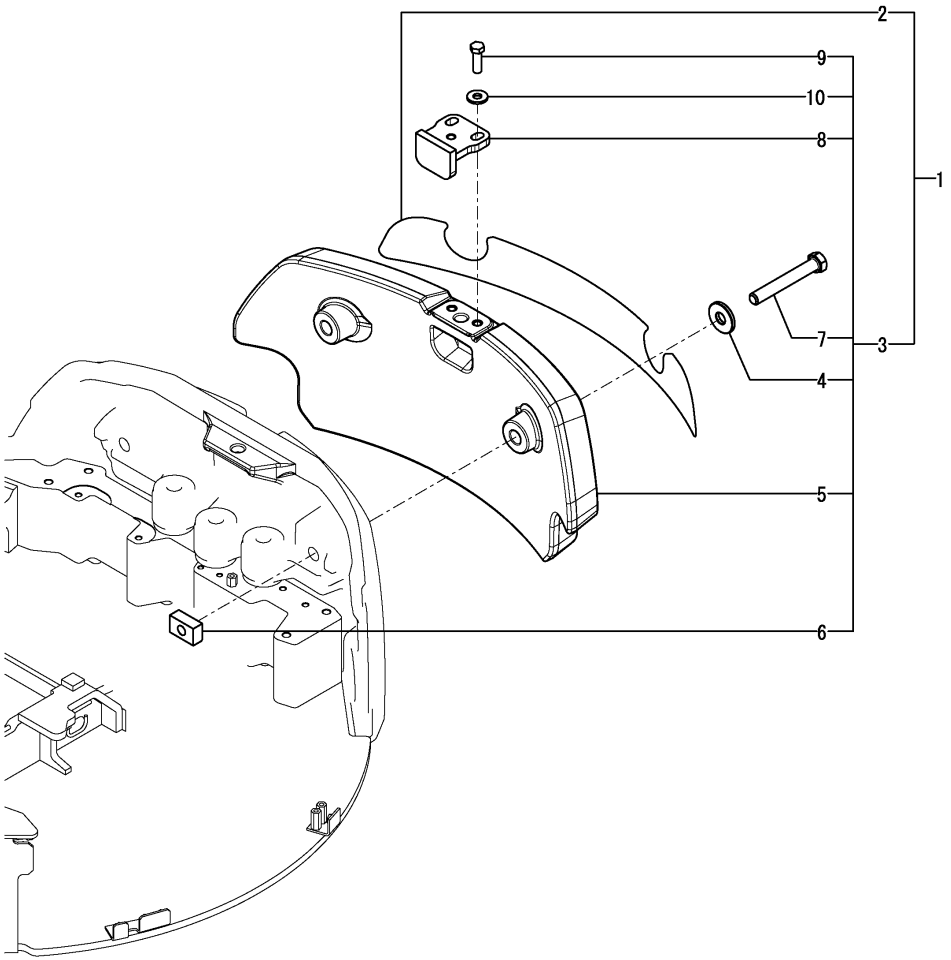


(A)=VIO30-6B P(KR)
(B)=
(C)=
(D)=
(E)=
(F)=

| No. | Lev. | Parts No. | Description | Q'ty (A) | (B) | (C) | (D) | (E) | (F) | I | R |
|---|---|---|---|---|---|---|---|---|---|---|---|
| 1 | 1 | 172B03-08680 | WEIGHT KIT, ADD | 1 | | | | | | | W |
| | (A=MXXXXX) | | | | | | | | | | |
| 2 | 2 | 172B03-03160 | LABEL, REAR | 1 | | | | | | | |
| 3 | 2 | 172B03-09200 | WEIGHT ASSY, ADD | 1 | | | | | | | |
| 4 | 3 | 172187-53321 | WASHER, 24.5X65X8 | 2 | | | | | | | |
| 5 | 3 | 172B03-53320 | WEIGHT, ADD 150 | 1 | | | | | | | |
| 6 | 3 | 172A46-53360 | NUT, M24 | 2 | | | | | | | |
| 7 | 3 | 172A48-53371 | BOLT, M24X170 | 2 | | | | | | | |
| 8 | 3 | 172B03-53410 | BRACKET ASSY, WEIGHT | 1 | | | | | | | |
| 9 | 3 | 26116-160502 | BOLT, M16X 50 PLATED | 2 | | | | | | | |
| 10 | 3 | 933147-08501 | WASHER, WHEEL SHAFT | 2 | | | | | | | |

N:Old $\overset{\text{Yes}}{\underset{\text{No}}{\leftrightarrows}}$ New, Q:Old $\overset{\text{No}}{\underset{\text{Yes}}{\leftrightarrows}}$ New, R:Old $\overset{\text{Yes}}{\underset{\text{Yes}}{\leftrightarrows}}$ New, S:Old $\overset{\text{No}}{\underset{\text{No}}{\leftrightarrows}}$ New, W:Add, Z:Discontinued, F:Interchangeable by set, K:Q'ty Change

Copyright (C) YANMAR GLOBAL CS CO., LTD. All RightsReserved.

# Fig.113. FRONT LAMP KIT(OPTIONAL)

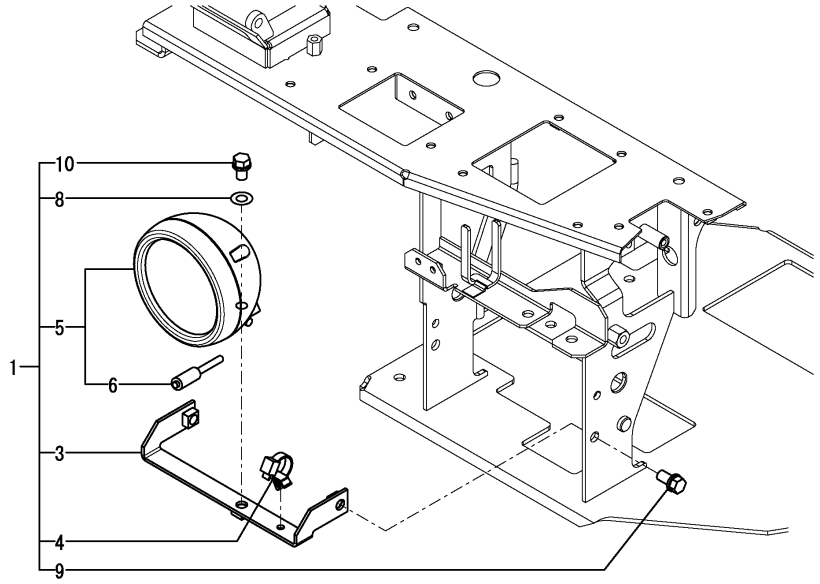


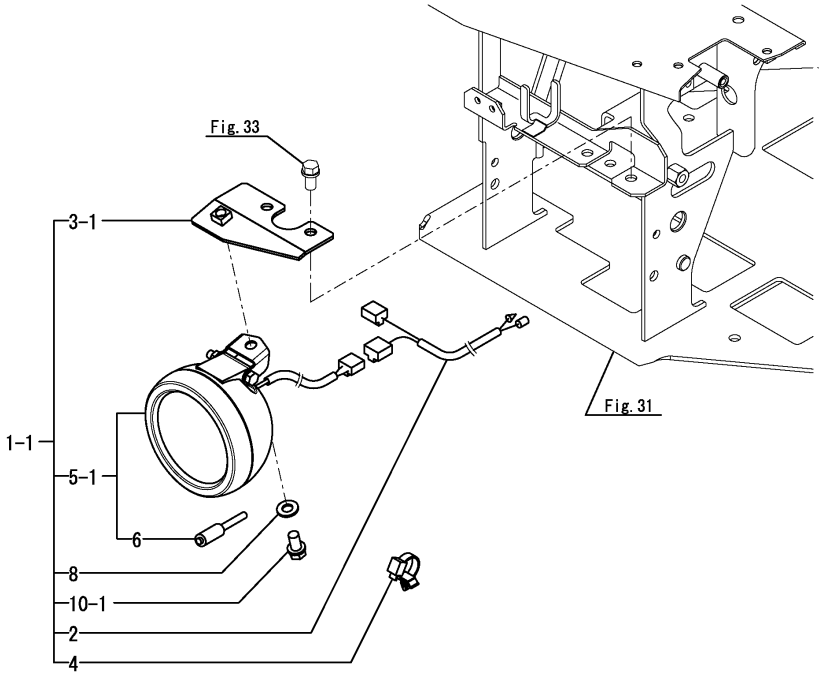


(A)=VIO30-6B P(KR)
(B)=
(C)=
(D)=
(E)=
(F)=

| No. | Lev. | Parts No. | Description | Q'ty (A) | (B) | (C) | (D) | (E) | (F) | I | R |
|---|---|---|---|---|---|---|---|---|---|---|---|
| 1 | 1 | 172B03-08690 | LAMP KIT, FRONT 2P | 1 | | | | | | W | |
| | (A=MXXXXX) | | | | | | | | | | |
| 1-1 | 1 | 172B03-08691 | LAMP KIT,FRONT 2P | 1 | | | | | | N | |
| | (A=M62138) | | | | | | | | | | |
| 2 | 3 | 172B03-16641 | HARNESS, LAMP A | 1 | | | | | | W | |
| | (A=M62138) | | | | | | | | | | |
| 3 | 3 | 172B03-17950 | STAY ASSY, LAMP | 1 | | | | | | | |
| 3-1 | 3 | 172B04-17920 | STAY ASSY, LAMP | 1 | | | | | | S | |
| | (A=M62138) | | | | | | | | | | |
| 4 | 3 | 194680-51670 | BAND, CLIP | 1 | | | | | | | |
| 5 | 3 | 1A7611-86351 | LAMP, WORK 55W | 1 | | | | | | | |
| 5-1 | 3 | 1A7611-86251 | LAMP, WORK 55W | 1 | | | | | | S | |
| | (A=M62138) | | | | | | | | | | |
| 6 | 4 | 1A7611-86270 | BULB, 12V-55W | 1 | | | | | | | |
| 8 | 3 | 22137-100000 | WASHER, 10 | 1 | | | | | | | |
| 9 | 3 | 26013-100202 | BOLT, M10X 20 | 2 | | | | | | Z | |
| | (A=M62138) | | | | | | | | | | |
| 10 | 3 | 26013-100252 | BOLT, M10X 25 | 1 | | | | | | | |
| 10-1 | 3 | 26013-100202 | BOLT, M10X 20 | 1 | | | | | | S | |
| | (A=M62138) | | | | | | | | | | |

N:Old $\overset{\text{Yes}}{\underset{\text{No}}{\rightleftarrows}}$ New, Q:Old $\overset{\text{No}}{\underset{\text{Yes}}{\rightleftarrows}}$ New, R:Old $\overset{\text{Yes}}{\underset{\text{Yes}}{\rightleftarrows}}$ New, S:Old $\overset{\text{No}}{\underset{\text{No}}{\rightleftarrows}}$ New, W:Add, Z:Discontinued, F:Interchangeable by set, K:Q'ty Change

Copyright (C) YANMAR GLOBAL CS CO., LTD. All RightsReserved.

# Fig.114. BUCKET LINK WITH HOOK(OPTIONAL)

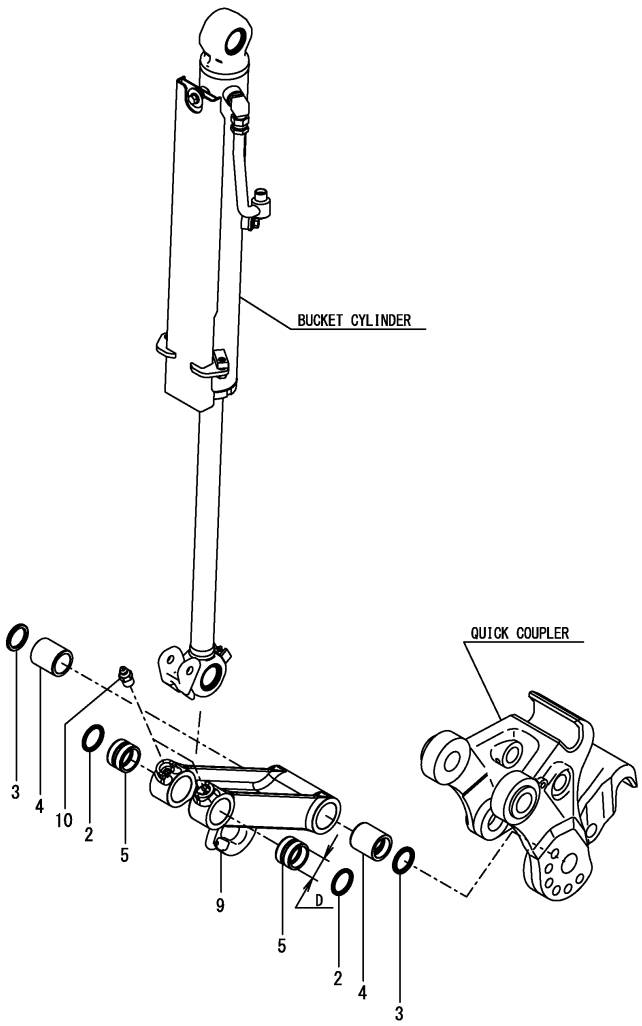


(A)=VIO30-6B P(KR)
(B)=
(C)=
(D)=
(E)=
(F)=

| No. | Lev. | Parts No. | Description | Q'ty (A) | (B) | (C) | (D) | (E) | (F) | I | R |
|---|---|---|---|---|---|---|---|---|---|---|---|
| 2 | 1 | 172448-72650 | SEAL, DUST 40X50X4 | 4 | | | | | | | |
| 2-1 | 1 (A=M60505) | 172168-81270 | SEAL, DUST 38X50X4 | 4 | | | | | | S | 1 |
| 3 | 1 | 172168-81270 | SEAL, DUST 38X50X4 | 2 | | | | | | | |
| 4 | 1 | 172458-81630 | BUSH, 38-55 | 2 | | | | | | | |
| 5 | 1 | 172B03-82620 | BUSH, 40X50X33.5 | 2 | | | | | | | |
| 5-1 | 1 (A=M60505) | 172B03-82621 | BUSH, 38X50X33.5 | 2 | | | | | | S | 1 |
| 9 | 1 | 172141-84710 | STOPPER, HOOK | 1 | | | | | | | |
| 10 | 1 | 24761-020000 | NIPPLE, GREASE PT1/8 | 2 | | | | | | | |

Remarks
(1)D=Ref.No.1,2,5:40mm,
Ref.No.1-1,2-1,5-1:38mm.

N:Old $\overset{\text{Yes}}{\underset{\text{No}}{\leftrightarrows}}$ New, Q:Old $\overset{\text{No}}{\underset{\text{Yes}}{\leftrightarrows}}$ New, R:Old $\overset{\text{Yes}}{\underset{\text{Yes}}{\leftrightarrows}}$ New, S:Old $\overset{\text{No}}{\underset{\text{No}}{\leftrightarrows}}$ New, W:Add, Z:Discontinued, F:Interchangeable by set, K:Q'ty Change

Copyright (C) YANMAR GLOBAL CS CO., LTD. All RightsReserved.

# Fig.115. TRAVEL ALARM KIT(OPTIONAL)



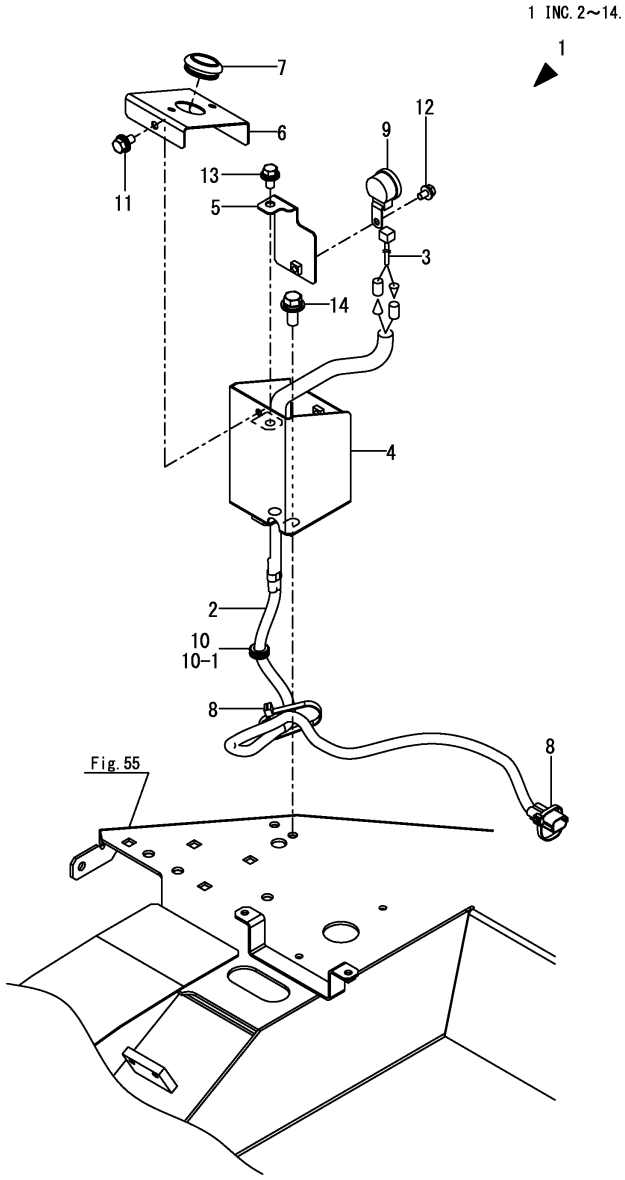


(A)=VIO30-6B P(KR)
(B)=
(C)=
(D)=
(E)=
(F)=

| No. | Lev. | Parts No. | Description | Q'ty (A) | (B) | (C) | (D) | (E) | (F) | I | R |
|---|---|---|---|---|---|---|---|---|---|---|---|
| 1 | 1 | 172B03-08350 | ALARM KIT, TRAVEL | 1 | | | | | | | |
| 2 | 2 | 172B03-16560 | HARNESS, BUZZER | 1 | | | | | | | |
| 3 | 2 | 172B03-16570 | HARNESS, BUZZER | 1 | | | | | | | |
| 4 | 2 | 172B03-16740 | BRACKET ASSY, BUZZER | 1 | | | | | | | |
| 5 | 2 | 172B03-16760 | BRACKET ASSY | 1 | | | | | | | |
| 6 | 2 | 172B03-16890 | PLATE, TRAVEL BUZZER | 1 | | | | | | | |
| 7 | 2 | 172456-53700 | GROMMET, 30 | 1 | | | | | | | |
| 8 | 2 | 194202-56460 | BAND, BINDING 200 | 2 | | | | | | | |
| 9 | 2 | 198071-57110 | BUZZER, BACK | 1 | | | | | | | |
| 10 | 2 | 172162-61850 | GROMMET | 1 | | | | | | | |
| 10-1 | 2 | 172B16-17170 | GROMMET, 20X30X3 | 1 | | | | | | S | |
| | (A=*2022.01.) | | | | | | | | | | |
| 11 | 2 | 26014-060122 | BOLT, M6X 12 | 2 | | | | | | | |
| 12 | 2 | 26014-060162 | BOLT, M6X 16 | 1 | | | | | | | |
| 13 | 2 | 26014-080162 | BOLT, M8X 16 | 1 | | | | | | | |
| 14 | 2 | 26014-080202 | BOLT, M8X 20 | 2 | | | | | | | |

N:Old $\overset{\text{Yes}}{\underset{\text{No}}{\rightleftarrows}}$ New, Q:Old $\overset{\text{No}}{\underset{\text{Yes}}{\rightleftarrows}}$ New, R:Old $\overset{\text{Yes}}{\underset{\text{Yes}}{\rightleftarrows}}$ New, S:Old $\overset{\text{No}}{\underset{\text{No}}{\rightleftarrows}}$ New, W:Add, Z:Discontinued, F:Interchangeable by set, K:Q'ty Change

Copyright (C) YANMAR GLOBAL CS CO., LTD. All RightsReserved.

# Parts No. Index

| Parts No. | Fig. No. | Ref. No. |
|---|---|---|
| 106990-44660 | 13 | 27 |
| 119802-55710 | 14 | 23 |
| 121120-13580 | 6 | 15 |
| 121250-49121 | 11 | 6 |
| 121256-44600 | 11 | 16 |
| 124450-44550 | 11 | 15 |
| 124766-59050 | 11 | 19 |
| | | 20 |
| | 13 | 28 |
| | 14 | 28 |
| | | 29 |
| | | 30 |
| | | 31 |
| | | 32 |
| | | 33 |
| 129004-55612 | 14 | 20 |
| 129100-55690 | 14 | 22 |
| 129263-44510 | 11 | 14 |
| 129612-52100 | 14 | 19 |
| 129907-55810 | 14 | 27 |
| 129927-44900 | 84 | 2 |
| 129927-77920 | 16 | 14 |
| | 137 | 16 |
| 172020-10620 | 105 | 2 |
| 172068-28490 | 39 | 1 |
| 172110-45050 | 39 | 22 |
| 172110-76170 | 101 | 6 |
| | 102 | 1 |
| 172112-75780 | 84 | 18 |
| 172112-77361 | 93 | 11 |
| | 96 | 14 |
| 172112-87860 | 108 | 2 |
| 172122-13381 | 11 | 8 |
| 172122-17190 | 64 | 10 |
| 172122-46590 | 32 | 13 |
| | 33 | 20 |
| | 39 | 13 |
| 172122-55061 | 84 | 29 |
| 172122-57620 | 44 | 5 |
| 172122-70350 | 73 | 28 |
| 172122-70460 | 73 | 6 |
| 172122-70630 | 74 | 14 |
| 172122-73430 | 73 | 41 |
| 172122-73470 | 73 | 51 |
| | 74 | 15 |
| 172122-79890 | 91 | 3 |
| 172122-79930 | 97 | 27 |
| | 133 | 24 |
| 172122-79940 | 59 | 9 |
| 172123-76121 | 71 | 27 |

| Parts No. | Fig. No. | Ref. No. |
|---|---|---|
| 172123-76121 | 85 | 1 |
| | 88 | 3 |
| | 93 | 7 |
| | 97 | 4 |
| | 133 | 2 |
| | 136 | 3 |
| | 141 | 24 |
| 172124-13230-5 | 9 | 7 |
| 172124-46200 | 32 | 11 |
| | 33 | 18 |
| | 39 | 7 |
| | | 8 |
| | 103 | 2 |
| 172124-46340 | 32 | 12 |
| 172124-70380 | 74 | 9 |
| 172124-70390 | 74 | 10 |
| | | 11 |
| 172124-76160 | 87 | 12 |
| 172124-94310-5 | 108 | 9 |
| 172125-03951 | 2 | 9 |
| 172126-11510 | 19 | 1 |
| | 85 | 23 |
| | 97 | 30 |
| | 133 | 27 |
| | | 28 |
| 172137-16560 | 7 | 13 |
| | 24 | 3 |
| 172137-46210 | 23 | 17 |
| | 54 | 2 |
| | | 3 |
| | | 4 |
| | 59 | 7 |
| 172137-62970 | 109 | 21 |
| 172137-66230 | 46 | 11 |
| | | 16 |
| 172137-73700 | 84 | 3 |
| 172137-73860 | 75 | 5 |
| 172137-76110 | 84 | 19 |
| 172137-76580 | 101 | 9 |
| | 102 | 4 |
| 172141-17150 | 25 | 2 |
| 172141-29111 | 26 | 1 |
| 172141-29112 | 26 | 1 -1 |
| 172141-37320 | 28 | 4 |
| | 134 | 3 |
| 172141-41340 | 32 | 1 |
| 172141-41360 | 33 | 9 |
| | 34 | 3 |
| | 37 | 3 |
| | | 8 |

| Parts No. | Fig. No. | Ref. No. |
|---|---|---|
| 172141-41360 | 39 | 21 |
| | 121 | 2 |
| | | 7 |
| 172141-41370 | 32 | 3 |
| | | 6 |
| | 33 | 3 |
| | 38 | 3 |
| | 39 | 11 |
| | | 15 |
| 172141-70020 | 73 | 22 |
| 172141-70030 | 73 | 23 |
| 172141-70041 | 73 | 24 |
| 172141-70100 | 73 | 25 |
| 172141-70110 | 73 | 26 |
| 172141-70230 | 73 | 27 |
| 172141-72250 | 70 | 19 |
| | 71 | 13 |
| 172141-72420 | 70 | 20 |
| 172141-73090 | 70 | 33 |
| 172141-73770 | 84 | 6 |
| 172141-76090 | 95 | 7 |
| 172141-76181 | 71 | 28 |
| | 72 | 27 |
| | 101 | 7 |
| 172141-76220 | 92 | 5 |
| 172141-76900 | 68 | 34 |
| | 69 | 39 |
| | 70 | 35 |
| | 138 | 29 |
| | 139 | 33 |
| | 140 | 27 |
| 172141-76920 | 85 | 9 |
| | 87 | 21 |
| 172141-84601 | 103 | 18 |
| 172141-84710 | 114 | 9 |
| 172142-62301 | 5 | 5 |
| | 12 | 10 |
| 172142-72260 | 69 | 19 |
| | 72 | 12 |
| 172142-73800 | 75 | 10 |
| 172142-76940-Y | 96 | 11 |
| 172142-76950-Y | 96 | 13 |
| 172142-81620 | 106 | 7 |
| 172142-94241 | 108 | 8 |
| 172146-72270 | 68 | 32 |
| 172146-82910 | 105 | 13 |
| 172147-70280 | 74 | 6 |
| 172147-70331 | 74 | 8 |
| 172147-70390 | 74 | 12 |
| 172147-70500 | 73 | 7 |

| Parts No. | Fig. No. | Ref. No. |
|---|---|---|
| 172147-70500 | 73 | 30 |
| | 74 | 13 |
| 172148-70301 | 73 | 4 |
| | 74 | 7 |
| 172148-70340 | 73 | 5 |
| 172148-73870 | 75 | 12 |
| 172148-82320 | 104 | 5 |
| 172151-72540 | 69 | 33 |
| 172151-72591 | 69 | 23 |
| | | 29 |
| 172151-72870 | 71 | 26 |
| 172151-73400 | 83 | 11 |
| | 131 | 2 |
| | 132 | 2 |
| 172151-73420 | 83 | 12 |
| | 131 | 3 |
| | 132 | 3 |
| 172151-73450 | 83 | 13 |
| | 131 | 4 |
| | 132 | 4 |
| 172151-76050 | 97 | 1 |
| | 133 | 1 |
| 172156-72400 | 100 | 2 |
| 172156-72770 | 100 | 4 |
| 172157-45990 | 33 | 17 |
| 172162-14200 | 13 | 4 |
| 172162-61850 | 115 | 10 |
| | 144 | 9 |
| 172162-68370 | 36 | 4 -1 |
| 172162-76181 | 88 | 6 |
| 172164-66480 | 55 | 10 |
| 172164-66640 | 55 | 11 |
| 172164-76131 | 87 | 6 |
| 172164-81670 | 68 | 43 |
| | 105 | 5 |
| | 106 | 8 |
| | 108 | 1 |
| | 138 | 41 |
| 172164-81820-Y | 107 | 13 -1 |
| 172165-46340 | 33 | 19 |
| 172165-47550 | 38 | 11 |
| 172165-62800 | 19 | 20 |
| | | 21 |
| 172165-62830 | 55 | 24 |
| 172165-71200 | 66 | 4 |
| 172165-72310 | 70 | 22 |
| | | 28 |
| | 71 | 20 |
| 172165-76580 | 96 | 9 |
| 172165-76590 | 85 | 8 |

# Parts No. Index


| Parts No. | Fig. No. | Ref. No. |
|---|---|---|
| 172165-81770 | 43 | 4 |
| 172165-82520 | 68 | 46 |
| | 105 | 11 |
| | 106 | 11 |
| | 138 | 44 |
| 172165-82530 | 68 | 47 |
| | 105 | 12 |
| | 106 | 12 |
| | 138 | 45 |
| 172165-82580 | 71 | 36 |
| | 106 | 13 |
| | 107 | 4 |
| | 141 | 31 |
| 172165-82590 | 71 | 37 |
| | 106 | 14 |
| | 107 | 5 |
| | 141 | 32 |
| 172168-71101-4 | 66 | 1 |
| 172168-71951 | 73 | 10 |
| 172168-72240 | 70 | 28 -1 |
| | 108 | 4 |
| 172168-72410 | 72 | 15 |
| | | 19 |
| 172168-76370 | 95 | 13 |
| 172168-81270 | 70 | 30 -1 |
| | 106 | 3 |
| | 107 | 7 -1 |
| | | 8 |
| | 108 | 5 |
| | 114 | 2 -1 |
| | | 3 |
| 172169-54750 | 43 | 3 |
| 172173-74280 | 77 | 38 |
| | 79 | 20 |
| | 125 | 38 |
| | 127 | 20 |
| 172173-76102 | 93 | 3 |
| 172173-76121 | 72 | 26 |
| | 93 | 8 |
| 172175-13110-1 | 9 | 4 |
| 172175-72550 | 72 | 13 |
| 172175-73700 | 84 | 4 |
| 172175-73710 | 84 | 5 |
| 172175-81700 | 105 | 6 |
| 172175-81710 | 105 | 7 |
| 172176-68210 | 105 | 23 |
| 172176-81700 | 104 | 1 |
| 172176-81710 | 104 | 2 |
| 172183-03280 | 3 | 9 |
| | 118 | 9 |

| Parts No. | Fig. No. | Ref. No. |
|---|---|---|
| 172183-16560 | 97 | 12 |
| | 133 | 9 |
| 172183-73670 | 73 | 70 |
| 172183-76200 | 88 | 8 |
| | 97 | 5 |
| 172183-76250-Y | 96 | 3 |
| 172183-81160 | 105 | 24 |
| | | 25 |
| | 106 | 19 |
| 172186-45840 | 109 | 17 |
| 172186-76390 | 136 | 8 |
| 172187-16110 | 15 | 14 |
| 172187-45651 | 33 | 13 |
| 172187-45760 | 33 | 14 |
| | 39 | 3 |
| | 145 | 1 |
| 172187-45870 | 32 | 9 |
| 172187-45880 | 32 | 10 |
| 172187-46190 | 39 | 6 |
| 172187-46400-1 | 39 | 9 |
| 172187-53321 | 41 | 2 |
| | 42 | 1 |
| | 112 | 4 |
| 172187-61421 | 47 | 1 |
| | 56 | 1 |
| 172187-64900 | 23 | 18 |
| | 55 | 8 |
| 172187-73711 | 84 | 7 |
| 172187-75500 | 84 | 17 |
| 172187-76200 | 96 | 2 |
| 172187-76520 | 96 | 7 |
| 172187-76530-Y | 96 | 8 |
| 172187-76690-Y | 96 | 10 |
| 172187-76940 | 95 | 25 |
| | 96 | 12 |
| 172187-78580 | 19 | 34 |
| | | 35 |
| | 101 | 12 |
| 172312-74790 | 73 | 8 |
| | | 9 |
| 172422-37310 | 28 | 3 |
| 172422-73140 | 67 | 7 |
| 172422-73160 | 67 | 8 |
| 172422-73170 | 67 | 67 |
| 172422-73220 | 67 | 11 |
| 172422-73280 | 67 | 12 |
| 172422-73290 | 67 | 13 |
| 172422-73500 | 67 | 14 |
| 172422-73510 | 67 | 68 |
| 172422-73520 | 67 | 15 |

| Parts No. | Fig. No. | Ref. No. |
|---|---|---|
| 172422-73530 | 67 | 16 |
| | | 17 |
| 172422-73540 | 67 | 18 |
| 172422-73550 | 67 | 19 |
| 172422-73560 | 67 | 21 |
| 172422-73570 | 67 | 69 |
| 172422-73580 | 67 | 24 |
| 172422-73590 | 67 | 26 |
| 172422-73610 | 67 | 27 |
| 172422-73700 | 67 | 66 |
| 172422-76100 | 67 | 1 |
| 172422-76140 | 88 | 4 |
| 172422-94210 | 108 | 7 |
| 172423-72530 | 69 | 36 |
| 172423-72540 | 69 | 37 |
| 172423-73530 | 74 | 17 |
| 172434-61170 | 50 | 1 B |
| 172434-61200 | 5 | 4 |
| | 63 | 2 |
| 172437-03242 | 3 | 3 |
| | 118 | 3 |
| 172437-03252 | 3 | 8 |
| | 118 | 8 |
| 172437-03302 | 3 | 10 |
| | 118 | 10 |
| 172437-03312 | 3 | 11 |
| | 118 | 11 |
| 172437-03322 | 1 | 6 |
| | 117 | 6 |
| 172437-03343 | 3 | 12 |
| | 118 | 12 |
| 172437-03352 | 1 | 7 |
| | 117 | 7 |
| 172437-03361 | 2 | 7 |
| 172437-03372 | 3 | 13 |
| | 118 | 13 |
| 172437-03381 | 1 | 8 |
| | 117 | 8 |
| 172437-03391 | 3 | 14 |
| | 118 | 14 |
| 172437-03402 | 1 | 9 |
| | 117 | 9 |
| 172437-03432 | 3 | 17 |
| | 118 | 17 |
| 172437-03451 | 3 | 20 |
| | 118 | 20 |
| 172437-03461 | 1 | 11 |
| | 117 | 11 |
| 172437-03471 | 3 | 21 |
| | 118 | 21 |

| Parts No. | Fig. No. | Ref. No. |
|---|---|---|
| 172437-03501 | 1 | 13 |
| | 117 | 13 |
| 172437-03511 | 1 | 14 |
| | | 14 -1 |
| | 117 | 14 |
| | | 14 -1 |
| 172438-76460 | 95 | 14 |
| 172441-37302 | 28 | 1 |
| 172441-44320 | 36 | 1 |
| 172444-13210 | 11 | 4 |
| 172444-13220 | 11 | 5 |
| 172444-14130 | 13 | 17 |
| 172444-14200 | 13 | 5 |
| 172444-14410 | 13 | 25 |
| 172444-14450 | 13 | 6 |
| 172444-14460 | 13 | 7 |
| 172444-14470 | 13 | 8 |
| 172444-14480 | 13 | 9 |
| 172444-14490 | 13 | 10 |
| 172444-17620 | 50 | 4 A |
| 172444-17660 | 54 | 1 |
| | 55 | 21 |
| | | 22 |
| | 105 | 22 |
| 172444-65190 | 47 | 17 |
| 172444-73831 | 75 | 3 |
| 172444-73840 | 75 | 4 |
| 172444-73880 | 75 | 9 |
| 172444-76400 | 85 | 4 |
| 172444-81310 | 106 | 4 |
| 172445-76153 | 88 | 5 |
| 172446-62910 | 55 | 4 |
| 172446-75250 | 84 | 9 |
| 172447-14160 | 13 | 3 |
| 172447-17150 | 16 | 9 |
| | 137 | 9 |
| 172447-73840 | 75 | 11 |
| 172447-74230 | 80 | 2 |
| | 128 | 17 |
| 172448-14670 | 14 | 15 |
| 172448-54120 | 68 | 18 |
| | | 24 |
| | 69 | 21 |
| | | 27 |
| | 106 | 2 |
| 172448-65490 | 46 | 21 |
| | | 22 |
| | 60 | 13 |
| 172448-72650 | 70 | 24 |
| | | 30 |

# Parts No. Index


| Parts No. | Fig. No. | Ref. No. |
|---|---|---|
| 172448-72650 | 71 | 15 |
| | | 21 |
| | 72 | 16 |
| | | 20 |
| | 107 | 7 |
| | 114 | 2 |
| 172450-73120 | 67 | 35 |
| 172450-73130 | 67 | 36 |
| 172450-73330 | 73 | 31 |
| 172450-73350 | 73 | 32 |
| 172450-73360 | 73 | 33 |
| 172450-73370 | 73 | 34 |
| 172450-73380 | 73 | 35 |
| 172450-73390 | 73 | 36 |
| 172450-73400 | 73 | 37 |
| 172450-73410 | 73 | 38 |
| 172450-73420 | 73 | 39 |
| 172450-73430 | 73 | 42 |
| 172450-73440 | 73 | 43 |
| 172450-73450 | 73 | 44 |
| 172450-73460 | 73 | 45 |
| 172450-73470 | 73 | 46 |
| 172450-73501 | 73 | 63 |
| 172450-73510 | 73 | 64 |
| 172450-73551 | 73 | 68 |
| 172450-73751 | 74 | 54 |
| 172450-73830 | 74 | 20 |
| 172450-73850 | 74 | 21 |
| 172450-73860 | 74 | 22 |
| 172450-73870 | 74 | 23 |
| 172450-77050 | 74 | 31 |
| 172450-77070 | 74 | 32 |
| 172450-77080 | 74 | 33 |
| 172450-77090 | 74 | 34 |
| 172450-77110 | 74 | 35 |
| 172450-77120 | 74 | 36 |
| 172450-77130 | 74 | 37 |
| 172450-77140 | 74 | 38 |
| 172450-77170 | 74 | 39 |
| 172450-77190 | 74 | 40 |
| 172450-77220 | 74 | 68 |
| 172455-29140 | 74 | 1 |
| 172455-46890 | 38 | 10 |
| 172455-53331 | 41 | 3 |
| 172455-61710 | 57 | 1 |
| 172455-75270 | 84 | 10 |
| 172455-75290 | 84 | 12 |
| 172455-75300 | 84 | 13 |
| 172455-76220 | 97 | 6 |
| | 133 | 3 |

| Parts No. | Fig. No. | Ref. No. |
|---|---|---|
| 172455-79140 | 95 | 28 |
| 172456-53700 | 41 | 4 |
| | 115 | 7 |
| | 144 | 6 |
| 172456-74290 | 80 | 18 |
| 172456-74440 | 77 | 28 -1 |
| | 125 | 28 |
| 172458-03240 | 4 | 4 |
| 172458-13120-1 | 9 | 6 |
| 172458-14203 | 13 | 11 |
| 172458-14340 | 13 | 24 |
| 172458-14370 | 13 | 14 |
| 172458-16550 | 16 | 7 |
| | 137 | 7 |
| 172458-37102 | 27 | 3 |
| 172458-37120 | 27 | 6 |
| 172458-37131 | 27 | 7 |
| 172458-37151 | 27 | 10 |
| 172458-37500-2 | 29 | 1 |
| 172458-37570 | 29 | 3 |
| 172458-37580 | 29 | 4 |
| 172458-37590 | 29 | 5 |
| 172458-37700 | 27 | 15 |
| 172458-45230-1 | 33 | 5 |
| 172458-45510-1 | 35 | 1 |
| | 120 | 1 |
| 172458-45521-1 | 33 | 11 |
| 172458-45540-1 | 33 | 12 |
| 172458-45950 | 34 | 5 |
| 172458-50480-2 | 40 | 2 |
| 172458-57601-2 | 44 | 1 -1 |
| 172458-63641 | 97 | 13 |
| | 133 | 10 |
| 172458-65070 | 56 | 9 -1 |
| 172458-72050 | 72 | 3 |
| 172458-72260 | 68 | 31 |
| 172458-72290 | 68 | 33 |
| 172458-72460 | 69 | 30 |
| 172458-72470 | 69 | 35 |
| 172458-72740 | 71 | 17 |
| | 141 | 6 |
| 172458-72741 | 141 | 6 -1 |
| 172458-73510 | 67 | 41 |
| 172458-73550 | 67 | 20 |
| 172458-73560 | 67 | 22 |
| 172458-73570 | 67 | 23 |
| 172458-73580 | 67 | 25 |
| 172458-73660 | 67 | 28 |
| 172458-73680 | 67 | 59 |
| 172458-73690 | 67 | 60 |

| Parts No. | Fig. No. | Ref. No. |
|---|---|---|
| 172458-73712 | 74 | 2 |
| 172458-73770 | 73 | 71 |
| 172458-73790 | 67 | 61 |
| 172458-73960 | 74 | 67 |
| 172458-73970 | 74 | 24 |
| 172458-73980 | 74 | 25 |
| 172458-73990 | 74 | 26 |
| 172458-74130 | 78 | 2 |
| | 79 | 2 |
| | 80 | 4 |
| | | 20 |
| | 82 | 14 |
| | 126 | 2 |
| | 127 | 2 |
| | 128 | 19 |
| | 130 | 14 |
| 172458-74140 | 78 | 3 |
| | 79 | 3 |
| | 80 | 5 |
| | | 21 |
| | 82 | 15 |
| | 126 | 3 |
| | 127 | 3 |
| | 128 | 20 |
| | 130 | 15 |
| 172458-74150 | 77 | 32 |
| | 78 | 16 |
| | 80 | 6 |
| | 81 | 26 |
| | 82 | 2 |
| | | 16 |
| | 125 | 32 |
| | 126 | 16 |
| | 128 | 21 |
| | 129 | 26 |
| | 130 | 2 |
| | | 16 |
| 172458-74160 | 77 | 33 |
| | 78 | 17 |
| | 80 | 7 |
| | 81 | 27 |
| | 82 | 3 |
| | | 17 |
| | 125 | 33 |
| | 126 | 17 |
| | 128 | 22 |
| | 129 | 27 |
| | 130 | 3 |
| | | 17 |
| 172458-74170 | 78 | 4 |

| Parts No. | Fig. No. | Ref. No. |
|---|---|---|
| 172458-74170 | 79 | 4 |
| | 80 | 8 |
| | | 22 |
| | 82 | 19 |
| | 126 | 4 |
| | 127 | 4 |
| | 128 | 23 |
| | 130 | 19 |
| 172458-74230 | 77 | 34 |
| | 78 | 18 |
| | 79 | 17 |
| | 81 | 4 |
| | | 28 |
| | 82 | 6 |
| | 125 | 34 |
| | 126 | 18 |
| | 127 | 17 |
| | 128 | 4 |
| | 129 | 4 |
| | | 28 |
| | 130 | 6 |
| 172458-74240 | 77 | 35 |
| | 78 | 19 |
| | 81 | 29 |
| | 82 | 7 |
| | 125 | 35 |
| | 126 | 19 |
| | 128 | 5 |
| | 129 | 29 |
| | 130 | 7 |
| 172458-74250 | 77 | 36 |
| | 78 | 20 |
| | 81 | 7 |
| | | 30 |
| | 82 | 8 |
| | 125 | 36 |
| | 126 | 20 |
| | 128 | 6 |
| | 129 | 7 |
| | | 30 |
| | 130 | 8 |
| 172458-74260 | 77 | 37 |
| | 78 | 21 |
| | 79 | 19 |
| | 81 | 9 |
| | | 31 |
| | 82 | 9 |
| | 125 | 37 |
| | 126 | 21 |
| | 127 | 19 |

# Parts No. Index


| Parts No. | Fig. No. | Ref. No. |
|---|---|---|
| 172458-74260 | 128 | 7 |
| | 129 | 9 |
| | | 31 |
| | 130 | 9 |
| 172458-74290 | 77 | 6 |
| | 78 | 5 |
| | 79 | 5 |
| | 81 | 11 |
| | 125 | 6 |
| | 126 | 5 |
| | 127 | 5 |
| | 129 | 11 |
| 172458-74310 | 74 | 27 |
| 172458-74320 | 74 | 28 |
| 172458-74330 | 74 | 29 |
| 172458-74340 | 74 | 48 |
| 172458-74360 | 77 | 7 |
| | 78 | 6 |
| | 79 | 6 |
| | 81 | 12 |
| | 125 | 7 |
| | 126 | 6 |
| | 127 | 6 |
| | 129 | 12 |
| 172458-74530 | 79 | 25 |
| | 127 | 25 |
| 172458-74540 | 79 | 26 |
| | 127 | 26 |
| 172458-74550 | 79 | 27 |
| | 127 | 27 |
| 172458-74630 | 77 | 41 |
| | 78 | 24 |
| | 80 | 11 |
| | 81 | 34 |
| | 82 | 10 |
| | | 21 |
| | 125 | 41 |
| | 126 | 24 |
| | 128 | 26 |
| | 129 | 34 |
| | 130 | 10 |
| | | 21 |
| 172458-74640 | 77 | 13 |
| | 78 | 9 |
| | 79 | 9 |
| | 81 | 13 |
| | 125 | 13 |
| | 126 | 9 |
| | 127 | 9 |
| | 129 | 13 |

| Parts No. | Fig. No. | Ref. No. |
|---|---|---|
| 172458-74670 | 79 | 28 |
| | 81 | 14 |
| | 127 | 28 |
| | 129 | 14 |
| 172458-74720 | 77 | 1 |
| | 125 | 1 |
| 172458-74730 | 77 | 2 |
| | 125 | 2 |
| 172458-74910 | 74 | 71 |
| 172458-76150 | 87 | 10 |
| | 136 | 4 |
| 172458-76160 | 86 | 9 |
| 172458-78571 | 97 | 14 |
| | 133 | 11 |
| 172458-81630 | 106 | 6 |
| | 107 | 9 |
| | 114 | 4 |
| 172458-82600-Y | 107 | 12 -1 |
| 172459-73740 | 74 | 19 |
| 172459-82320 | 104 | 6 |
| 172460-37750 | 27 | 16 |
| 172460-72941 | 69 | 38 |
| 172460-73570 | 73 | 72 |
| 172460-76570 | 85 | 6 |
| 172460-81400 | 105 | 4 |
| 172462-03320 | 2 | 6 |
| 172463-03290 | 1 | 5 |
| | 117 | 5 |
| 172472-03141 | 3 | 5 |
| | 118 | 5 |
| 172472-03230 | 4 | 3 |
| 172472-03241 | 4 | 5 |
| 172472-03261 | 4 | 6 |
| 172472-03290 | 23 | 2 |
| 172472-03300 | 23 | 3 |
| 172472-03330 | 4 | 7 |
| 172478-17201 | 22 | 1 |
| 172490-03200 | 3 | 6 |
| 172490-13112-1 | 9 | 5 |
| 172490-37320 | 28 | 9 |
| | 134 | 10 |
| 172490-74310 | 80 | 23 |
| | 128 | 9 |
| 172490-74320 | 80 | 24 |
| | 128 | 11 |
| 172490-74330 | 80 | 25 |
| | 128 | 12 |
| 172499-03270 | 3 | 22 |
| | 118 | 22 |
| 172499-70180 | 77 | 31 |

| Parts No. | Fig. No. | Ref. No. |
|---|---|---|
| 172499-70180 | 79 | 16 |
| | 125 | 31 |
| | 127 | 16 |
| 172499-74860 | 81 | 15 |
| | 129 | 15 |
| 172519-63240 | 19 | 22 |
| | 36 | 4 |
| | | 5 |
| | 53 | 4 |
| | | 5 |
| 172534-76760 | 95 | 15 |
| 172538-17100 | 25 | 1 |
| 172538-65320 | 55 | 9 |
| 172631-16350 | 15 | 7 |
| 172637-76110 | 84 | 20 |
| 172638-73330 | 73 | 15 |
| 172638-73470 | 74 | 16 |
| 172644-76161 | 86 | 11 |
| 172648-16600 | 109 | 9 |
| 172653-16100 | 15 | 1 |
| 172730-05250 | 64 | 1 |
| 172823-45940 | 33 | 16 |
| 172958-03160 | 4 | 2 |
| 172958-17101 | 23 | 4 |
| 172958-17110 | 23 | 1 |
| 172958-17121 | 103 | 1 |
| 172958-17140 | 23 | 7 |
| 172958-17150 | 23 | 8 |
| 172958-17160 | 23 | 9 |
| 172958-17170 | 23 | 10 |
| 172958-17180 | 23 | 11 |
| 172958-17190 | 23 | 12 |
| 172958-17200 | 23 | 13 |
| 172958-17210 | 23 | 14 |
| 172958-17220 | 23 | 15 |
| 172958-72750 | 100 | 3 |
| 172958-72760 | 100 | 6 |
| 172958-72770 | 100 | 11 |
| 172958-72801-N | 100 | 1 |
| 172958-72811-N | 100 | 14 |
| 172958-72860 | 100 | 17 |
| 172958-72890 | 100 | 20 |
| 172958-72950 | 100 | 21 |
| 172958-72960 | 100 | 22 |
| 172958-72970 | 100 | 16 |
| 172958-72983-N | 100 | 23 |
| 172958-73510 | 67 | 49 |
| 172958-73511 | 67 | 49 -1 |
| 172958-73512 | 67 | 49 -2 |
| 172958-76102-Y | 101 | 3 |

| Parts No. | Fig. No. | Ref. No. |
|---|---|---|
| 172958-76130 | 101 | 4 |
| 172958-78200 | 101 | 10 |
| 172958-78210 | 101 | 11 |
| 172958-81904-Y | 101 | 15 |
| 172958-83102-Y | 103 | 3 |
| 172958-83111-Y | 103 | 4 |
| 172958-83120 | 103 | 5 |
| 172958-83131 | 103 | 6 |
| 172958-83140 | 103 | 7 |
| 172958-83150 | 103 | 8 |
| 172958-83171-Y | 103 | 9 |
| 172958-83183 | 103 | 10 |
| 172958-83220 | 103 | 12 |
| 172958-83252 | 103 | 13 |
| 172958-83271-Y | 103 | 14 |
| 172958-83281-Y | 103 | 15 |
| 172958-83292-Y | 103 | 16 |
| 172958-83330 | 103 | 17 |
| 172960-83210 | 103 | 11 |
| 172964-12140 | 37 | 1 |
| 172A07-03160 | 2 | 2 |
| 172A21-13100 | 9 | 2 |
| 172A23-72043 | 68 | 1 |
| | 69 | 1 |
| | 70 | 1 |
| | 138 | 33 |
| | 139 | 38 |
| | 140 | 32 |
| 172A23-72052 | 68 | 2 |
| | 69 | 2 |
| | 70 | 2 |
| | 138 | 34 |
| | 139 | 39 |
| | 140 | 33 |
| 172A23-72081 | 68 | 4 |
| | 69 | 4 |
| | 70 | 4 |
| | 138 | 36 |
| | 139 | 41 |
| | 140 | 35 |
| 172A25-68500 | 110 | 4 |
| 172A25-76570 | 85 | 5 |
| 172A25-81900 | 71 | 32 |
| | 107 | 2 |
| | 141 | 27 |
| 172A36-03411 | 1 | 10 |
| | 117 | 10 |
| 172A38-03201 | 2 | 3 |
| 172A38-03211 | 2 | 4 |
| 172A45-73720 | 74 | 53 |

# Parts No. Index


| Parts No. | Fig. No. | Ref. No. |
|---|---|---|
| 172A45-73730 | 74 | 18 |
| 172A46-03220 | 3 | 23 |
| 172A46-03270 | 1 | 15 |
| 172A46-14601 | 14 | 7 |
| 172A46-45500 | 83 | 4 |
| 172A46-45510 | 83 | 5 |
| 172A46-46500 | 36 | 2 |
| 172A46-46530 | 36 | 3 |
| 172A46-53360 | 42 | 3 |
| | 112 | 6 |
| 172A46-57610 | 44 | 4 |
| 172A46-61460 | 49 | 2 |
| 172A46-61940 | 47 | 5 |
| 172A46-72070 | 68 | 3 |
| | 69 | 3 |
| | 70 | 3 |
| | 138 | 35 |
| | 139 | 40 |
| | 140 | 34 |
| 172A46-72590 | 70 | 11 |
| 172A46-72910 | 71 | 6 |
| 172A46-73520 | 73 | 65 |
| 172A46-73530 | 73 | 66 |
| 172A46-73540 | 73 | 67 |
| 172A46-73560 | 73 | 69 |
| 172A46-74250 | 79 | 18 |
| | 127 | 18 |
| 172A46-77800 | 99 | 1 |
| 172A46-81901 | 71 | 33 |
| | 141 | 28 |
| 172A47-03371 | 118 | 25 |
| 172A47-14520 | 13 | 26 |
| 172A47-45580 | 34 | 6 |
| 172A47-65550 | 61 | 2 |
| | 146 | 4 |
| 172A47-72840 | 68 | 41 |
| | 69 | 47 |
| | 70 | 41 |
| | 138 | 39 |
| | 139 | 45 |
| | 140 | 39 |
| 172A47-72881-N | 68 | 42 |
| | 138 | 40 |
| 172A47-73320 | 73 | 12 |
| 172A47-74121 | 95 | 1 |
| 172A47-74260 | 81 | 10 |
| | 129 | 10 |
| 172A47-74270 | 77 | 5 |
| | 125 | 5 |
| 172A47-74360 | 79 | 21 |
| 172A47-74360 | 127 | 21 |
| 172A47-74370 | 79 | 22 |
| | 127 | 22 |
| 172A47-74380 | 79 | 23 |
| | 127 | 23 |
| 172A47-74460 | 77 | 8 |
| | 125 | 8 |
| 172A47-74560 | 77 | 10 |
| | 125 | 10 |
| 172A47-74570 | 77 | 11 |
| | 125 | 11 |
| 172A47-74580 | 77 | 12 |
| | 125 | 12 |
| 172A47-74920 | 77 | 14 |
| | 125 | 14 |
| 172A47-74930 | 77 | 15 |
| | 125 | 15 |
| 172A47-74950 | 77 | 42 |
| | 81 | 16 |
| | 125 | 42 |
| | 129 | 16 |
| 172A47-74970 | 77 | 43 |
| | 125 | 43 |
| 172A47-74980 | 79 | 29 |
| | 127 | 29 |
| 172A47-75460 | 80 | 18 -1 |
| | 128 | 2 |
| 172A47-75480 | 111 | 2 |
| 172A47-75620 | 77 | 16 |
| | 80 | 28 |
| | 125 | 16 |
| | 128 | 13 |
| 172A47-75680 | 77 | 17 |
| | 81 | 17 |
| | 125 | 17 |
| | 129 | 17 |
| 172A47-75690 | 77 | 18 |
| | 125 | 18 |
| 172A47-75720 | 81 | 18 |
| | 129 | 18 |
| 172A47-76111 | 22 | 2 |
| 172A47-76151 | 85 | 2 |
| 172A47-76310 | 88 | 9 |
| 172A47-76460 | 94 | 11 |
| 172A47-77820 | 99 | 3 |
| 172A47-81980 | 71 | 35 |
| | 141 | 30 |
| 172A48-53371 | 42 | 4 |
| | 112 | 7 |
| 172A52-76110 | 86 | 7 |
| 172A64-03380 | 117 | 8 -1 |
| 172A64-13760 | 12 | 6 |
| 172A64-14250 | 14 | 1 |
| 172A64-17250 | 19 | 14 |
| 172A64-64910 | 56 | 9 |
| 172A64-73280 | 67 | 62 |
| 172A64-74590 | 83 | 14 |
| | 131 | 5 |
| | 132 | 5 |
| 172A64-74600 | 83 | 15 |
| | 131 | 7 |
| | 132 | 7 |
| 172A64-74601 | 83 | 15 -1 |
| | 131 | 7 -1 |
| | 132 | 7 -1 |
| 172A64-74610 | 83 | 16 |
| | 131 | 8 |
| | 132 | 8 |
| 172A64-74611 | 83 | 16 -1 |
| | 131 | 8 -1 |
| | 132 | 8 -1 |
| 172A64-74620 | 131 | 9 |
| | 132 | 9 |
| 172A64-74630 | 83 | 17 |
| | 131 | 10 |
| | 132 | 10 |
| 172A64-74640 | 83 | 19 |
| | 131 | 11 |
| | 132 | 11 |
| 172A64-74650 | 83 | 20 |
| | 131 | 12 |
| | 132 | 12 |
| 172A64-74660 | 83 | 21 |
| | 131 | 17 |
| | 132 | 13 |
| 172A64-74670 | 83 | 22 |
| | 131 | 15 |
| 172A64-74680 | 83 | 23 |
| | 131 | 18 |
| | 132 | 14 |
| 172A64-74900 | 131 | 19 |
| | 132 | 17 |
| 172A64-74930 | 131 | 20 |
| | 132 | 18 |
| 172A65-03230 | 1 | 4 |
| | 117 | 4 |
| 172A65-16550 | 16 | 8 |
| | 137 | 8 |
| 172A65-64840 | 12 | 8 |
| 172A66-72140 | 139 | 31 |
| 172A69-03220 | 3 | 7 |
| | 118 | 7 |
| 172A69-12100 | 8 | 1 |
| 172A69-12120 | 8 | 7 |
| 172A69-14230 | 13 | 21 |
| 172A69-17260 | 19 | 15 |
| 172A69-19270 | 10 | 7 |
| | 12 | 7 |
| 172A69-46270 | 38 | 7 |
| 172A77-37370 | 27 | 5 |
| 172A77-46050 | 38 | 1 |
| 172A77-57600 | 44 | 1 |
| 172A77-57620 | 44 | 3 |
| 172A78-74650 | 83 | 6 |
| | 131 | 22 |
| | 132 | 20 |
| 172A79-03150 | 118 | 23 |
| 172A79-03160 | 117 | 15 |
| 172A79-72570 | 9 | 11 |
| | 68 | 40 |
| | 69 | 45 |
| | 70 | 39 |
| | 138 | 38 |
| | 139 | 43 |
| | 140 | 37 |
| 172A79-76110 | 22 | 4 |
| 172A89-17180 | 19 | 13 |
| 172A89-64740 | 58 | 11 |
| 172A89-64780 | 58 | 12 |
| 172A89-64790 | 58 | 13 |
| 172A89-64800 | 58 | 14 |
| 172A89-64810 | 58 | 15 |
| 172A89-64820 | 58 | 16 |
| 172A89-64830 | 58 | 17 |
| 172A89-64840 | 58 | 18 |
| 172A89-64850 | 58 | 19 |
| 172A89-64860 | 58 | 20 |
| 172A89-64870 | 58 | 21 |
| 172A89-64880 | 58 | 22 |
| 172A89-64890 | 58 | 23 |
| 172A89-64900 | 58 | 24 |
| 172A89-64910 | 58 | 25 |
| 172A89-64920 | 58 | 26 |
| 172A89-64950 | 58 | 5 |
| 172A89-77800 | 99 | 2 |
| 172B02-03130 | 3 | 4 |
| | 118 | 4 |
| 172B02-03150 | 1 | 2 |
| 172B02-03151 | 1 | 2 -1 |
| | 117 | 2 |

# Parts No. Index


| Parts No. | Fig. No. | Ref. No. |
|---|---|---|
| 172B02-08120 | 1 | 1 |
| 172B02-08121 | 1 | 1 -1 |
| 172B02-08140 | 117 | 1 |
| 172B02-08220 | 3 | 1 |
| 172B02-08440 | 118 | 1 |
| 172B02-53310 | 41 | 1 |
| 172B02-54091 | 43 | 1 |
| 172B02-54092 | 43 | 1 -1 |
| 172B02-61420 | 48 | 3 |
| 172B02-61430 | 48 | 4 |
| 172B02-64210 | 58 | 2 |
| 172B02-64250 | 58 | 9 |
| 172B02-64260 | 58 | 10 |
| 172B02-64270 | 58 | 2 A |
| 172B02-64800 | 57 | 3 |
| | 58 | 1 |
| 172B02-65350 | 60 | 11 A |
| 172B02-70330 | 139 | 2 |
| 172B02-70360 | 139 | 4 |
| 172B02-70370 | 139 | 5 |
| 172B02-70380 | 139 | 9 |
| 172B02-70390 | 139 | 12 |
| 172B02-70900 | 139 | 1 |
| 172B02-70910 | 139 | 30 |
| 172B02-72030 | 69 | 7 |
| 172B02-72040 | 69 | 8 |
| 172B02-72310 | 69 | 20 |
| 172B02-72370 | 69 | 24 |
| 172B02-72400 | 69 | 25 |
| 172B02-72451 | 69 | 6 |
| 172B02-72460 | 69 | 31 |
| 172B02-73110 | 67 | 6 |
| 172B02-73180 | 67 | 9 |
| 172B02-73190 | 67 | 10 |
| 172B02-73200 | 67 | 34 |
| 172B02-73800 | 116 | 1 |
| 172B02-73810 | 116 | 2 |
| 172B02-73840 | 116 | 3 |
| 172B02-73850 | 116 | 4 |
| 172B02-73860 | 116 | 5 |
| 172B02-73870 | 116 | 11 |
| 172B02-73880 | 116 | 12 |
| 172B02-73890 | 116 | 11 -1 |
| 172B02-73900 | 116 | 10 |
| 172B02-73910 | 116 | 10 -1 |
| 172B02-74110 | 76 | 1 |
| 172B02-74120 | 124 | 1 |
| 172B02-74150 | 82 | 13 |
| | 130 | 13 |
| 172B02-74170 | 82 | 20 |

| Parts No. | Fig. No. | Ref. No. |
|---|---|---|
| 172B02-74170 | 130 | 20 |
| 172B02-74180 | 82 | 1 |
| | 130 | 1 |
| 172B02-74200 | 82 | 5 |
| | 130 | 5 |
| 172B02-74210 | 81 | 2 |
| | 129 | 2 |
| 172B02-74230 | 81 | 5 |
| | 129 | 5 |
| 172B02-74240 | 81 | 6 |
| | 129 | 6 |
| 172B02-74250 | 81 | 8 |
| | 129 | 8 |
| 172B02-74260 | 81 | 25 |
| | 129 | 25 |
| 172B02-74280 | 81 | 33 |
| | 129 | 33 |
| 172B02-74290 | 128 | 3 |
| 172B02-74310 | 128 | 10 |
| 172B02-74320 | 80 | 3 |
| | 128 | 18 |
| 172B02-74340 | 80 | 10 |
| | 128 | 25 |
| 172B02-74350 | 79 | 1 |
| | 127 | 1 |
| 172B02-74370 | 78 | 7 |
| | 79 | 8 |
| | 126 | 7 |
| | 127 | 8 |
| 172B02-74380 | 79 | 15 |
| | 127 | 15 |
| 172B02-74400 | 78 | 1 |
| | 126 | 1 |
| 172B02-74420 | 78 | 15 |
| | 126 | 15 |
| 172B02-74440 | 78 | 23 |
| | 126 | 23 |
| 172B02-74450 | 77 | 4 |
| | 125 | 4 |
| 172B02-74470 | 77 | 30 |
| | 125 | 30 |
| 172B02-74490 | 77 | 40 |
| | 125 | 40 |
| 172B02-74500 | 80 | 19 |
| 172B02-74520 | 80 | 27 |
| 172B02-74710 | 79 | 31 |
| | 127 | 31 |
| 172B02-74720 | 81 | 23 |
| | 129 | 23 |
| 172B02-74730 | 82 | 26 |

| Parts No. | Fig. No. | Ref. No. |
|---|---|---|
| 172B02-74730 | 130 | 26 |
| 172B02-74740 | 78 | 26 |
| | 81 | 36 |
| | 126 | 26 |
| | 129 | 36 |
| 172B02-74750 | 77 | 45 |
| | 80 | 16 |
| | 81 | 37 |
| | 125 | 45 |
| | 128 | 31 |
| | 129 | 37 |
| 172B02-74760 | 77 | 28 |
| 172B02-74820 | 82 | 12 |
| | 130 | 12 |
| 172B02-74830 | 81 | 1 |
| | 129 | 1 |
| 172B02-74840 | 81 | 24 |
| | 129 | 24 |
| 172B02-74850 | 128 | 1 |
| 172B02-74860 | 80 | 1 |
| | 128 | 16 |
| 172B02-74870 | 79 | 14 |
| | 127 | 14 |
| 172B02-74880 | 78 | 14 |
| | 126 | 14 |
| 172B02-74890 | 77 | 3 |
| | 125 | 3 |
| 172B02-74900 | 77 | 29 |
| | 125 | 29 |
| 172B02-74910 | 80 | 17 |
| 172B02-76270 | 94 | 2 |
| 172B02-76350 | 96 | 4 |
| 172B02-76370 | 96 | 5 |
| 172B02-76550 | 102 | 2 |
| 172B02-76570 | 102 | 3 |
| 172B02-77900 | 96 | 27 |
| 172B02-78100 | 85 | 13 |
| 172B02-78140 | 85 | 17 |
| 172B02-78260 | 86 | 13 |
| 172B02-78400 | 94 | 12 |
| 172B02-78410 | 94 | 21 |
| 172B02-78420 | 94 | 13 |
| 172B02-78430 | 94 | 14 |
| 172B02-79030 | 102 | 6 |
| 172B02-79160 | 96 | 25 |
| 172B02-79170 | 96 | 26 |
| 172B02-81100 | 105 | 1 |
| 172B02-81500 | 106 | 1 |
| 172B02-82300 | 104 | 3 |
| 172B02-82350 | 104 | 7 |

| Parts No. | Fig. No. | Ref. No. |
|---|---|---|
| 172B02-94100 | 108 | 3 |
| 172B03-03140 | 3 | 2 |
| | 118 | 2 |
| 172B03-03160 | 1 | 3 |
| | 112 | 2 |
| | 117 | 3 |
| 172B03-03200 | 118 | 6 |
| 172B03-03220 | 3 | 24 |
| | 118 | 24 |
| 172B03-03260 | 2 | 5 |
| 172B03-03390 | 2 | 8 |
| 172B03-03400 | 3 | 15 |
| | 118 | 15 |
| 172B03-03410 | 3 | 16 |
| | 118 | 16 |
| 172B03-03430 | 3 | 18 |
| | 118 | 18 |
| 172B03-03440 | 3 | 19 |
| | 118 | 19 |
| 172B03-03460 | 1 | 12 |
| | 117 | 12 |
| 172B03-03930 | 1 | 17 |
| | 117 | 17 |
| 172B03-03940 | 1 | 18 |
| | 117 | 18 |
| 172B03-04400 | 4 | 8 |
| 172B03-04410 | 4 | 9 |
| 172B03-05250 | 12 | 1 |
| 172B03-05310 | 5 | 1 |
| 172B03-05360 | 5 | 2 |
| 172B03-05400 | 146 | 1 |
| 172B03-05500 | 146 | 2 |
| 172B03-05600 | 146 | 3 |
| 172B03-08160 | 2 | 1 |
| 172B03-08200 | 4 | 1 |
| 172B03-08310 | 109 | 1 |
| 172B03-08350 | 115 | 1 |
| 172B03-08380 | 84 | 1 |
| 172B03-08390 | 13 | 1 |
| 172B03-08550 | 110 | 1 |
| 172B03-08590 | 111 | 1 |
| 172B03-08680 | 112 | 1 |
| 172B03-08690 | 113 | 1 |
| 172B03-08691 | 113 | 1 -1 |
| 172B03-09200 | 112 | 3 |
| 172B03-11350 | 6 | 1 |
| 172B03-11380 | 6 | 2 |
| 172B03-11450 | 16 | 1 |
| | 137 | 1 |
| 172B03-11510 | 7 | 1 |

# Parts No. Index

| Parts No. | Fig. No. | Ref. No. |
|---|---|---|
| 172B03-11520 | 7 | 2 |
| 172B03-11530 | 7 | 3 |
| 172B03-11540 | 7 | 4 |
| 172B03-11550 | 7 | 5 |
| 172B03-11560 | 7 | 6 |
| 172B03-11570 | 7 | 7 |
| 172B03-11600 | 6 | 3 |
| 172B03-11640 | 6 | 5 |
| 172B03-11650 | 6 | 6 |
| 172B03-11680 | 6 | 8 |
| 172B03-11690 | 6 | 9 |
| 172B03-11700 | 6 | 10 |
| 172B03-11730 | 6 | 12 |
| 172B03-11740 | 6 | 13 |
| 172B03-11850 | 6 | 14 |
| 172B03-11851 | 6 | 14 -1 |
| 172B03-13100 | 9 | 3 |
| 172B03-13160 | 11 | 3 |
| 172B03-13170 | 7 | 8 |
| 172B03-13230 | 9 | 8 |
| 172B03-13280 | 9 | 9 |
| 172B03-13290 | 9 | 10 |
| 172B03-13350 | 10 | 1 |
| 172B03-13351 | 10 | 1 -1 |
| 172B03-13400 | 10 | 2 |
| 172B03-13401 | 10 | 2 -1 |
| 172B03-13550 | 11 | 9 |
| 172B03-13560 | 11 | 10 |
| 172B03-13570 | 11 | 11 |
| 172B03-13580 | 11 | 12 |
| 172B03-13600 | 12 | 2 |
| 172B03-13700 | 12 | 4 |
| 172B03-13710 | 12 | 5 |
| 172B03-13800 | 11 | 13 |
| 172B03-13900 | 10 | 3 |
| 172B03-13970 | 10 | 5 |
| 172B03-13980 | 10 | 6 |
| 172B03-14150 | 13 | 18 |
| 172B03-14200 | 13 | 20 |
| 172B03-14220 | 13 | 12 |
| 172B03-14230 | 13 | 22 |
| 172B03-14250 | 13 | 13 |
| 172B03-14270 | 13 | 23 |
| 172B03-14300 | 14 | 5 |
| 172B03-14350 | 14 | 6 |
| 172B03-14610 | 14 | 11 |
| 172B03-14770 | 13 | 29 -1 |
| 172B03-16000 | 109 | 7 |
| 172B03-16100 | 15 | 2 |
| 172B03-16120 | 15 | 4 |

| Parts No. | Fig. No. | Ref. No. |
|---|---|---|
| 172B03-16130 | 24 | 1 |
| | | 9 |
| 172B03-16160 | 15 | 5 |
| 172B03-16170 | 16 | 2 |
| | 137 | 2 |
| 172B03-16181 | 15 | 6 |
| 172B03-16300 | 16 | 3 |
| | 137 | 3 |
| 172B03-16440 | 16 | 4 |
| | 137 | 4 |
| 172B03-16500 | 16 | 5 |
| 172B03-16501 | 137 | 5 |
| 172B03-16502 | 137 | 5 -1 |
| 172B03-16520 | 19 | 2 |
| 172B03-16521 | 19 | 2 -1 |
| 172B03-16550 | 24 | 2 |
| 172B03-16560 | 115 | 2 |
| | 144 | 1 |
| 172B03-16570 | 115 | 3 |
| | 144 | 2 |
| 172B03-16580 | 19 | 2 -2 |
| 172B03-16581 | 19 | 2 -3 |
| 172B03-16582 | 19 | 2 -4 |
| 172B03-16620 | 109 | 8 |
| 172B03-16641 | 113 | 2 |
| | 119 | 7 |
| 172B03-16740 | 115 | 4 |
| | 144 | 3 |
| 172B03-16760 | 115 | 5 |
| | 144 | 4 |
| 172B03-16880 | 19 | 33 |
| 172B03-16890 | 115 | 6 |
| | 144 | 5 |
| 172B03-16950 | 20 | 1 |
| 172B03-17000 | 19 | 10 |
| 172B03-17051 | 19 | 11 |
| 172B03-17100 | 19 | 12 |
| 172B03-17110 | 19 | 12 -1 |
| 172B03-17250 | 25 | 3 |
| 172B03-17251 | 25 | 3 -1 |
| 172B03-17252 | 25 | 3 -2 |
| 172B03-17253 | 25 | 3 -3 |
| 172B03-17259 | 25 | 3 -4 |
| 172B03-17260 | 25 | 3 A |
| 172B03-17261 | 25 | 3 A-1 |
| 172B03-17300 | 25 | 4 |
| 172B03-17301 | 25 | 4 -1 |
| 172B03-17310 | 25 | 5 |
| 172B03-17320 | 25 | 6 |
| 172B03-17350 | 25 | 4 -1A |

| Parts No. | Fig. No. | Ref. No. |
|---|---|---|
| 172B03-17360 | 25 | 5 A |
| 172B03-17370 | 25 | 6 A |
| 172B03-17460 | 24 | 4 |
| 172B03-17470 | 24 | 5 |
| 172B03-17500 | 121 | 27 |
| 172B03-17831 | 109 | 12 |
| 172B03-17851 | 109 | 13 |
| 172B03-17950 | 113 | 3 |
| 172B03-17980 | 109 | 15 |
| 172B03-17990 | 59 | 6 |
| 172B03-36300 | 73 | 1 -1 |
| 172B03-36350 | 26 | 2 -1 |
| 172B03-37100 | 27 | 1 |
| 172B03-37110 | 27 | 2 |
| 172B03-37300 | 134 | 1 |
| 172B03-37320 | 134 | 4 |
| 172B03-37700 | 27 | 14 |
| 172B03-37780 | 27 | 17 |
| 172B03-37840 | 27 | 18 |
| 172B03-37850 | 27 | 19 |
| 172B03-38600 | 30 | 1 |
| 172B03-44201 | 32 | 24 |
| 172B03-44231 | 32 | 25 |
| 172B03-44400 | 21 | 9 |
| 172B03-44500 | 21 | 9 -1 |
| 172B03-45010 | 83 | 1 |
| 172B03-45050 | 83 | 2 |
| 172B03-45070 | 83 | 3 |
| 172B03-45100 | 32 | 2 |
| 172B03-45150 | 32 | 5 |
| 172B03-45200 | 33 | 2 |
| 172B03-45250 | 33 | 6 |
| 172B03-45300 | 33 | 7 |
| 172B03-45320 | 33 | 8 |
| 172B03-45350 | 37 | 2 |
| 172B03-45400 | 32 | 8 |
| 172B03-45450 | 121 | 1 |
| 172B03-45500 | 34 | 2 |
| 172B03-45550 | 35 | 2 |
| 172B03-45580 | 120 | 2 |
| 172B03-45600 | 31 | 1 |
| 172B03-45601 | 31 | 1 -1 |
| 172B03-45602 | 31 | 1 -2 |
| 172B03-45800 | 37 | 5 |
| | 121 | 4 |
| 172B03-45850 | 37 | 6 |
| | 121 | 5 |
| 172B03-45900 | 37 | 7 |
| | 121 | 6 |
| 172B03-45950 | 37 | 10 |

| Parts No. | Fig. No. | Ref. No. |
|---|---|---|
| 172B03-45950 | 121 | 9 |
| 172B03-45990 | 37 | 11 |
| | 121 | 10 |
| 172B03-46010 | 122 | 1 |
| 172B03-46060 | 122 | 2 |
| 172B03-46100 | 38 | 2 |
| 172B03-46200 | 38 | 6 |
| 172B03-46310 | 38 | 8 |
| 172B03-46350 | 38 | 9 |
| 172B03-46400 | 55 | 1 |
| 172B03-46550 | 39 | 10 |
| 172B03-46600 | 39 | 14 |
| 172B03-46630 | 39 | 17 |
| 172B03-46650 | 39 | 18 |
| 172B03-46670 | 39 | 19 |
| 172B03-46750 | 39 | 20 |
| 172B03-46790 | 39 | 24 |
| 172B03-46800 | 39 | 25 |
| 172B03-46810 | 145 | 2 |
| 172B03-46900 | 39 | 26 |
| 172B03-50100 | 40 | 1 |
| 172B03-50760 | 49 | 1 |
| 172B03-53320 | 42 | 2 |
| | 112 | 5 |
| 172B03-53410 | 42 | 5 |
| | 112 | 8 |
| 172B03-54800 | 43 | 5 |
| 172B03-57630 | 44 | 3 A |
| 172B03-57640 | 44 | 3 B |
| 172B03-61010 | 50 | 1 -1 |
| 172B03-61020 | 50 | 1 |
| 172B03-61050 | 46 | 1 |
| 172B03-61070 | 46 | 2 |
| 172B03-61090 | 46 | 3 |
| 172B03-61110 | 50 | 4 -1 |
| 172B03-61120 | 50 | 4 |
| 172B03-61200 | 46 | 4 |
| 172B03-61230 | 46 | 8 |
| 172B03-61260 | 46 | 12 |
| 172B03-61320 | 51 | 1 |
| 172B03-61380 | 51 | 3 |
| 172B03-61400 | 48 | 1 |
| 172B03-61410 | 48 | 2 |
| 172B03-61440 | 48 | 5 |
| 172B03-61450 | 46 | 6 |
| 172B03-61460 | 46 | 10 |
| 172B03-61470 | 46 | 14 |
| 172B03-61480 | 46 | 7 |
| 172B03-61490 | 46 | 15 |
| 172B03-61540 | 46 | 19 |

# Parts No. Index

| Parts No. | Fig. No. | Ref. No. |
|---|---|---|
| 172B03-61540 | 46 | 20 |
| 172B03-61610 | 45 | 1 |
| 172B03-61810 | 47 | 2 |
| 172B03-61820 | 47 | 3 |
| 172B03-61830 | 47 | 4 |
| 172B03-61850 | 84 | 31 |
| 172B03-61870 | 84 | 32 |
| 172B03-61950 | 47 | 6 |
| 172B03-61960 | 47 | 7 |
| 172B03-62050 | 52 | 1 |
| | 123 | 1 |
| 172B03-62100 | 52 | 2 |
| | 123 | 2 |
| 172B03-62110 | 52 | 3 |
| 172B03-62120 | 123 | 3 |
| 172B03-62200 | 52 | 4 |
| | 123 | 4 |
| 172B03-62500 | 52 | 5 |
| | 123 | 5 |
| 172B03-62700 | 52 | 6 |
| | 123 | 6 |
| 172B03-63050 | 54 | 6 |
| 172B03-63110 | 53 | 1 |
| 172B03-63120 | 53 | 2 |
| 172B03-63130 | 53 | 3 |
| 172B03-63210 | 54 | 7 |
| 172B03-63220 | 54 | 8 |
| 172B03-63270 | 54 | 9 |
| 172B03-63400 | 55 | 2 |
| 172B03-63450 | 55 | 5 |
| 172B03-63500 | 54 | 10 |
| 172B03-64010 | 57 | 6 |
| 172B03-64020 | 57 | 7 |
| 172B03-64030 | 57 | 8 |
| 172B03-64040 | 57 | 9 |
| 172B03-64070 | 56 | 3 |
| 172B03-64080 | 56 | 4 |
| 172B03-64190 | 55 | 6 |
| 172B03-64200 | 55 | 3 |
| 172B03-64201 | 55 | 3 -1 |
| 172B03-64202 | 55 | 3 -2 |
| 172B03-64450 | 55 | 12 |
| 172B03-64500 | 56 | 2 |
| 172B03-64510 | 56 | 5 |
| 172B03-64570 | 56 | 6 |
| 172B03-64600 | 56 | 11 |
| 172B03-64650 | 56 | 12 |
| 172B03-64670 | 56 | 14 |
| 172B03-64680 | 56 | 7 |
| 172B03-64690 | 56 | 8 |

| Parts No. | Fig. No. | Ref. No. |
|---|---|---|
| 172B03-64700 | 59 | 1 |
| 172B03-64780 | 59 | 8 |
| 172B03-64830 | 57 | 4 |
| 172B03-64831 | 57 | 4 -1 |
| 172B03-64832 | 57 | 4 -2 |
| 172B03-64850 | 57 | 5 |
| 172B03-64960 | 57 | 11 |
| 172B03-64990 | 55 | 25 |
| 172B03-65100 | 60 | 2 |
| 172B03-65170 | 60 | 7 |
| 172B03-65200 | 60 | 8 |
| 172B03-65250 | 60 | 9 |
| 172B03-65290 | 60 | 10 |
| 172B03-65310 | 60 | 11 |
| 172B03-65320 | 60 | 4 |
| 172B03-65330 | 60 | 5 |
| 172B03-65340 | 60 | 6 |
| 172B03-65350 | 65 | 1 |
| 172B03-65391 | 60 | 12 |
| 172B03-65410 | 61 | 1 |
| 172B03-65600 | 62 | 1 |
| 172B03-65650 | 62 | 3 |
| 172B03-65660 | 62 | 4 |
| 172B03-65670 | 62 | 5 |
| 172B03-65680 | 62 | 6 |
| 172B03-65780 | 84 | 33 |
| 172B03-65800 | 63 | 1 |
| 172B03-65820 | 63 | 5 |
| 172B03-65870 | 63 | 4 |
| 172B03-65880 | 63 | 7 |
| 172B03-65890 | 63 | 8 |
| 172B03-65900 | 63 | 10 |
| 172B03-65920 | 65 | 2 |
| 172B03-65940 | 63 | 9 |
| 172B03-65950 | 63 | 11 |
| 172B03-66170 | 47 | 8 |
| | 60 | 14 |
| 172B03-67100 | 64 | 2 |
| 172B03-67150 | 64 | 3 |
| 172B03-67151 | 64 | 3 -1 |
| 172B03-67360 | 64 | 4 |
| 172B03-67410 | 110 | 3 |
| 172B03-67510 | 65 | 3 |
| 172B03-67511 | 65 | 3 -1 |
| 172B03-67760 | 64 | 11 |
| 172B03-67810 | 65 | 4 |
| 172B03-70100 | 138 | 1 |
| 172B03-70130 | 138 | 11 |
| | | 14 |
| 172B03-70140 | 138 | 2 |

| Parts No. | Fig. No. | Ref. No. |
|---|---|---|
| 172B03-70150 | 138 | 3 |
| 172B03-70160 | 138 | 4 |
| 172B03-70170 | 138 | 5 |
| 172B03-70180 | 138 | 6 |
| 172B03-70240 | 138 | 7 |
| 172B03-70250 | 138 | 8 |
| 172B03-70260 | 138 | 9 |
| 172B03-70270 | 138 | 12 |
| 172B03-70280 | 138 | 15 |
| 172B03-70290 | 138 | 18 |
| 172B03-70320 | 139 | 7 |
| | | 29 |
| 172B03-70340 | 139 | 3 |
| 172B03-70370 | 139 | 8 |
| 172B03-70420 | 139 | 20 |
| 172B03-70430 | 139 | 21 |
| 172B03-70440 | 139 | 22 |
| 172B03-70450 | 139 | 23 |
| 172B03-70460 | 139 | 24 |
| 172B03-70470 | 139 | 25 |
| 172B03-70480 | 139 | 26 |
| 172B03-70490 | 139 | 27 |
| 172B03-70500 | 140 | 1 |
| 172B03-70530 | 140 | 2 |
| 172B03-70540 | 140 | 3 |
| 172B03-70620 | 140 | 4 |
| 172B03-70630 | 140 | 5 |
| 172B03-70640 | 140 | 8 |
| 172B03-70650 | 140 | 11 |
| 172B03-70660 | 140 | 14 |
| 172B03-70700 | 141 | 1 |
| 172B03-70730 | 141 | 2 |
| 172B03-70740 | 141 | 3 |
| 172B03-70760 | 141 | 4 |
| 172B03-70770 | 141 | 7 |
| 172B03-70780 | 141 | 10 |
| 172B03-70790 | 141 | 13 |
| 172B03-70800 | 142 | 1 |
| 172B03-70840 | 142 | 2 |
| 172B03-70850 | 142 | 3 |
| 172B03-70860 | 142 | 6 |
| 172B03-70870 | 141 | 6 -2 |
| 172B03-71100 | 66 | 1 -1 |
| 172B03-72010 | 68 | 6 |
| 172B03-72020 | 68 | 7 |
| 172B03-72050 | 70 | 7 |
| 172B03-72070 | 71 | 2 |
| 172B03-72080 | 72 | 2 |
| 172B03-72101 | 68 | 5 |
| 172B03-72111 | 68 | 17 |

| Parts No. | Fig. No. | Ref. No. |
|---|---|---|
| 172B03-72151 | 68 | 21 |
| 172B03-72180 | 68 | 22 |
| 172B03-72200 | 68 | 23 |
| 172B03-72240 | 68 | 39 |
| | 138 | 37 |
| 172B03-72250 | 68 | 27 |
| 172B03-72270 | 68 | 14 |
| 172B03-72291 | 68 | 20 |
| | | 26 |
| 172B03-72340 | 69 | 5 |
| | 70 | 5 |
| | 139 | 42 |
| | 140 | 36 |
| 172B03-72390 | 71 | 3 |
| 172B03-72401 | 69 | 26 |
| 172B03-72500 | 70 | 6 |
| 172B03-72501 | 70 | 6 -1 |
| | | 6 -2 |
| 172B03-72510 | 70 | 21 |
| 172B03-72550 | 70 | 25 |
| 172B03-72570 | 70 | 8 |
| 172B03-72580 | 70 | 26 |
| 172B03-72600 | 70 | 27 |
| 172B03-72601 | 70 | 27 -1 |
| 172B03-72650 | 70 | 31 |
| 172B03-72670 | 69 | 46 |
| | 70 | 40 |
| | 139 | 44 |
| | 140 | 38 |
| 172B03-72700 | 71 | 1 |
| 172B03-72710 | 71 | 14 |
| 172B03-72740 | 71 | 18 |
| 172B03-72750 | 71 | 19 |
| 172B03-72780 | 71 | 23 |
| 172B03-72800 | 72 | 1 |
| 172B03-72810 | 72 | 14 |
| 172B03-72850 | 72 | 18 |
| 172B03-72880 | 72 | 22 |
| 172B03-72900 | 72 | 29 |
| | 142 | 24 |
| 172B03-72930 | 69 | 15 |
| | 72 | 9 |
| 172B03-72950 | 72 | 23 |
| 172B03-73300 | 73 | 2 |
| 172B03-73320 | 73 | 11 |
| 172B03-73330 | 73 | 16 |
| 172B03-73340 | 73 | 17 |
| 172B03-73350 | 73 | 18 |
| 172B03-73360 | 73 | 19 |
| 172B03-73370 | 73 | 20 |

# Parts No. Index


| Parts No. | Fig. No. | Ref. No. |
|---|---|---|
| 172B03-73410 | 73 | 21 |
| 172B03-73420 | 73 | 40 |
| 172B03-73450 | 73 | 86 |
| 172B03-73460 | 73 | 50 |
| 172B03-73470 | 73 | 52 |
| 172B03-73471 | 73 | 52 -1 |
| 172B03-73480 | 73 | 81 |
| 172B03-73600 | 98 | 1 |
| 172B03-73800 | 75 | 1 |
| 172B03-73810 | 75 | 2 |
| 172B03-74490 | 97 | 8 |
| | 133 | 5 |
| 172B03-74500 | 83 | 10 |
| 172B03-74530 | 131 | 1 |
| 172B03-74560 | 132 | 1 |
| 172B03-74590 | 131 | 6 |
| | 132 | 6 |
| 172B03-74630 | 83 | 18 |
| 172B03-74650 | 131 | 13 |
| 172B03-74660 | 131 | 14 |
| 172B03-74680 | 132 | 15 |
| 172B03-74720 | 135 | 4 |
| 172B03-74750 | 135 | 5 |
| 172B03-74770 | 135 | 10 |
| 172B03-74790 | 135 | 11 |
| 172B03-74800 | 11 | 21 |
| 172B03-74860 | 135 | 6 |
| 172B03-74870 | 135 | 7 |
| 172B03-74880 | 135 | 8 |
| 172B03-74900 | 96 | 1 |
| 172B03-74930 | 135 | 1 |
| 172B03-75400 | 84 | 15 |
| 172B03-75450 | 84 | 16 |
| 172B03-76010 | 86 | 1 |
| | 88 | 1 |
| | 92 | 1 |
| | 93 | 1 |
| | 97 | 2 |
| | 101 | 7 -1 |
| | 136 | 1 |
| 172B03-76030 | 98 | 3 |
| 172B03-76070 | 87 | 1 |
| 172B03-76080 | 88 | 15 |
| 172B03-76090 | 86 | 3 |
| 172B03-76110 | 87 | 2 |
| | 93 | 5 |
| | 95 | 9 |
| 172B03-76120 | 87 | 4 |
| 172B03-76130 | 87 | 8 |
| | | 24 |

| Parts No. | Fig. No. | Ref. No. |
|---|---|---|
| 172B03-76130 | 92 | 3 |
| 172B03-76150 | 93 | 9 |
| 172B03-76160 | 87 | 13 |
| | 95 | 11 |
| 172B03-76170 | 87 | 15 |
| 172B03-76180 | 136 | 6 |
| 172B03-76190 | 87 | 17 |
| 172B03-76220 | 94 | 1 |
| 172B03-76310 | 88 | 12 |
| 172B03-76400 | 94 | 3 |
| 172B03-76410 | 94 | 4 |
| 172B03-76420 | 94 | 5 |
| 172B03-76440 | 94 | 6 |
| 172B03-76450 | 94 | 7 |
| 172B03-76470 | 94 | 8 |
| 172B03-76511 | 96 | 6 |
| 172B03-76630 | 87 | 19 |
| 172B03-77610 | 95 | 26 |
| 172B03-77661 | 95 | 27 |
| 172B03-77710 | 102 | 7 |
| 172B03-77900 | 96 | 15 |
| | | 15 -1 |
| 172B03-78050 | 55 | 13 |
| 172B03-78110 | 85 | 14 |
| 172B03-78120 | 85 | 15 |
| 172B03-78130 | 85 | 16 |
| 172B03-78160 | 90 | 1 |
| 172B03-78170 | 90 | 2 |
| 172B03-78180 | 91 | 1 |
| 172B03-78190 | 91 | 2 |
| 172B03-78200 | 92 | 6 |
| 172B03-78220 | 90 | 3 |
| 172B03-78230 | 90 | 4 |
| 172B03-78240 | 90 | 5 |
| 172B03-78250 | 90 | 6 |
| 172B03-78280 | 92 | 7 |
| 172B03-78290 | 92 | 8 |
| 172B03-78300 | 89 | 1 |
| 172B03-78310 | 85 | 18 |
| 172B03-78320 | 93 | 14 |
| 172B03-78330 | 93 | 15 |
| 172B03-78340 | 93 | 16 |
| 172B03-78350 | 93 | 17 |
| 172B03-78360 | 93 | 18 |
| 172B03-78370 | 93 | 19 |
| 172B03-78380 | 93 | 20 |
| 172B03-78390 | 93 | 21 |
| 172B03-78510 | 86 | 14 |
| 172B03-78520 | 92 | 9 |
| 172B03-78530 | 89 | 2 |

| Parts No. | Fig. No. | Ref. No. |
|---|---|---|
| 172B03-78540 | 89 | 3 |
| 172B03-78550 | 89 | 4 |
| 172B03-78560 | 89 | 5 |
| 172B03-78570 | 89 | 6 |
| 172B03-78600 | 85 | 19 |
| 172B03-78610 | 86 | 15 |
| 172B03-78620 | 89 | 7 |
| 172B03-78630 | 92 | 10 |
| 172B03-78640 | 89 | 8 |
| 172B03-78650 | 89 | 9 |
| 172B03-78700 | 89 | 10 |
| 172B03-78720 | 89 | 11 |
| 172B03-78760 | 89 | 12 |
| 172B03-78850 | 97 | 15 |
| 172B03-78860 | 97 | 16 |
| 172B03-78910 | 97 | 17 |
| | 133 | 12 |
| 172B03-78920 | 97 | 18 |
| | 133 | 13 |
| 172B03-78930 | 97 | 19 |
| 172B03-78940 | 97 | 20 |
| 172B03-78950 | 97 | 21 |
| 172B03-78960 | 97 | 22 |
| 172B03-79010 | 101 | 13 |
| 172B03-79020 | 101 | 14 |
| 172B03-79110 | 95 | 16 |
| 172B03-79120 | 95 | 17 |
| 172B03-79130 | 95 | 18 |
| 172B03-79140 | 95 | 19 |
| 172B03-79150 | 95 | 20 |
| 172B03-79211 | 136 | 10 |
| 172B03-79230 | 136 | 11 |
| 172B03-79240 | 136 | 12 |
| 172B03-79241 | 136 | 12 -1 |
| 172B03-79250 | 136 | 13 |
| 172B03-79550 | 97 | 9 |
| | 133 | 6 |
| 172B03-79560 | 97 | 29 |
| | 133 | 26 |
| 172B03-79570 | 97 | 10 |
| | 133 | 7 |
| 172B03-79620 | 133 | 14 |
| 172B03-79640 | 133 | 15 |
| 172B03-79650 | 133 | 16 |
| 172B03-79660 | 133 | 17 |
| 172B03-79670 | 97 | 23 |
| | 133 | 18 |
| 172B03-79690 | 97 | 24 |
| | 133 | 19 |
| 172B03-79720 | 90 | 7 |

| Parts No. | Fig. No. | Ref. No. |
|---|---|---|
| 172B03-79750 | 133 | 20 |
| 172B03-79760 | 133 | 21 |
| 172B03-79770 | 97 | 25 |
| | 133 | 22 |
| 172B03-79780 | 97 | 26 |
| | 133 | 23 |
| 172B03-79811 | 95 | 23 |
| 172B03-79860 | 94 | 15 |
| | | 16 |
| | | 22 |
| 172B03-79870 | 94 | 17 |
| | | 18 |
| | | 23 |
| 172B03-79950 | 90 | 8 |
| 172B03-79970 | 90 | 9 |
| 172B03-81760 | 68 | 44 |
| | 138 | 42 |
| 172B03-81780 | 105 | 8 |
| 172B03-81800 | 105 | 9 |
| 172B03-81820 | 68 | 45 |
| | 105 | 10 |
| | 138 | 43 |
| 172B03-81851 | 107 | 1 |
| 172B03-81871 | 106 | 9 |
| 172B03-81901 | 107 | 3 |
| 172B03-81902 | 107 | 3 -1 |
| 172B03-81920 | 106 | 10 |
| 172B03-81950 | 71 | 34 |
| | 141 | 29 |
| 172B03-82600 | 107 | 6 |
| 172B03-82601 | 107 | 6 -1 |
| 172B03-82620 | 107 | 11 |
| | 114 | 5 |
| 172B03-82621 | 107 | 11 -1 |
| | 114 | 5 -1 |
| 172B03-82651 | 107 | 12 |
| 172B03-82661 | 107 | 13 |
| 172B04-17920 | 113 | 3 -1 |
| | 119 | 1 |
| 172B05-74730 | 135 | 11 -1 |
| 172B11-72560 | 138 | 28 |
| | 139 | 32 |
| 172B16-17170 | 115 | 10 -1 |
| 172B16-71200 | 140 | 22 |
| | 141 | 20 |
| | 142 | 11 |
| 172B16-71210 | 142 | 12 |
| 172B16-72090 | 140 | 23 |
| | 141 | 21 |
| 172B16-72140 | 140 | 24 |

# Parts No. Index


| Parts No. | Fig. No. | Ref. No. |
|---|---|---|
| 172B16-72140 | 141 | 22 |
| | 142 | 13 |
| 172B16-72150 | 140 | 25 |
| | 141 | 23 |
| | 142 | 14 |
| 172B16-72400 | 140 | 10 |
| 172B16-72430 | 142 | 15 |
| 172B16-72460 | 138 | 26 |
| 172B16-72470 | 138 | 27 |
| 172B16-72540 | 140 | 26 |
| 172B16-72750 | 142 | 16 |
| 172B16-72760 | 142 | 19 |
| 172B16-72860 | 140 | 7 |
| | 141 | 9 |
| | 142 | 18 |
| | | 21 |
| 172B16-72870 | 142 | 22 |
| 172B16-72880 | 142 | 23 |
| 172B71-62620 | 52 | 1 -1 |
| | 123 | 1 -1 |
| 184012-59100 | 14 | 34 |
| 184014-59640 | 13 | 29 |
| 184015-44680 | 11 | 17 |
| 184016-55701 | 14 | 21 |
| 184016-55710 | 14 | 24 |
| 184016-59300 | 14 | 38 |
| 194151-57100 | 18 | 1 |
| 194200-37780 | 33 | 1 |
| | 39 | 2 |
| 194202-56460 | 16 | 13 |
| | | 28 |
| | 17 | 2 |
| | 89 | 16 |
| | 101 | 1 |
| | | 2 |
| | 109 | 20 |
| | 115 | 8 |
| | 137 | 14 |
| | | 15 |
| | | 27 |
| | 144 | 7 |
| 194440-51620 | 19 | 17 |
| 194630-42120 | 27 | 11 |
| | 29 | 6 |
| 194680-51670 | 11 | 18 |
| | 16 | 11 |
| | | 12 |
| | | 12 -1 |
| | 19 | 18 |
| | 113 | 4 |

| Parts No. | Fig. No. | Ref. No. |
|---|---|---|
| 194680-51670 | 137 | 12 |
| | | 13 |
| 194940-52110 | 21 | 1 |
| 196420-02310 | 9 | 1 |
| 198071-57110 | 115 | 9 |
| | 144 | 8 |
| 198071-61890 | 54 | 5 |
| 198153-51700 | 16 | 10 |
| | 137 | 10 |
| 198220-61480 | 46 | 17 |
| | | 18 |
| 198360-52160 | 21 | 6 |
| | 143 | 4 |
| 198360-52320 | 21 | 3 |
| 198360-52330 | 21 | 4 |
| 198461-52950 | 19 | 19 |
| | 109 | 19 |
| 198535-52110 | 19 | 5 |
| 198535-52120 | 19 | 6 |
| 198535-52130 | 19 | 7 |
| 198535-52170 | 19 | 8 |
| 1A1030-48250 | 28 | 5 |
| | 134 | 5 |
| 1A1040-43900 | 34 | 1 |
| 1A1040-45890 | 33 | 15 |
| | 39 | 4 |
| | | 5 |
| 1A1380-62160 | 47 | 16 |
| 1A1686-57850 | 19 | 17 -1 |
| 1A6240-37360 | 73 | 3 |
| | 74 | 3 |
| | | 4 |
| 1A7130-51130 | 19 | 4 |
| | | 4 -1 |
| | | 4 -2 |
| 1A7180-52111 | 143 | 1 |
| 1A7400-61250 | 12 | 9 |
| | 84 | 30 |
| 1A7610-62250 | 57 | 2 |
| 1A7611-86251 | 113 | 5 -1 |
| | 119 | 2 |
| 1A7611-86270 | 113 | 6 |
| | 119 | 4 |
| 1A7611-86351 | 113 | 5 |
| 1C6281-52310 | 32 | 14 |
| | 33 | 21 |
| | 37 | 12 |
| | | 13 |
| | | 14 |
| | 39 | 27 |

| Parts No. | Fig. No. | Ref. No. |
|---|---|---|
| 1C6281-52310 | 60 | 1 |
| | 121 | 11 |
| | | 12 |
| | | 13 |
| 1C6281-52320 | 39 | 28 |
| 1C7100-99650 | 5 | 10 |
| | 146 | 7 |
| 1D4103-18300 | 17 | 1 |
| | 19 | 16 |
| 1D4105-11950 | 11 | 1 |
| 1D4105-11990 | 11 | 2 |
| 1E3030-78370 | 88 | 17 |
| 1E6740-64200 | 33 | 22 |
| | 39 | 29 |
| 1E8080-78890 | 55 | 23 |
| 1E8235-84910 | 19 | 9 A |
| | 137 | 11 |
| 1E8915-84120 | 24 | 6 |
| 1E9570-83900 | 19 | 9 |
| 1RF001-00021 | 109 | 2 |
| 1RF001-93000 | 109 | 27 |
| 22117-040000 | 32 | 15 |
| 22117-060000 | 60 | 18 |
| 22117-080000 | 32 | 16 |
| | 33 | 23 |
| | 39 | 30 |
| | | 31 |
| 22117-100000 | 5 | 6 |
| | 6 | 16 |
| | 12 | 11 |
| | 39 | 32 |
| | 67 | 2 |
| 22137-050000 | 25 | 7 |
| | 37 | 15 |
| | | 16 |
| | | 17 |
| | 121 | 14 |
| | | 15 |
| | | 16 |
| 22137-060000 | 11 | 22 |
| | 14 | 42 |
| 22137-080000 | 6 | 17 |
| | 35 | 3 |
| | | 4 |
| | 38 | 12 |
| | 39 | 33 |
| | 47 | 18 |
| | 52 | 7 |
| | 56 | 15 |
| | 84 | 34 |

| Parts No. | Fig. No. | Ref. No. |
|---|---|---|
| 22137-080000 | 103 | 22 |
| | 120 | 3 |
| | | 4 |
| | 123 | 7 |
| 22137-100000 | 6 | 18 |
| | 9 | 12 |
| | 10 | 8 |
| | 13 | 33 |
| | 15 | 8 |
| | 16 | 15 |
| | | 16 |
| | 19 | 23 |
| | 24 | 7 |
| | | 10 |
| | 33 | 24 |
| | 55 | 14 |
| | 57 | 12 |
| | 65 | 5 |
| | 84 | 35 |
| | | 36 |
| | 95 | 29 |
| | 96 | 16 |
| | 103 | 23 |
| | 113 | 8 |
| | 119 | 5 |
| | 137 | 17 |
| | | 18 |
| | 138 | 31 |
| | 139 | 35 |
| | 140 | 29 |
| 22137-120000 | 49 | 3 |
| | 64 | 5 |
| | 65 | 6 |
| 22137-140000 | 37 | 18 |
| | 84 | 37 |
| | 121 | 17 |
| 22137-160000 | 65 | 7 |
| 22137-200000 | 38 | 13 |
| 22157-060000 | 15 | 9 |
| | 60 | 19 |
| 22157-080000 | 19 | 24 |
| | 37 | 19 |
| | 121 | 18 |
| 22157-100000 | 31 | 2 |
| | 50 | 2 |
| | | 5 |
| | 52 | 8 |
| | 57 | 13 |
| | 61 | 3 |
| | 123 | 8 |

# Parts No. Index


| Parts No. | Fig. No. | Ref. No. |
|---|---|---|
| 22157-120000 | 68 | 48 |
| | 71 | 38 |
| | 103 | 24 |
| | 105 | 14 |
| | | 15 |
| | 106 | 15 |
| | 108 | 10 |
| | 138 | 46 |
| | 141 | 33 |
| 22157-160000 | 59 | 2 |
| 22190-120002 | 84 | 21 |
| 22212-080000 | 67 | 29 |
| 22217-050000 | 25 | 8 |
| 22217-060000 | 16 | 17 |
| | 137 | 19 |
| 22217-080000 | 14 | 43 |
| | 15 | 10 |
| | 33 | 25 |
| | 39 | 34 |
| | 56 | 16 |
| 22217-100000 | 6 | 19 |
| | 9 | 13 |
| | 33 | 26 |
| | 39 | 35 |
| | 65 | 8 |
| | 68 | 49 |
| | 69 | 48 |
| | | 49 |
| | 70 | 42 |
| | | 43 |
| | 116 | 6 |
| | 138 | 47 |
| | 139 | 46 |
| | | 47 |
| | 140 | 40 |
| | | 41 |
| 22217-120000 | 9 | 14 |
| | | 15 |
| | 26 | 3 |
| | 65 | 9 |
| | 73 | 100 |
| 22217-140000 | 29 | 12 |
| | 84 | 38 |
| 22217-160000 | 28 | 10 |
| | 59 | 3 |
| | 64 | 6 |
| | | 6 -1 |
| | 65 | 10 |
| | 134 | 11 |
| 22242-000140 | 37 | 20 |

| Parts No. | Fig. No. | Ref. No. |
|---|---|---|
| 22242-000140 | 121 | 19 |
| 22242-000200 | 38 | 14 |
| 22242-000210 | 95 | 2 |
| 22242-000250 | 29 | 7 |
| | 67 | 30 |
| | 95 | 3 |
| 22242-000260 | 69 | 41 |
| 22242-000300 | 27 | 12 |
| 22242-000350 | 73 | 47 |
| | 103 | 25 |
| 22242-000451 | 75 | 6 |
| | 116 | 7 |
| 22242-000700 | 104 | 8 |
| 22252-000250 | 103 | 26 |
| 22252-000300 | 103 | 27 |
| 22252-000520 | 67 | 31 |
| 22252-000521 | 29 | 8 |
| 22252-000620 | 28 | 6 |
| | 134 | 6 |
| 22252-000750 | 28 | 7 |
| | 134 | 7 |
| 22272-000070 | 38 | 15 |
| | 46 | 23 |
| | | 24 |
| | 60 | 20 |
| 22312-050100 | 77 | 19 |
| | 125 | 19 |
| 22351-030028 | 23 | 16 |
| 22351-035040 | 38 | 16 |
| 22351-060016 | 67 | 32 |
| 22351-060040 | 38 | 17 |
| 22372-080000 | 84 | 39 |
| 22417-200200 | 38 | 18 |
| | 47 | 19 |
| | 57 | 14 |
| 22417-250200 | 5 | 7 |
| | 33 | 27 |
| | 39 | 36 |
| 22417-320200 | 12 | 12 |
| 22487-100600 | 39 | 37 |
| 22853-300161 | 131 | 16 |
| | 132 | 16 |
| 22857-600160 | 60 | 21 |
| 22859-500160 | 58 | 8 |
| 22859-500200 | 58 | 8 -1 |
| 23000-013000 | 13 | 15 |
| | 89 | 13 |
| | 92 | 11 |
| | 97 | 28 |
| | 133 | 25 |

| Parts No. | Fig. No. | Ref. No. |
|---|---|---|
| 23000-013000 | 136 | 14 |
| 23000-070000 | 7 | 9 |
| | | 10 |
| 23001-019000 | 89 | 14 |
| | 95 | 21 |
| | | 21 -1 |
| 23001-025000 | 85 | 20 |
| 23001-035000 | 85 | 21 |
| | | 21 -1 |
| | 86 | 16 |
| | 89 | 15 |
| | | 15 -1 |
| | 95 | 22 |
| 23001-041000 | 11 | 23 |
| | | 24 |
| | | 25 |
| 23001-048000 | 11 | 26 |
| 23001-060000 | 85 | 22 |
| 23061-050300 | 14 | 44 |
| 23080-013000 | 13 | 34 |
| 23871-005000 | 100 | 31 |
| 23871-010000 | 88 | 10 |
| 23871-020000 | 75 | 7 |
| | 88 | 11 |
| | 116 | 8 |
| 23871-030000 | 84 | 22 |
| | 86 | 5 |
| 23871-040000 | 86 | 6 |
| 24101-060024 | 73 | 73 |
| 24101-060044 | 73 | 74 |
| 24101-062054 | 29 | 9 |
| 24101-062064 | 134 | 8 |
| 24102-062054 | 29 | 10 |
| 24311-000060 | 77 | 20 |
| | 125 | 20 |
| 24311-000120 | 78 | 10 |
| | 79 | 10 |
| | 80 | 12 |
| | | 29 |
| | 82 | 22 |
| | 126 | 10 |
| | 127 | 10 |
| | 128 | 27 |
| | 130 | 22 |
| 24311-000160 | 11 | 7 |
| | 14 | 25 |
| 24311-000180 | 98 | 2 |
| 24311-000200 | 77 | 46 |
| | 125 | 46 |
| 24311-000210 | 33 | 28 |

| Parts No. | Fig. No. | Ref. No. |
|---|---|---|
| 24311-000210 | 34 | 7 |
| | 37 | 21 |
| | 39 | 38 |
| | 121 | 20 |
| 24311-000480 | 103 | 28 |
| 24311-000750 | 75 | 13 |
| 24315-000050 | 81 | 19 |
| | 129 | 19 |
| 24315-000070 | 67 | 70 |
| 24315-000080 | 22 | 3 |
| | | 5 |
| | 67 | 71 |
| | 77 | 21 |
| | 79 | 30 |
| | 81 | 20 |
| | 125 | 21 |
| | 127 | 30 |
| | 129 | 20 |
| 24315-000090 | 78 | 27 |
| | 126 | 27 |
| 24315-000100 | 67 | 63 |
| | 77 | 22 |
| | 78 | 28 |
| | 125 | 22 |
| | 126 | 28 |
| 24315-000110 | 67 | 72 |
| | | 73 |
| | 77 | 23 |
| | | 44 |
| | 78 | 11 |
| | | 25 |
| | 79 | 11 |
| | 80 | 13 |
| | | 30 |
| | 81 | 21 |
| | | 35 |
| | 82 | 11 |
| | | 23 |
| | 87 | 11 |
| | 101 | 5 |
| | 125 | 23 |
| | | 44 |
| | 126 | 11 |
| | | 25 |
| | 127 | 11 |
| | 128 | 14 |
| | | 28 |
| | 129 | 21 |
| | | 35 |
| | 130 | 11 |

# Parts No. Index


| Parts No. | Fig. No. | Ref. No. |
|---|---|---|
| 24315-000110 | 130 | 23 |
| | 136 | 5 |
| 24315-000120 | 67 | 74 |
| | 73 | 13 |
| 24315-000140 | 73 | 14 |
| | | 48 |
| | 77 | 24 |
| | 80 | 31 |
| | 85 | 7 |
| | | 10 |
| | 86 | 8 |
| | | 10 |
| | | 12 |
| | 87 | 22 |
| | 125 | 24 |
| | 128 | 15 |
| 24315-000180 | 68 | 35 |
| | 69 | 40 |
| | 70 | 36 |
| | 77 | 25 |
| | 87 | 7 |
| | 125 | 25 |
| | 138 | 30 |
| | 139 | 34 |
| | 140 | 28 |
| 24315-000200 | 83 | 24 |
| | 131 | 21 |
| | 132 | 19 |
| | 135 | 9 |
| 24315-000210 | 95 | 4 |
| 24315-000220 | 69 | 18 |
| 24315-000240 | 95 | 8 |
| 24315-000250 | 95 | 5 |
| 24315-000560 | 116 | 13 |
| 24315-000750 | 116 | 14 |
| 24321-000300 | 27 | 13 |
| 24321-000400 | 67 | 3 |
| 24321-000650 | 14 | 26 |
| 24321-000700 | 75 | 14 |
| 24321-001050 | 84 | 23 |
| 24325-000400 | 27 | 21 |
| 24325-000550 | 67 | 75 |
| 24325-000700 | 116 | 15 |
| 24325-001550 | 73 | 49 |
| 24341-000300 | 84 | 24 |
| 24550-025150 | 100 | 19 |
| 24550-040300 | 70 | 34 |
| | 71 | 25 |
| | 72 | 25 |
| 24550-045300 | 68 | 29 |

| Parts No. | Fig. No. | Ref. No. |
|---|---|---|
| 24761-020000 | 27 | 20 |
| | 32 | 17 |
| | 33 | 29 |
| | 38 | 5 |
| | 39 | 39 |
| | 68 | 36 |
| | | 50 |
| | 103 | 29 |
| | 105 | 16 |
| | 106 | 16 |
| | 107 | 14 |
| | | 15 |
| | 108 | 11 |
| | 114 | 10 |
| | 138 | 32 |
| | | 48 |
| 24761-040000 | 33 | 30 |
| | 69 | 42 |
| | 70 | 37 |
| | 99 | 7 |
| | 105 | 17 |
| | 106 | 17 |
| | 108 | 12 |
| | 139 | 36 |
| | 140 | 30 |
| 24761-050000 | 71 | 30 |
| | 100 | 32 |
| | 141 | 25 |
| 26013-060122 | 10 | 9 |
| | 11 | 27 |
| | | 28 |
| | 18 | 2 |
| | 19 | 25 |
| | | 26 |
| | 56 | 10 |
| | 84 | 40 |
| 26013-060162 | 11 | 29 |
| | 14 | 45 |
| 26013-060202 | 19 | 27 |
| 26013-060302 | 83 | 7 |
| | 131 | 23 |
| | 132 | 21 |
| 26013-080122 | 47 | 12 |
| | | 13 |
| 26013-080162 | 6 | 20 |
| | 11 | 30 |
| | 12 | 13 |
| | 13 | 35 |
| | 14 | 46 |
| | 16 | 18 |

| Parts No. | Fig. No. | Ref. No. |
|---|---|---|
| 26013-080162 | 16 | 19 |
| | | 26 |
| | 19 | 28 |
| | 33 | 31 |
| | 34 | 8 |
| | 35 | 5 |
| | | 6 |
| | 37 | 22 |
| | 39 | 40 |
| | | 41 |
| | 52 | 9 |
| | 55 | 15 |
| | | 16 |
| | 57 | 15 |
| | 101 | 16 |
| | | 17 |
| | 103 | 30 |
| | 109 | 23 |
| | 120 | 5 |
| | | 6 |
| | 121 | 21 |
| | 123 | 9 |
| | 135 | 2 |
| | 137 | 20 |
| | | 21 |
| | 145 | 3 |
| 26013-080202 | 32 | 18 |
| 26013-080252 | 19 | 29 |
| 26013-080302 | 11 | 31 |
| 26013-100162 | 10 | 10 |
| | 24 | 8 |
| | | 11 |
| | 76 | 2 |
| | 94 | 19 |
| | | 24 |
| | 124 | 2 |
| 26013-100202 | 5 | 8 |
| | 6 | 21 |
| | 13 | 36 |
| | 14 | 47 |
| | 15 | 11 |
| | 16 | 20 |
| | | 21 |
| | | 22 |
| | 19 | 30 |
| | 20 | 2 |
| | 31 | 3 |
| | 33 | 32 |
| | 37 | 23 |
| | 46 | 25 |

| Parts No. | Fig. No. | Ref. No. |
|---|---|---|
| 26013-100202 | 49 | 4 |
| | 54 | 11 |
| | 57 | 16 |
| | 68 | 37 |
| | 84 | 41 |
| | | 42 |
| | 88 | 13 |
| | 97 | 11 |
| | 98 | 4 |
| | 103 | 31 |
| | 113 | 9 |
| | | 10 -1 |
| | 119 | 6 |
| | 121 | 22 |
| | 133 | 8 |
| | 135 | 3 |
| | 137 | 22 |
| | | 23 |
| | | 24 |
| 26013-100252 | 7 | 11 |
| | 9 | 16 |
| | 20 | 3 |
| | 31 | 4 |
| | 50 | 3 |
| | | 6 |
| | 61 | 4 |
| | 63 | 12 |
| | 71 | 39 |
| | 85 | 12 |
| | 108 | 13 |
| | 110 | 5 |
| | 113 | 10 |
| | 141 | 34 |
| 26013-100302 | 9 | 17 |
| | 52 | 10 |
| | 66 | 2 |
| | 67 | 4 |
| | 123 | 10 |
| 26013-100352 | 75 | 8 |
| 26013-100402 | 27 | 24 |
| | 75 | 15 |
| | 116 | 16 |
| 26013-100452 | 10 | 11 |
| | 94 | 20 |
| 26013-100502 | 16 | 27 |
| | 66 | 3 |
| | 96 | 17 |
| 26013-100552 | 95 | 6 |
| 26013-100652 | 95 | 30 |
| | 96 | 18 |

# Parts No. Index


| Parts No. | Fig. No. | Ref. No. |
|---|---|---|
| 26013-100702 | 55 | 17 |
| 26013-100852 | 10 | 12 |
| | 90 | 10 |
| 26013-120202 | 105 | 18 |
| 26013-120252 | 49 | 5 |
| | 68 | 51 |
| | 95 | 24 |
| | 96 | 19 |
| | 105 | 19 |
| | | 20 |
| | | 21 |
| | 106 | 18 |
| | 138 | 49 |
| 26013-120302 | 64 | 7 |
| | | 8 |
| | 71 | 40 |
| | 73 | 1 |
| | 103 | 32 |
| | 108 | 14 |
| | 141 | 35 |
| 26013-120352 | 26 | 2 |
| | 45 | 2 |
| | 67 | 5 |
| 26013-120402 | 43 | 6 |
| | 96 | 20 |
| 26013-120502 | 96 | 21 |
| 26013-120702 | 96 | 22 |
| 26014-060122 | 6 | 22 |
| | 19 | 31 |
| | 115 | 11 |
| | 144 | 10 |
| 26014-060162 | 19 | 32 |
| | 25 | 9 |
| | 55 | 26 |
| | 109 | 25 |
| | | 26 |
| | 115 | 12 |
| | 144 | 11 |
| 26014-060202 | 122 | 3 |
| | | 4 |
| 26014-080122 | 11 | 32 |
| 26014-080162 | 11 | 33 |
| | 16 | 25 |
| | 56 | 17 |
| | 115 | 13 |
| | 144 | 12 |
| 26014-080202 | 37 | 24 |
| | 84 | 25 |
| | | 26 |
| | 115 | 14 |

| Parts No. | Fig. No. | Ref. No. |
|---|---|---|
| 26014-080202 | 121 | 23 |
| | 144 | 13 |
| 26014-080252 | 7 | 11 -1 |
| | | 12 |
| | 101 | 18 |
| | 102 | 5 |
| 26014-100202 | 46 | 26 |
| | | 27 |
| | 47 | 14 |
| | 52 | 11 |
| | 55 | 18 |
| | 60 | 22 |
| | 69 | 43 |
| | 70 | 38 |
| | 95 | 31 |
| | 96 | 23 |
| | 102 | 8 |
| | 123 | 11 |
| 26014-100252 | 38 | 19 |
| | 46 | 28 |
| | | 29 |
| | | 30 |
| | | 31 |
| | 47 | 20 |
| | 51 | 2 |
| | | 4 |
| | 55 | 19 |
| | | 20 |
| | 56 | 18 |
| | 57 | 17 |
| | 59 | 4 |
| | | 10 |
| | 60 | 23 |
| | | 24 |
| | 62 | 7 |
| | 63 | 13 |
| | | 14 |
| | | 15 |
| | | 16 |
| | 65 | 11 |
| | | 12 |
| | 90 | 11 |
| | 94 | 9 |
| | 102 | 8 -1 |
| | 146 | 5 |
| 26014-100302 | 94 | 10 |
| 26014-100502 | 96 | 17 -1 |
| 26014-120402 | 96 | 20 -1 |
| 26014-120502 | 96 | 21 -1 |
| 26014-120702 | 96 | 22 -1 |

| Parts No. | Fig. No. | Ref. No. |
|---|---|---|
| 26022-050122 | 13 | 16 |
| 26023-050102 | 46 | 32 |
| | | 33 |
| 26051-080002 | 32 | 19 |
| | 33 | 33 |
| | 39 | 42 |
| 26076-100162 | 139 | 37 |
| | 140 | 31 |
| 26076-100252 | 68 | 52 |
| | 69 | 50 |
| | 70 | 44 |
| | 138 | 50 |
| | 139 | 48 |
| | 140 | 42 |
| 26076-100302 | 65 | 13 |
| 26076-100352 | 65 | 13 -1 |
| | 116 | 9 |
| 26076-120352 | 9 | 18 |
| 26076-120452 | 65 | 14 |
| 26076-160552 | 64 | 9 |
| | | 9 -1 |
| | 65 | 15 |
| 26106-080162 | 58 | 27 |
| | | 28 |
| 26106-080302 | 14 | 48 |
| | 32 | 26 |
| 26106-100122 | 40 | 3 |
| | 72 | 30 |
| | 142 | 25 |
| 26106-100162 | 48 | 6 |
| | | 7 |
| | | 8 |
| | | 9 |
| | | 10 |
| | 58 | 29 |
| 26106-100252 | 58 | 30 |
| 26106-100652 | 6 | 23 |
| 26116-050202 | 25 | 10 |
| 26116-080202 | 103 | 33 |
| 26116-080204 | 39 | 43 |
| 26116-080252 | 37 | 25 |
| | 121 | 24 |
| 26116-080254 | 33 | 34 |
| | 39 | 44 |
| 26116-080304 | 32 | 20 |
| 26116-080702 | 14 | 49 |
| 26116-100162 | 68 | 53 |
| | 69 | 51 |
| | 70 | 45 |
| | 138 | 51 |

| Parts No. | Fig. No. | Ref. No. |
|---|---|---|
| 26116-100162 | 139 | 49 |
| | 140 | 43 |
| 26116-100202 | 33 | 35 |
| | 39 | 45 |
| 26116-100752 | 107 | 16 |
| 26116-100802 | 103 | 34 |
| 26116-140352 | 84 | 43 |
| 26116-140652 | 29 | 13 |
| 26116-160352 | 59 | 5 |
| 26116-160502 | 42 | 6 |
| | 112 | 9 |
| 26206-141502 | 104 | 9 |
| 26347-100002 | 47 | 15 |
| | 60 | 25 |
| 26367-100002 | 13 | 37 |
| 26450-050102 | 78 | 12 |
| | 79 | 12 |
| | 80 | 14 |
| | | 32 |
| | 82 | 24 |
| | 126 | 12 |
| | 127 | 12 |
| | 128 | 29 |
| | 130 | 24 |
| 26450-050182 | 78 | 13 |
| | 79 | 13 |
| | 80 | 15 |
| | | 33 |
| | 82 | 25 |
| | 126 | 13 |
| | 127 | 13 |
| | 128 | 30 |
| | 130 | 25 |
| 26450-050302 | 77 | 26 |
| | 125 | 26 |
| 26450-050502 | 81 | 22 |
| | 129 | 22 |
| 26450-060302 | 100 | 33 |
| 26450-060652 | 77 | 27 |
| | 125 | 27 |
| 26450-120402 | 66 | 5 |
| 26476-050142 | 54 | 12 |
| 26557-050122 | 63 | 17 |
| 26559-050202 | 58 | 31 |
| 26587-040062 | 83 | 8 |
| | 121 | 28 |
| 26587-040122 | 32 | 21 |
| 26657-080002 | 56 | 19 |
| 26706-100002 | 6 | 24 |
| 26711-080002 | 67 | 33 |

# Parts No. Index


| Parts No. | Fig. No. | Ref. No. |
|---|---|---|
| 26716-060002 | 15 | 12 |
| | 16 | 23 |
| | 137 | 25 |
| 26716-080002 | 15 | 13 |
| | 32 | 22 |
| | 33 | 36 |
| | 39 | 46 |
| | 77 | 47 |
| | 125 | 47 |
| 26716-100002 | 84 | 27 |
| | 103 | 35 |
| | 107 | 17 |
| 26716-120002 | 9 | 19 |
| 26716-140002 | 29 | 14 |
| | 104 | 10 |
| 26756-060002 | 103 | 36 |
| 26756-080002 | 37 | 26 |
| | 39 | 47 |
| | 121 | 25 |
| 26756-140002 | 83 | 9 |
| 27260-520000 | 29 | 11 |
| 41800-210040 | 1 | 16 |
| | 117 | 16 |
| 41851-000110 | 71 | 29 |
| | | 31 |
| | 72 | 28 |
| | 85 | 11 |
| | 86 | 2 |
| | 88 | 2 |
| | | 7 |
| | | 14 |
| | | 16 |
| | 92 | 2 |
| | 93 | 2 |
| | | 4 |
| | | 12 |
| | 97 | 3 |
| | | 7 |
| | 101 | 8 |
| | 133 | 4 |
| | 136 | 2 |
| | | 7 |
| | | 9 |
| | 141 | 26 |
| 41851-000140 | 87 | 3 |
| | | 5 |
| | | 9 |
| | | 14 |
| | | 16 |
| | | 20 |

| Parts No. | Fig. No. | Ref. No. |
|---|---|---|
| 41851-000140 | 87 | 23 |
| | | 25 |
| | 92 | 4 |
| | 93 | 6 |
| | | 10 |
| | 95 | 10 |
| | | 12 |
| 41851-000180 | 85 | 3 |
| | 87 | 18 |
| | 93 | 13 |
| | 96 | 24 |
| 933110-54100 | 32 | 23 |
| | 33 | 37 |
| | 37 | 27 |
| | 39 | 48 |
| | 121 | 26 |
| 933111-20200 | 68 | 38 |
| | 69 | 44 |
| 933111-23600 | 27 | 22 |
| 933111-26600 | 68 | 30 |
| 933111-73800 | 28 | 8 |
| 933125-94500 | 69 | 34 |
| 933147-03400 | 68 | 54 |
| | 69 | 52 |
| | 70 | 46 |
| | 138 | 52 |
| | 139 | 50 |
| | 140 | 44 |
| 933147-08501 | 42 | 7 |
| | 112 | 10 |
| 933152-02710 | 84 | 28 |
| 933168-14170 | 68 | 55 |
| | 69 | 53 |
| | 70 | 47 |
| | 138 | 53 |
| | 139 | 51 |
| | 140 | 45 |
| 933171-13691 | 27 | 23 |
| | 134 | 9 |
| 933171-15801 | 16 | 24 |
| | 137 | 26 |
| 933171-18750 | 63 | 18 |
| 933171-29751 | 103 | 37 |
| | 107 | 18 |
| | 108 | 15 |

| Parts No. | Fig. No. | Ref. No. |
|---|---|---|

| Parts No. | Fig. No. | Ref. No. |
|---|---|---|

YANMAR

# PARTS CATALOG

0CB10-M80400EN

Last update Apr., 2013

## Precautions

1. Some of the illustrations in this parts catalog are simplified.

2. Depending on the specifications of your product, the actual product and parts catalog may not match.

3. Please use genuine parts when repairing the product.

4. When ordering spare parts, please confirm the specifications (model name, serial number, part number, quantity, etc.) and confirm with your distributors or dealers.

5. Please refer to the user manual or service manual for information on how to replace parts, technical information, and other related details.

6. If you are using a booklet or PDF parts catalog, you must verify the latest information via the online parts catalog.

## Disclaimer

1. Our company will not assume any responsibility for the matters stipulated in each of the following items.

   1) The contents provided in this parts catalog may not correspond with the latest products due to changes in regulations, product specifications, or other amendments.

   2) The illustrations of the products listed in this parts catalog (including 3D images) are for image purposes only and may differ from the actual product and specifications.

   3) This parts catalog does not guarantee conformity to the customer's requirements.

   4) In addition to the previous items, we do not guarantee the accuracy, completeness, assurance, applicability, usefulness, availability, safety or reliability of this parts catalog.

2. Our company assumes no responsibility whatsoever for any damage or disadvantage suffered by customers or others due to the addition, modification, suspension, cancellation, or discontinuation, etc., of the contents of this parts catalog. ("Damages" includes, but is not limited to, loss of opportunities for use of this parts catalog, as well as consequential damages, indirect damages, special damages, future damages and any loss of profits or any other disadvantages or damages.)

3. Customers are requested to use this parts catalog at their own risk. Our company assumes no responsibility whatsoever for any damages incurred by customers or other companies as a result of using or not using this parts catalog.

4. When using this parts catalog, you must comply with the laws and regulations applicable in the country or region in which you use it. Our company assumes no responsibility for any violations of laws and regulations by the customer.

# Contents




Fig. No. Fig. Name

ENGINE

1. CYLINDER BLOCK
2. GEAR HOUSING
3. FLYWHEEL HOUSING & OIL SUMP
4. CYLINDER HEAD & BONNET
5. SUCTION MANIFOLD
6. EXHAUST MANIFOLD & SILENCER
7. CAMSHAFT & DRIVING GEAR
8. CRANKSHAFT & PISTON
9. LUB. OIL SYSTEM
10. COOLING WATER SYSTEM
11. FUEL INJECTION PUMP
12. GOVERNOR
13. FUEL INJECTION VALVE
14. STARTER MOTOR
15. GENERATOR
16. ELECTRONIC CONTROL UNIT(ECU)
17. GASKET SET

Fig. No. Fig. Name

# Fig.1. CYLINDER BLOCK



(A)=3TNV88-ZSBV (D)=
(B)= (E)=
(C)= (F)=

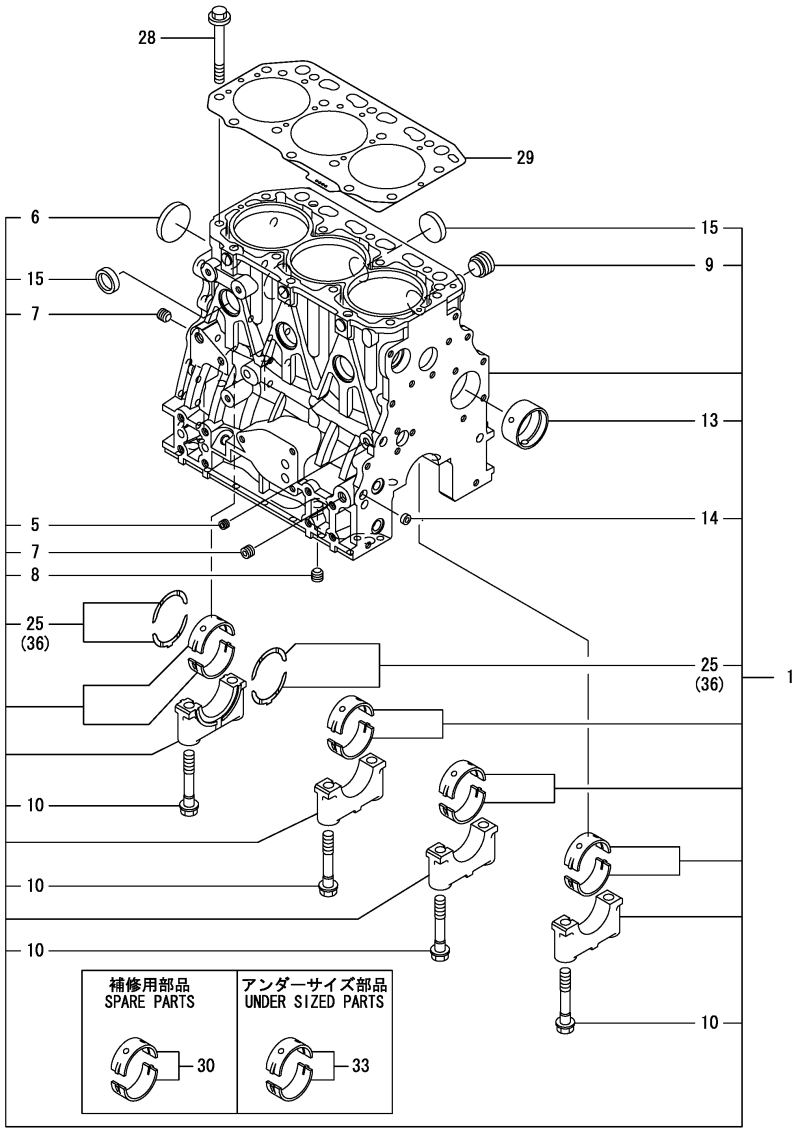


| No. | Lev. | Parts No. | Description | Q'ty (A) | (B) | (C) | (D) | (E) | (F) | I | R |
|---|---|---|---|---|---|---|---|---|---|---|---|
| 1 | 1 | 729005-01560 | BLOCK ASSY, CYLINDER | 1 | | | | | | | |
| 5 | 2 | 124060-01050 | PLUG, PT1/8 | 1 | | | | | | | |
| 6 | 2 | 129001-01250 | PLUG, DISH TYPE 50 | 1 | | | | | | | |
| 7 | 2 | 124160-01910 | PLUG, PT1/4 | 2 | | | | | | | |
| 8 | 2 | 124160-01910 | PLUG, PT1/4 | 1 | | | | | | | |
| 9 | 2 | 171051-01921 | PLUG, NPTF1 | 1 | | | | | | | |
| 10 | 2 | 129150-02020 | BOLT, METAL CAP | 8 | | | | | | | |
| 13 | 2 | 129795-02412 | BUSH, CAMSHAFT | 1 | | | | | | | |
| 14 | 2 | 27241-120000 | PLUG, 12 | 2 | | | | | | | |
| 15 | 2 | 27241-300000 | PLUG 30 | 6 | | | | | | | |
| 25 | 2 | 129150-02931 | BEARING ASSY, THRUST | 2 | | | | | | | |
| 28 | 1 | 129150-01200 | BOLT, CYLINDER HEAD | 14 | | | | | | | |
| 29 | 1 | 129001-01340 | GASKET, HEAD | 1 | | | | | | | |
| 30 | 1 | 129001-02931 | BEARING ASSY, MAIN | 4 | | | | | | | 1 |
| 33 | 1 | 129150-02871 | BEARING ASSY, MAIN | 4 | | | | | | | 2 |
| 36 | 1 | 129150-02941 | BEARING, THRUST 0.25 | 1 | | | | | | | 3 |

Remarks
(1)Spare parts.
(2)Under-sized(U.S.=0.25) parts.
(3)Over-sized(O.S.=0.25) parts.

N:Old $\overset{\text{Yes}}{\underset{\text{No}}{\rightleftarrows}}$ New, Q:Old $\overset{\text{No}}{\underset{\text{Yes}}{\rightleftarrows}}$ New, R:Old $\overset{\text{Yes}}{\underset{\text{Yes}}{\rightleftarrows}}$ New, S:Old $\overset{\text{No}}{\underset{\text{No}}{\rightleftarrows}}$ New, W:Add, Z:Discontinued, F:Interchangeable by set, K:Q'ty Change

Copyright (C) YANMAR GLOBAL CS CO., LTD. All RightsReserved.

# Fig.2. GEAR HOUSING



(A)=3TNV88-ZSBV (D)=
(B)= (E)=
(C)= (F)=

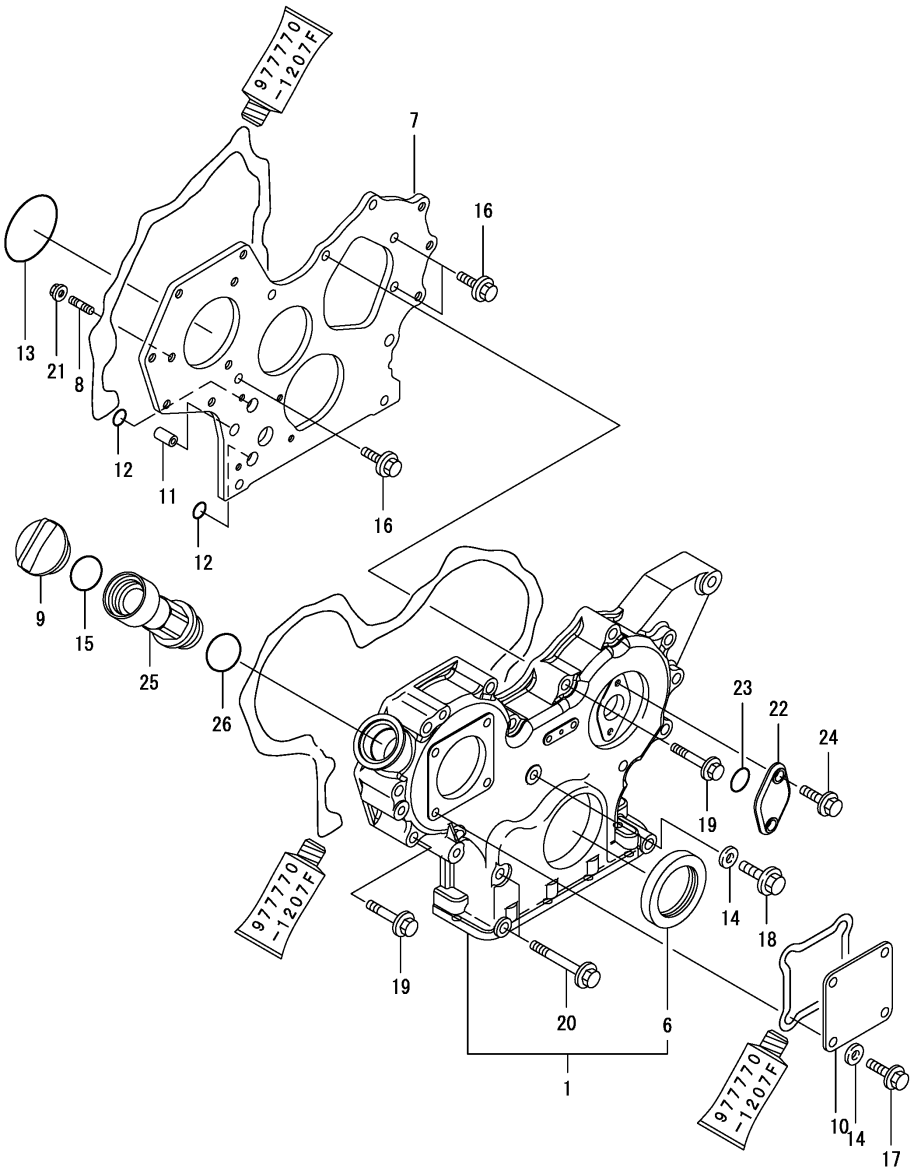


| No. | Lev. | Parts No. | Description | Q'ty (A) | (B) | (C) | (D) | (E) | (F) | I | R |
|---|---|---|---|---|---|---|---|---|---|---|---|
| 1 | 1 | 729630-01500 | CASE ASSY, GEAR | 1 | | | | | | | |
| 6 | 2 | 119934-01800 | SEAL, OIL | 1 | | | | | | | |
| 7 | 1 | 119803-01520 | FLANGE, GEAR CASE | 1 | | | | | | | |
| 8 | 1 | 119802-01561 | BOLT, STUD M8X25 | 3 | | | | | | | |
| 9 | 1 | 124160-01751 | CAP, FILLER | 1 | | | | | | | |
| 10 | 1 | 124240-01871 | COVER, PUMP | 1 | | | | | | | |
| 11 | 1 | 129795-01950 | PIPE, DOWEL L=18 | 2 | | | | | | | |
| 12 | 1 | 119609-32040 | O-RING, P16 | 2 | | | | | | | |
| 13 | 1 | 121850-51960 | O-RING | 1 | | | | | | | |
| 14 | 1 | 22190-080002 | WASHER, SEAL 6 | 5 | | | | | | | |
| 15 | 1 | 24311-000320 | O-RING, 1AP32.0 | 1 | | | | | | | |
| 16 | 1 | 26106-080162 | BOLT, M8X 16 PLATED | 3 | | | | | | | |
| 17 | 1 | 26106-080162 | BOLT, M8X 16 PLATED | 4 | | | | | | | |
| 18 | 1 | 26106-080302 | BOLT, M8X 30 PLATED | 1 | | | | | | | |
| 19 | 1 | 26106-080552 | BOLT, M8X 55 PLATED | 12 | | | | | | | |
| 20 | 1 | 26106-080852 | BOLT, M8X 85 PLATED | 3 | | | | | | | |
| 21 | 1 | 26306-080002 | NUT, M8 | 3 | | | | | | | |
| 22 | 1 | 121023-01551 | COVER | 1 | | | | | | | |
| 23 | 1 | 24341-000240 | O-RING, 1AS24.0 | 1 | | | | | | | |
| 24 | 1 | 26106-060162 | BOLT, M6X 16 PLATED | 2 | | | | | | | |
| 25 | 1 | 171031-11741 | PIPE | 1 | | | | | | | |
| 26 | 1 | 24311-000320 | O-RING, 1AP32.0 | 1 | | | | | | | |

N:Old $\overset{\text{Yes}}{\underset{\text{No}}{\rightleftarrows}}$ New, Q:Old $\overset{\text{No}}{\underset{\text{Yes}}{\rightleftarrows}}$ New, R:Old $\overset{\text{Yes}}{\underset{\text{Yes}}{\rightleftarrows}}$ New, S:Old $\overset{\text{No}}{\underset{\text{No}}{\rightleftarrows}}$ New, W:Add, Z:Discontinued, F:Interchangeable by set, K:Q'ty Change

Copyright (C) YANMAR GLOBAL CS CO., LTD. All RightsReserved.

# Fig.3. FLYWHEEL HOUSING & OIL SUMP

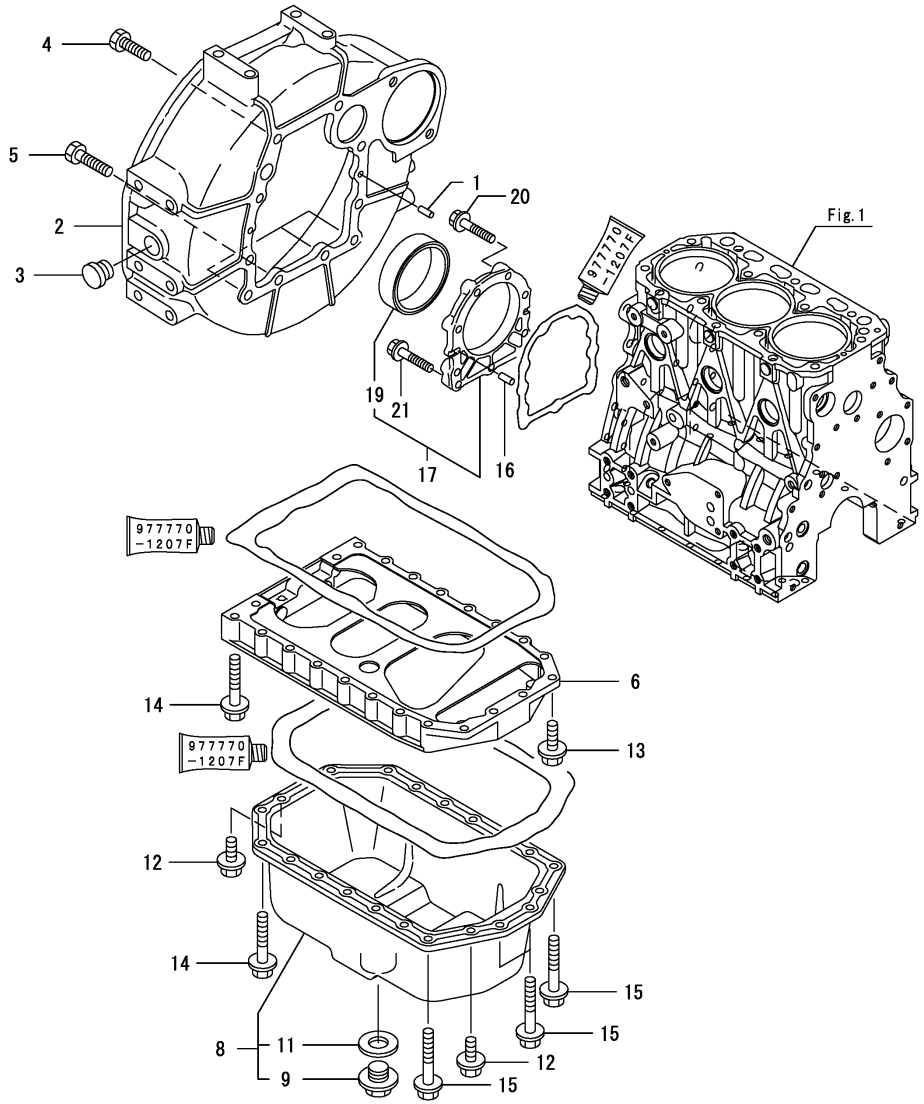


(A)=3TNV88-ZSBV (D)=
(B)= (E)=
(C)= (F)=

| No. | Lev. | Parts No. | Description | Q'ty (A) | (B) | (C) | (D) | (E) | (F) | I | R |
|---|---|---|---|---|---|---|---|---|---|---|---|
| 1 | 1 | 129100-01580 | PIN, PARALLEL 8X16 | 2 | | | | | | | |
| 2 | 1 | 129612-01600 | HOUSING, FLYWHEEL | 1 | | | | | | | |
| 3 | 1 | 119620-01750 | CAP | 1 | | | | | | | |
| 4 | 1 | 26206-100252 | BOLT, M10X 25 PLATED | 6 | | | | | | | |
| 5 | 1 | 26206-100302 | BOLT, M10X 30 PLATED | 4 | | | | | | | |
| 6 | 1 | 129100-01730 | SPACER, OIL-PAN | 1 | | | | | | | |
| 8 | 1 | 129136-01780 | OIL PAN ASSY | 1 | | | | | | | |
| 9 | 2 | 119640-01640 | PLUG, DRAIN M22 | 1 | | | | | | | |
| 11 | 2 | 22190-220002 | WASHER, SEAL 22 | 1 | | | | | | | |
| 12 | 1 | 26106-080162 | BOLT, M8X 16 PLATED | 4 | | | | | | | |
| 13 | 1 | 26106-080252 | BOLT, M8X 25 PLATED | 2 | | | | | | | |
| 14 | 1 | 26106-080452 | BOLT, M8X 45 PLATED | 16 | | | | | | | |
| 15 | 1 | 26106-080502 | BOLT, M8X 50 PLATED | 4 | | | | | | | |
| 16 | 1 | 129100-01580 | PIN, PARALLEL 8X16 | 2 | | | | | | | |
| 17 | 1 | 129100-01640 | CASE ASSY, OIL SEAL | 1 | | | | | | | |
| 19 | 2 | 129795-01780 | SEAL, OIL | 1 | | | | | | | |
| 20 | 1 | 129486-01670 | BOLT, M8X30 | 6 | | | | | | | |
| 21 | 1 | 26106-080352 | BOLT, M8X 35 PLATED | 3 | | | | | | | |

N:Old $\overset{\text{Yes}}{\underset{\text{No}}{\rightleftarrows}}$ New, Q:Old $\overset{\text{No}}{\underset{\text{Yes}}{\rightleftarrows}}$ New, R:Old $\overset{\text{Yes}}{\underset{\text{Yes}}{\rightleftarrows}}$ New, S:Old $\overset{\text{No}}{\underset{\text{No}}{\rightleftarrows}}$ New, W:Add, Z:Discontinued, F:Interchangeable by set, K:Q'ty Change

Copyright (C) YANMAR GLOBAL CS CO., LTD. All RightsReserved.

# Fig.4. CYLINDER HEAD & BONNET

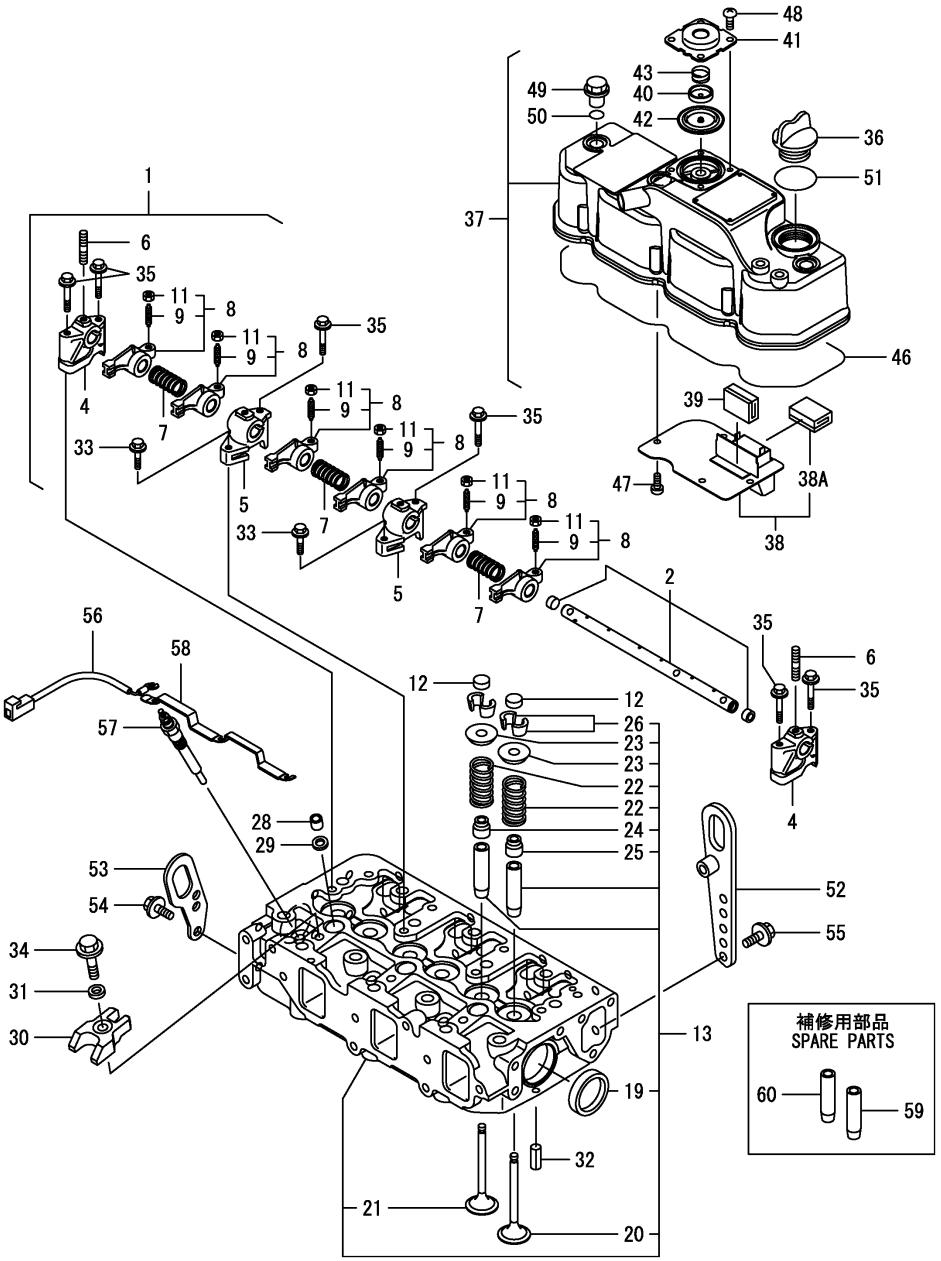


(A)=3TNV88-ZSBV
(B)=
(C)=
(D)=
(E)=
(F)=

| No. | Lev. | Parts No. | Description | Q'ty (A) | (B) | (C) | (D) | (E) | (F) | I | R |
|---|---|---|---|---|---|---|---|---|---|---|---|
| 1 | 1 | 129004-11241 | SHAFT ASSY, ROCKER | 1 | | | | | | | |
| 2 | 2 | 129004-11251 | SHAFT, ROCKER ARM | 1 | | | | | | | |
| 4 | 2 | 119802-11260 | SUPPORT, ROCKER ARM | 2 | | | | | | | |
| 5 | 2 | 119802-11270 | SUPPORT, ROCKER ARM | 2 | | | | | | | |
| 6 | 2 | 26226-080182 | STUD, M8X 18 | 3 | | | | | | | |
| 7 | 2 | 129150-11280 | SPRING, SHAFT | 3 | | | | | | | |
| 8 | 2 | 129004-11650 | ARM ASSY, ROCKER | 6 | | | | | | | |
| 9 | 3 | 129150-11230 | SCREW, VALVE ADJUST | 6 | | | | | | | |
| 11 | 3 | 129150-11750 | NUT, M8XP1.0 | 6 | | | | | | | |
| 12 | 1 | 129150-11370 | CAP, VALVE | 6 | | | | | | | |
| 13 | 1 | 129008-11700 | HEAD ASSY, CYLINDER | 1 | | | | | | | |
| 19 | 2 | 27241-400000 | PLUG, 40 | 2 | | | | | | | |
| 20 | 2 | 129005-11100 | VALVE, INTAKE | 3 | | | | | | | |
| 21 | 2 | 129100-11112 | VALVE, EXHAUST | 3 | | | | | | | |
| 22 | 2 | 129795-11120 | SPRING, VALVE | 6 | | | | | | | |
| 23 | 2 | 129795-11180 | RETAINER, SPRING | 6 | | | | | | | |
| 24 | 2 | 121400-11340 | SEAL, VALVE STEM | 3 | | | | | | | |
| 25 | 2 | 124460-11340 | SEAL, VALVE STEM | 3 | | | | | | | |
| 26 | 2 | 27310-080001 | COTTER, 8 | 6 | | | | | | | |
| 28 | 1 | 119802-11870 | PROTECTOR, NOZZLE | 3 | | | | | | | |
| 29 | 1 | 119625-11880 | SEAT, NOZZLE | 3 | | | | | | | |
| 30 | 1 | 129004-11900 | RETAINER, NOZZLE | 3 | | | | | | | |
| 31 | 1 | 120270-54410 | WASHER, INJECTOR | 3 | | | | | | | |
| 32 | 1 | 22351-060012 | PIN, SPRING 6.0X12 | 2 | | | | | | | |
| 33 | 1 | 26106-080252 | BOLT, M8X 25 PLATED | 2 | | | | | | | |
| 34 | 1 | 26106-080352 | BOLT, M8X 35 PLATED | 3 | | | | | | | |
| 35 | 1 | 26106-080502 | BOLT, M8X 50 PLATED | 6 | | | | | | | |
| 36 | 1 | 124160-01751 | CAP, FILLER | 1 | | | | | | | |
| 37 | 1 | 129004-11350 | BONNET ASSY, HEAD | 1 | | | | | | | |
| 38 | 2 | 129004-03010 | PLATE, BAFFLE | 1 | | | | | | | |
| 38A | 3 | 119802-03070 | BAFFLE, BREATHER | 1 | | | | | | | |
| 39 | 2 | 129150-03070 | BAFFLE, BREATHER | 1 | | | | | | | |
| 40 | 2 | 119802-03110 | PLATE, DIAPHRAGM | 1 | | | | | | | |
| 41 | 2 | 119802-03121 | COVER, DIAPHRAGM | 1 | | | | | | | |
| 42 | 2 | 119802-03130 | DIAPHRAGM, BREATHER | 1 | | | | | | | |
| 43 | 2 | 119802-03141 | SPRING, DIAPHRAGM | 1 | | | | | | | |
| 46 | 2 | 129004-11310 | GASKET, BONNET | 1 | | | | | | | |
| 47 | 2 | 22857-500100 | SCREW, 5X10 | 4 | | | | | | | |
| 48 | 2 | 22857-500100 | SCREW, 5X10 | 4 | | | | | | | |
| 49 | 1 | 124160-11360 | KNOB, BONNET | 3 | | | | | | | |
| 50 | 1 | 24311-000120 | O-RING, 1AP12.0 | 3 | | | | | | | |
| 51 | 1 | 24311-000320 | O-RING, 1AP32.0 | 1 | | | | | | | |
| 52 | 1 | 129648-07900 | LIFTER, ENGINE | 1 | | | | | | | |
| 53 | 1 | 119626-07900 | LIFTER, ENGINE | 1 | | | | | | | |
| 54 | 1 | 26106-080142 | BOLT, M8X 14 PLATED | 2 | | | | | | | |
| 55 | 1 | 26106-080162 | BOLT, M8X 16 PLATED | 2 | | | | | | | |
| 56 | 1 | 119803-77830 | HARNESS, WIRE | 1 | | | | | | | |
| 57 | 1 | 129008-77800 | PLUG, GLOW | 3 | | | | | | | |
| 58 | 1 | 129008-77820 | CONNECTOR, GLOW PLUG | 1 | | | | | | | |
| 59 | 1 | 120130-11860 | GUIDE, VALVE | 3 | | | | | | | 1 |
| 60 | 1 | 129150-11810 | GUIDE, VALVE | 3 | | | | | | | 1 |

N:Old $\overset{\text{Yes}}{\underset{\text{No}}{\leftrightarrows}}$ New, Q:Old $\overset{\text{No}}{\underset{\text{Yes}}{\leftrightarrows}}$ New, R:Old $\overset{\text{Yes}}{\underset{\text{Yes}}{\leftrightarrows}}$ New, S:Old $\overset{\text{No}}{\underset{\text{No}}{\leftrightarrows}}$ New, W:Add, Z:Discontinued, F:Interchangeable by set, K:Q'ty Change

Remarks
(1)Spare parts.

Copyright (C) YANMAR GLOBAL CS CO., LTD. All RightsReserved.

# Fig.5. SUCTION MANIFOLD



(A)=3TNV88-ZSBV (D)=
(B)= (E)=
(C)= (F)=

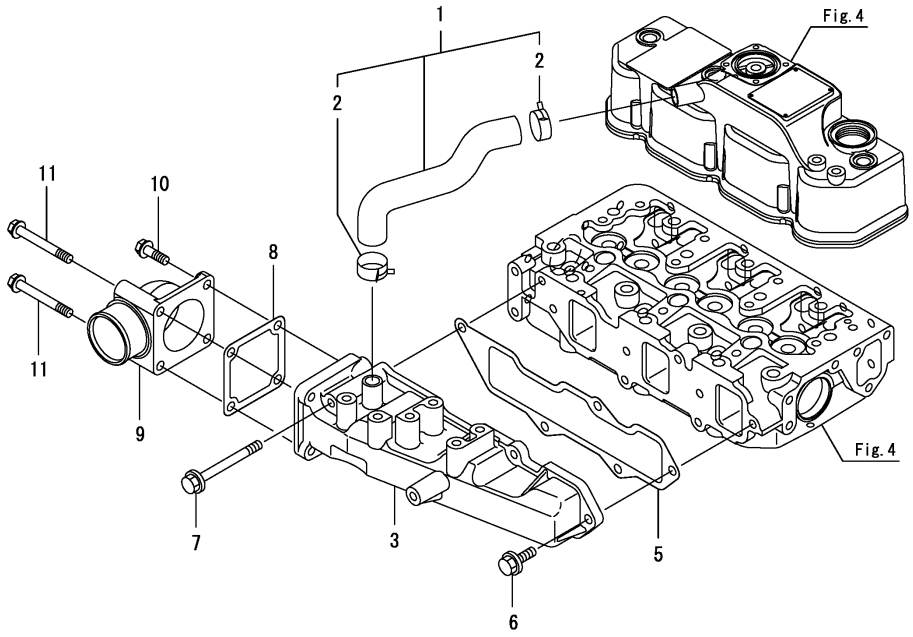


| No. | Lev. | Parts No. | Description | Q'ty (A) | (B) | (C) | (D) | (E) | (F) | I | R |
|---|---|---|---|---|---|---|---|---|---|---|---|
| 1 | 1 | 129004-03080 | HOSE ASSY, BREATHER | 1 | | | | | | | |
| 2 | 2 | 129410-03990 | CLAMP, HOSE 21.5 | 2 | | | | | | | |
| 3 | 1 | 129004-12101 | MANIFOLD, AIR INTAKE | 1 | | | | | | | |
| 5 | 1 | 129001-12110 | GASKET, MANIFOLD | 1 | | | | | | | |
| 6 | 1 | 26106-080202 | BOLT, M8X 20 PLATED | 4 | | | | | | | |
| 7 | 1 | 26106-080802 | BOLT, M8X 80 PLATED | 1 | | | | | | | |
| 8 | 1 | 129150-77511 | GASKET, AIR HEATER | 1 | | | | | | | |
| 9 | 1 | 171340-77520 | BEND, AIR HEATER | 1 | | | | | | | |
| 10 | 1 | 26106-080252 | BOLT, M8X 25 PLATED | 2 | | | | | | | |
| 11 | 1 | 26106-080652 | BOLT, M8X 65 PLATED | 2 | | | | | | | |

N:Old $\overset{\text{Yes}}{\underset{\text{No}}{\leftrightarrows}}$ New, Q:Old $\overset{\text{No}}{\underset{\text{Yes}}{\leftrightarrows}}$ New, R:Old $\overset{\text{Yes}}{\underset{\text{Yes}}{\leftrightarrows}}$ New, S:Old $\overset{\text{No}}{\underset{\text{No}}{\leftrightarrows}}$ New, W:Add, Z:Discontinued, F:Interchangeable by set, K:Q'ty Change

Copyright (C) YANMAR GLOBAL CS CO., LTD. All RightsReserved.

# Fig.6. EXHAUST MANIFOLD & SILENCER

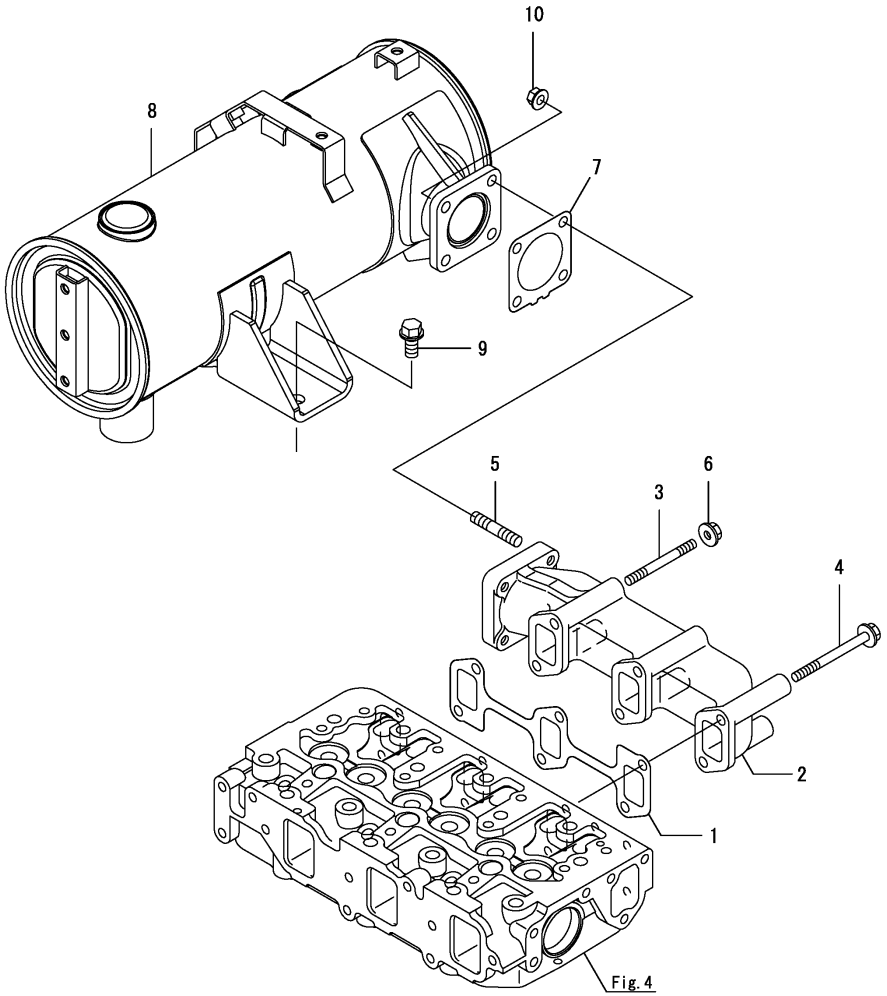


(A)=3TNV88-ZSBV (D)=
(B)= (E)=
(C)= (F)=

| No. | Lev. | Parts No. | Description | Q'ty (A) | (B) | (C) | (D) | (E) | (F) | I | R |
|---|---|---|---|---|---|---|---|---|---|---|---|
| 1 | 1 | 129150-13110 | GASKET, EXH.MANIFOLD | 1 | | | | | | | |
| 2 | 1 | 129004-13129 | MANIFOLD, EXHAUST | 1 | | | | | | | |
| 3 | 1 | 123900-13610 | BOLT, STUD M8X80 | 2 | | | | | | | |
| 4 | 1 | 123900-13630 | BOLT, M8X80 | 4 | | | | | | | |
| 5 | 1 | 119131-18320 | BOLT, STUD M8X22 | 4 | | | | | | | |
| 6 | 1 | 26306-080002 | NUT, M8 | 2 | | | | | | | |
| 7 | 1 | 129004-13200 | GASKET, SILENCER | 1 | | | | | | | |
| 8 | 1 | 129237-13500 | SILENCER | 1 | | | | | | | |
| 9 | 1 | 26106-100202 | BOLT, M10X 20 PLATED | 2 | | | | | | | |
| 10 | 1 | 26306-080002 | NUT, M8 | 4 | | | | | | | |

N:Old $\overset{\text{Yes}}{\underset{\text{No}}{\leftrightarrows}}$ New, Q:Old $\overset{\text{No}}{\underset{\text{Yes}}{\leftrightarrows}}$ New, R:Old $\overset{\text{Yes}}{\underset{\text{Yes}}{\leftrightarrows}}$ New, S:Old $\overset{\text{No}}{\underset{\text{No}}{\leftrightarrows}}$ New, W:Add, Z:Discontinued, F:Interchangeable by set, K:Q'ty Change

Copyright (C) YANMAR GLOBAL CS CO., LTD. All RightsReserved.

# Fig.7. CAMSHAFT & DRIVING GEAR



(A)=3TNV88-ZSBV
(B)=
(C)=
(D)=
(E)=
(F)=

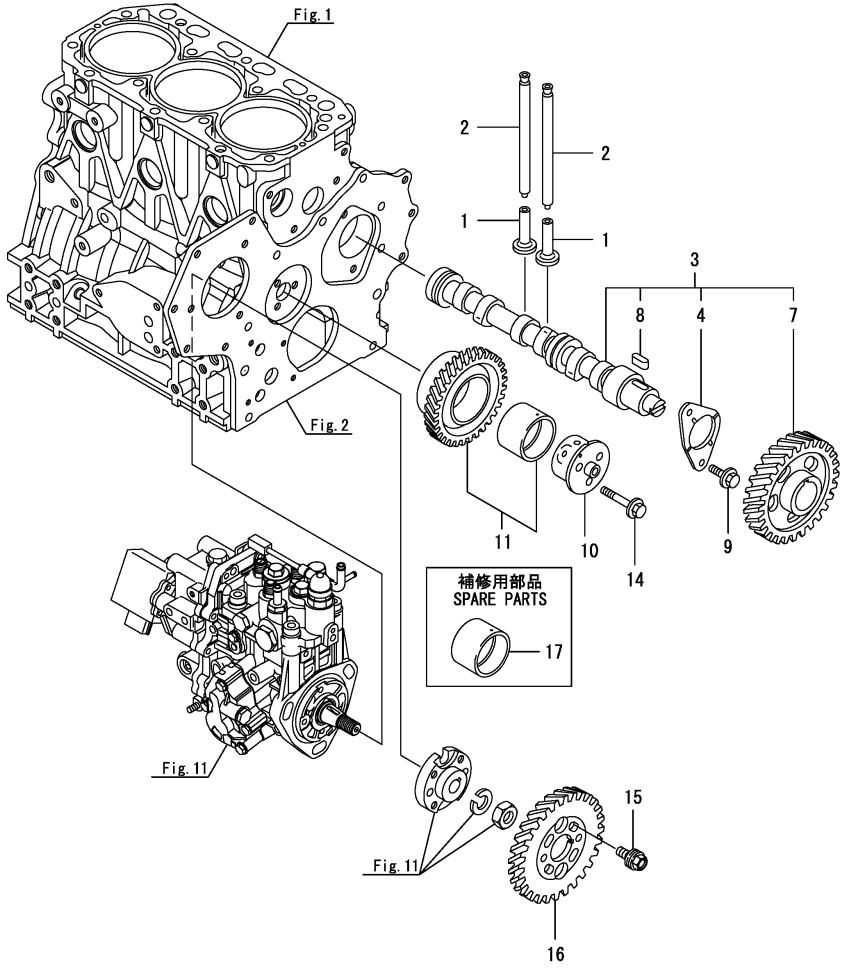


| No. | Lev. | Parts No. | Description | Q'ty (A) | (B) | (C) | (D) | (E) | (F) | I | R |
|---|---|---|---|---|---|---|---|---|---|---|---|
| 1 | 1 | 129150-14200 | TAPPET | 6 | | | | | | | |
| 2 | 1 | 129150-14400 | PUSH-ROD, L=178 | 6 | | | | | | | |
| 3 | 1 | 129129-14580 | CAMSHAFT ASSY | 1 | | | | | | | |
| 4 | 2 | 129150-02450 | BEARING, THRUST | 1 | | | | | | | |
| 7 | 2 | 129150-14101 | GEAR, CAMSHAFT | 1 | | | | | | | |
| 8 | 2 | 22512-070140 | KEY, 7X 14 | 1 | | | | | | | |
| 9 | 1 | 26106-080142 | BOLT, M8X 14 PLATED | 2 | | | | | | | |
| 10 | 1 | 119803-25050 | SHAFT, IDLE | 1 | | | | | | | |
| 11 | 1 | 119802-25101 | GEAR ASSY, IDLE | 1 | | | | | | | |
| 14 | 1 | 26106-080402 | BOLT, M8X 40 PLATED | 3 | | | | | | | |
| 15 | 1 | 129150-25301 | BOLT | 4 | | | | | | | |
| 16 | 1 | 119802-25901 | GEAR, PUMP | 1 | | | | | | | |
| 17 | 1 | 119802-25071 | BUSH, IDLE GEAR | 1 | | | | | | | 1 |

Remarks
(1)Spare parts.

N:Old $\overset{\text{Yes}}{\underset{\text{No}}{\rightleftarrows}}$ New, Q:Old $\overset{\text{No}}{\underset{\text{Yes}}{\rightleftarrows}}$ New, R:Old $\overset{\text{Yes}}{\underset{\text{Yes}}{\rightleftarrows}}$ New, S:Old $\overset{\text{No}}{\underset{\text{No}}{\rightleftarrows}}$ New, W:Add, Z:Discontinued, F:Interchangeable by set, K:Q'ty Change

Copyright (C) YANMAR GLOBAL CS CO., LTD. All RightsReserved.

# Fig.8. CRANKSHAFT & PISTON



(A)=3TNV88-ZSBV
(B)=
(C)=
(D)=
(E)=
(F)=

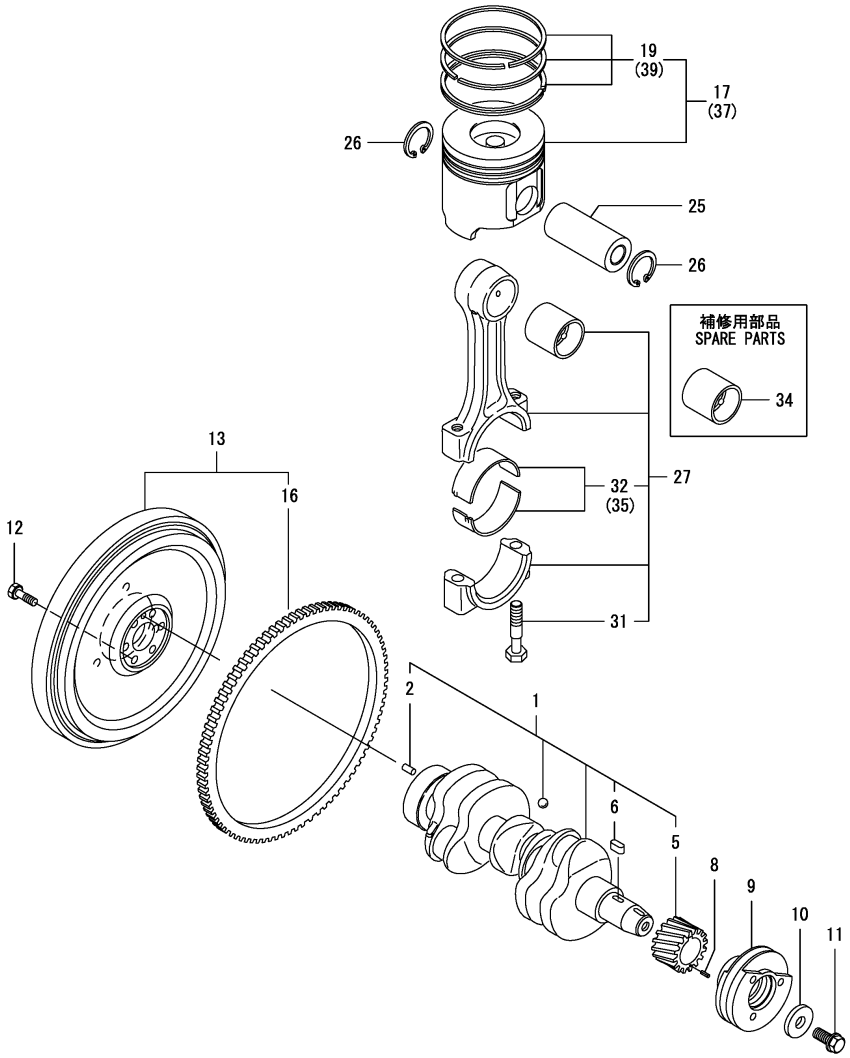


| No. | Lev. | Parts No. | Description | Q'ty (A) | (B) | (C) | (D) | (E) | (F) | I | R |
|---|---|---|---|---|---|---|---|---|---|---|---|
| 1 | 1 | 129008-21000 | CRANKSHAFT ASSY | 1 | | | | | | | |
| 2 | 2 | 129100-01580 | PIN, PARALLEL 8X16 | 1 | | | | | | | |
| 5 | 2 | 119803-21200 | GEAR, CRANKSHAFT | 1 | | | | | | | |
| 6 | 2 | 22512-070140 | KEY, 7X 14 | 1 | | | | | | | |
| 8 | 1 | 22351-030010 | PIN, SPRING 3.0X10 | 1 | | | | | | | |
| 9 | 1 | 129004-21650 | V-PULLEY, CRANK 110 | 1 | | | | | | | |
| 10 | 1 | 129795-21661 | WASHER | 1 | | | | | | | |
| 11 | 1 | 121850-21680 | BOLT | 1 | | | | | | | |
| 12 | 1 | 121111-21501 | BOLT, FLYWHEEL | 6 | | | | | | | |
| 13 | 1 | 129128-21590 | FLYWHEEL ASSY | 1 | | | | | | | |
| 16 | 2 | 119865-21600 | GEAR, RING Z=116 | 1 | | | | | | | |
| 17 | 1 | 129005-22080 | PISTON ASSY | 3 | | | | | | | |
| 19 | 2 | 129005-22500 | RING SET, PISTON | 3 | | | | | | | |
| 25 | 1 | 129202-22300 | PIN, PISTON D26 L70 | 3 | | | | | | | |
| 26 | 1 | 22252-000260 | RING, 26 | 6 | | | | | | | |
| 27 | 1 | 729402-23100 | ROD ASSY, CONNECTING | 3 | | | | | | | |
| 31 | 2 | 121550-23200 | BOLT, CONNECTING ROD | 6 | | | | | | | |
| 32 | 2 | 129150-23601 | BEARING, CRANK PIN | 3 | | | | | | | |
| 34 | 1 | 129100-23910 | BEARING, PISTON PIN | 3 | | | | | | | 1 |
| 35 | 1 | 129150-23611 | BEARING, 0.25 US | 3 | | | | | | | 2 |
| 37 | 1 | 129005-22900 | PISTON ASSY, 0.25 OS | 3 | | | | | | | 3 |
| 39 | 2 | 129005-22950 | RING SET, 0.25 OS | 3 | | | | | | | 3 |

Remarks
(1)Spare parts.
(2)Under-sized(U.S.=0.25) parts.
(3)Over-sized(O.S.=0.25) parts.

N:Old $\overset{\text{Yes}}{\underset{\text{No}}{\leftrightarrows}}$ New, Q:Old $\overset{\text{No}}{\underset{\text{Yes}}{\leftrightarrows}}$ New, R:Old $\overset{\text{Yes}}{\underset{\text{Yes}}{\leftrightarrows}}$ New, S:Old $\overset{\text{No}}{\underset{\text{No}}{\leftrightarrows}}$ New, W:Add, Z:Discontinued, F:Interchangeable by set, K:Q'ty Change

Copyright (C) YANMAR GLOBAL CS CO., LTD. All RightsReserved.

# Fig.9. LUB. OIL SYSTEM



(A)=3TNV88-ZSBV
(B)=
(C)=
(D)=
(E)=
(F)=

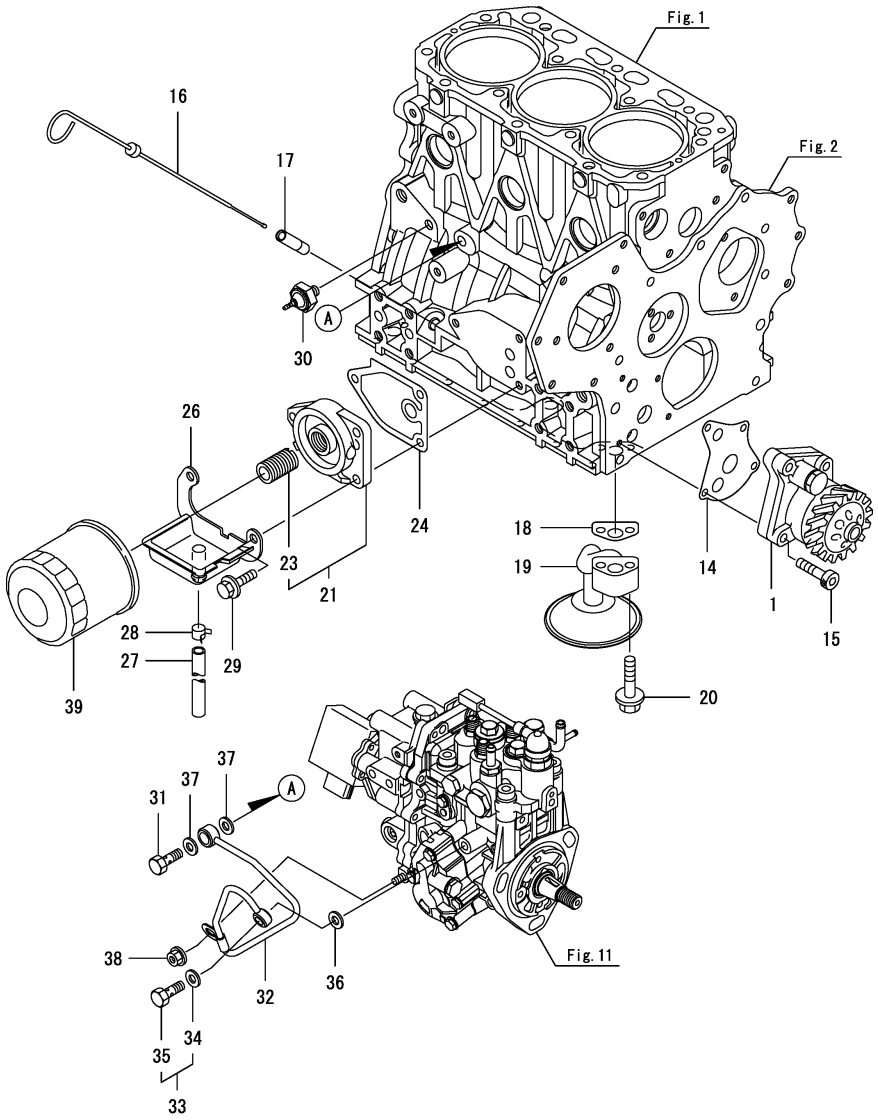


| No. | Lev. | Parts No. | Description | Q'ty (A) | (B) | (C) | (D) | (E) | (F) | I | R |
|---|---|---|---|---|---|---|---|---|---|---|---|
| 1 | 1 | 129001-32001 | PUMP ASSY, OIL | 1 | | | | | | | |
| 14 | 1 | 129150-32020 | GASKET, PUMP | 1 | | | | | | | |
| 15 | 1 | 26450-060252 | BOLT, M6X 25 | 4 | | | | | | | |
| 16 | 1 | 129004-34802 | DIPSTICK | 1 | | | | | | | |
| 17 | 1 | 121520-34810 | GUIDE, DIPSTICK | 1 | | | | | | | |
| 18 | 1 | 129150-35042 | GASKET | 1 | | | | | | | |
| 19 | 1 | 129100-35301 | PIPE ASSY, OIL INLET | 1 | | | | | | | |
| 20 | 1 | 26106-080352 | BOLT, M8X 35 PLATED | 2 | | | | | | | |
| 21 | 1 | 119802-35100 | BRACKET ASSY, FILTER | 1 | | | | | | | |
| 23 | 2 | 129100-35140 | BOLT, STUD | 1 | | | | | | | |
| 24 | 1 | 129150-35111 | GASKET | 1 | | | | | | | |
| 26 | 1 | 129240-35800 | SUMP, OIL | 1 | | | | | | | |
| 27 | 1 | 23065-120230 | PIPE, 12X 230 | 1 | | | | | | | |
| 28 | 1 | 23080-014000 | CLAMP, 14 | 1 | | | | | | | |
| 29 | 1 | 26106-080202 | BOLT, M8X 20 PLATED | 3 | | | | | | | |
| 30 | 1 | 114250-39450 | SWITCH, HYDRAULIC | 1 | | | | | | | |
| 31 | 1 | 124160-39140 | BOLT, PIPE JOINT M10 | 1 | | | | | | | |
| 32 | 1 | 119802-39450 | PIPE ASSY, OIL | 1 | | | | | | | |
| 33 | 1 | 129005-59830 | BOLT ASSY, JOINT M8 | 1 | | | | | | | |
| 34 | 2 | 22190-080002 | WASHER, SEAL 6 | 1 | | | | | | | |
| 35 | 2 | 23857-030000 | BOLT, JOINT 3 | 1 | | | | | | | |
| 36 | 1 | 22190-080002 | WASHER, SEAL 6 | 1 | | | | | | | |
| 37 | 1 | 22190-100002 | WASHER, SEAL 10 | 2 | | | | | | | |
| 38 | 1 | 26366-060002 | NUT, M6 | 1 | | | | | | | |
| 39 | 1 | 129150-35170 | FILTER,LO | 1 | | | | | | | |

Remarks
(1)Spare parts.

N:Old $\overset{\text{Yes}}{\underset{\text{No}}{\leftrightarrows}}$ New, Q:Old $\overset{\text{No}}{\underset{\text{Yes}}{\leftrightarrows}}$ New, R:Old $\overset{\text{Yes}}{\underset{\text{Yes}}{\leftrightarrows}}$ New, S:Old $\overset{\text{No}}{\underset{\text{No}}{\leftrightarrows}}$ New, W:Add, Z:Discontinued, F:Interchangeable by set, K:Q'ty Change

Copyright (C) YANMAR GLOBAL CS CO., LTD. All RightsReserved.

# Fig.10. COOLING WATER SYSTEM

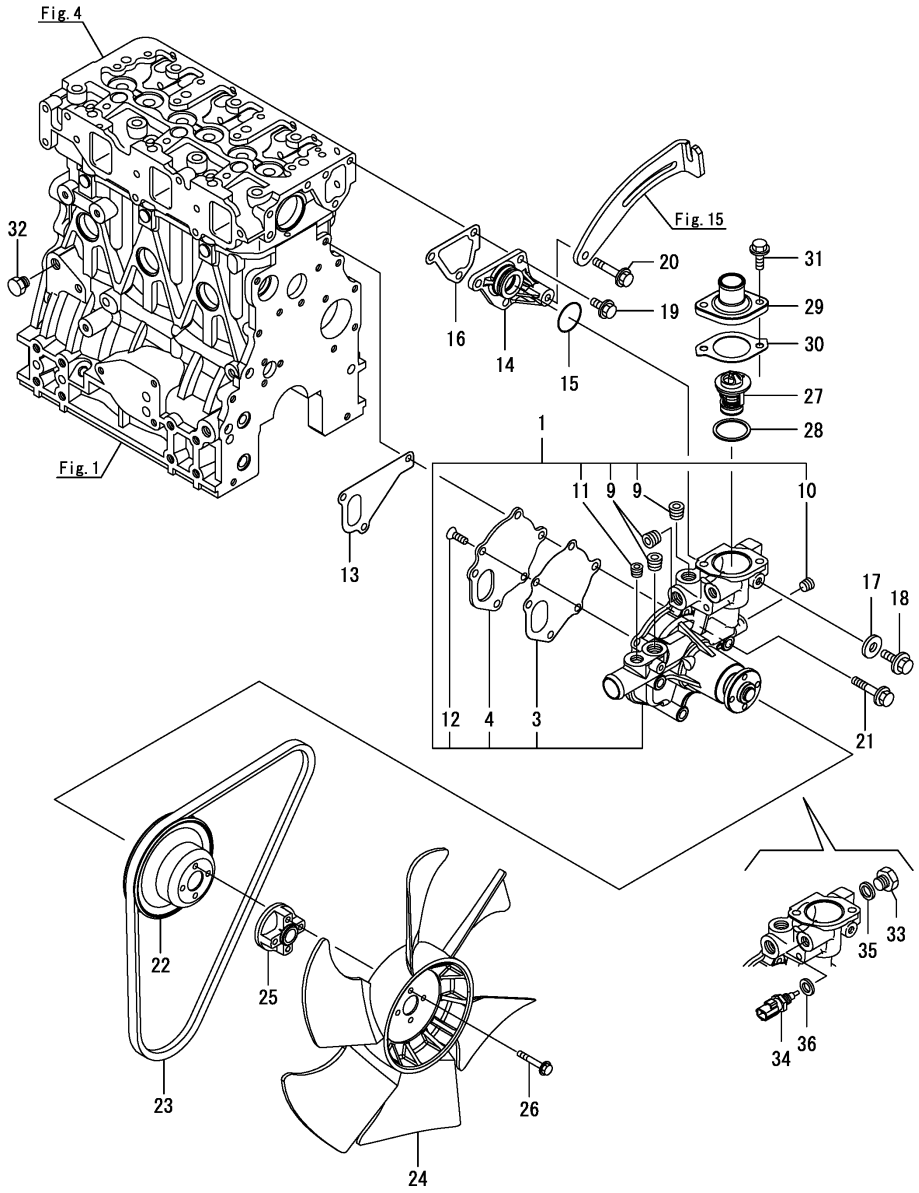


(A)=3TNV88-ZSBV
(B)=
(C)=
(D)=
(E)=
(F)=

| No. | Lev. | Parts No. | Description | Q'ty (A) | (B) | (C) | (D) | (E) | (F) | I | R |
|---|---|---|---|---|---|---|---|---|---|---|---|
| 1 | 1 | 129237-42000 | PUMP ASSY, CW | 1 | | | | | | | |
| 3 | 2 | 129100-42051 | GASKET, WATER PUMP | 1 | | | | | | | |
| 4 | 2 | 129100-42121 | PLATE, PUMP | 1 | | | | | | | |
| 9 | 2 | 129916-49740 | PLUG, R3/8 | 3 | | | | | | | |
| 10 | 2 | 23876-010000 | PLUG, R01 | 1 | | | | | | | |
| 11 | 2 | 23876-020000 | PLUG, R02 | 1 | | | | | | | |
| 12 | 2 | 26577-060142 | SCREW, 6 X 14 | 3 | | | | | | | |
| 13 | 1 | 129486-42021 | GASKET, WATER PUMP | 1 | | | | | | | |
| 14 | 1 | 129004-42040 | JOINT | 1 | | | | | | | |
| 15 | 1 | 129486-42140 | O-RING, G30 | 1 | | | | | | | |
| 16 | 1 | 124395-49840 | GASKET, THERMOSTAT | 1 | | | | | | | |
| 17 | 1 | 23414-080000 | GASKET, 8X1.0 | 1 | | | | | | | |
| 18 | 1 | 26106-080122 | BOLT, M8X 12 PLATED | 1 | | | | | | | |
| 19 | 1 | 26106-080162 | BOLT, M8X 16 PLATED | 3 | | | | | | | |
| 20 | 1 | 26106-080452 | BOLT, M8X 45 PLATED | 1 | | | | | | | |
| 21 | 1 | 26106-080602 | BOLT, M8X 60 PLATED | 3 | | | | | | | |
| 22 | 1 | 129550-42350 | V-PULLEY, D=120 | 1 | | | | | | | |
| 23 | 1 | 129612-42350 | V-BELT, A38 | 1 | | | | | | | |
| 24 | 1 | 129030-44740 | FAN, COOLING D360XUG | 1 | | | | | | | |
| 25 | 1 | 171353-44760 | SPACER, FAN | 1 | | | | | | | |
| 26 | 1 | 26106-060402 | BOLT, M6X 40 PLATED | 4 | | | | | | | |
| 27 | 1 | 129155-49801 | THERMOSTAT, 71C | 1 | | | | | | | |
| 28 | 1 | 129150-49811 | GASKET, THERMOSTAT | 1 | | | | | | | |
| 29 | 1 | 129350-49530-1 | COVER, THERMOSTAT | 1 | | | | | | | |
| 30 | 1 | 129795-49551 | GASKET | 1 | | | | | | | |
| 31 | 1 | 26106-080222 | BOLT, M8X 22 PLATED | 2 | | | | | | | |
| 32 | 1 | 171056-49120 | PLUG, DRAIN R1/4 | 1 | | | | | | | |
| 33 | 1 | 121450-42450 | PLUG, M16 | 1 | | | | | | | |
| 34 | 1 | 129927-44900 | SENSOR, WATER TEMP. | 1 | | | | | | | |
| 35 | 1 | 124465-44950 | GASKET, 16 | 1 | | | | | | | |
| 36 | 1 | 22190-120002 | WASHER, SEAL 12 | 1 | | | | | | | |

N:Old $\overset{\text{Yes}}{\underset{\text{No}}{\rightleftarrows}}$ New, Q:Old $\overset{\text{No}}{\underset{\text{Yes}}{\rightleftarrows}}$ New, R:Old $\overset{\text{Yes}}{\underset{\text{Yes}}{\rightleftarrows}}$ New, S:Old $\overset{\text{No}}{\underset{\text{No}}{\rightleftarrows}}$ New, W:Add, Z:Discontinued, F:Interchangeable by set, K:Q'ty Change

Copyright (C) YANMAR GLOBAL CS CO., LTD. All RightsReserved.

# Fig.11. FUEL INJECTION PUMP

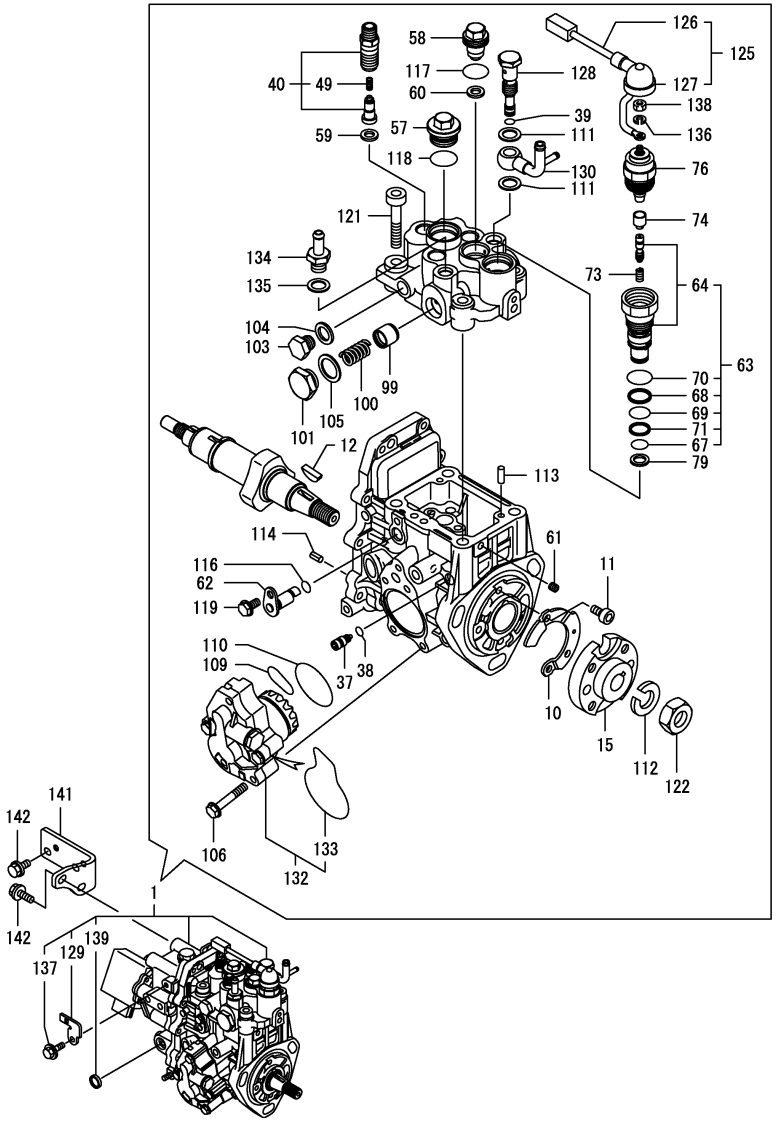


Remarks
(1)Governor(Fig.12) is incorporated in this Fuel Injection Pump(No.1).
(1)Eco pump
Make sure to update the engines ECU information when replacing the Eco pump.
Failing to do so will result in engine malfunction.

(A)=3TNV88-ZSBV (D)=
(B)= (E)=
(C)= (F)=

| No. | Lev. | Parts No. | Description | Q'ty (A) | (B) | (C) | (D) | (E) | (F) | I | R |
|---|---|---|---|---|---|---|---|---|---|---|---|
| 1 | 1 | 729237-51370 | FIE ASSY | 1 | | | | | | | 1 |
| 10 | 2 | 129008-51900 | COVER, PUMP | 1 | | | | | | | |
| 11 | 2 | 129008-51920 | BOLT, SOCKET M6X10 | 2 | | | | | | | |
| 12 | 2 | 119802-51090 | FEATHER KEY, 4X16 | 1 | | | | | | | |
| 15 | 2 | 158552-51151 | FLANGE | 1 | | | | | | | |
| 37 | 2 | 158600-51270 | STOPPER, TAPPET | 1 | | | | | | | |
| 38 | 2 | 158563-51281 | O-RING, 4D S6 | 1 | | | | | | | |
| 39 | 2 | 158563-51281 | O-RING, 4D S6 | 1 | | | | | | | |
| 40 | 2 | 129008-51390 | VALVE ASSY, DELIVERY | 3 | | | | | | | |
| 49 | 3 | 158563-51330 | SPRING, DELIVERY | 3 | | | | | | | |
| 57 | 2 | 158601-51550 | PLUG, M22 | 1 | | | | | | | |
| 58 | 2 | 119802-51560 | PLUG, M14 | 1 | | | | | | | |
| 59 | 2 | 158552-51571 | GASKET, PLUG | 3 | | | | | | | |
| 60 | 2 | 158552-51571 | GASKET, PLUG | 1 | | | | | | | |
| 61 | 2 | 158557-51570 | PLUG, RACK | 1 | | | | | | | |
| 62 | 2 | 158552-51580 | LIFTER, LINK | 1 | | | | | | | |
| 63 | 2 | 129657-51590 | TIMER ASSY | 1 | | | | | | | |
| 64 | 3 | 129657-51600 | TIMER ASSY | 1 | | | | | | | |
| 67 | 3 | 158553-51670 | O-RING | 1 | | | | | | | |
| 68 | 3 | 119802-51680 | RING, BACKUP | 1 | | | | | | | |
| 69 | 3 | 119802-51690 | O-RING | 1 | | | | | | | |
| 70 | 3 | 24356-190200 | O-RING, 4D19020 | 1 | | | | | | | |
| 71 | 3 | 24372-000150 | RING, BACK UP T2P15 | 1 | | | | | | | |
| 73 | 2 | 119852-51630 | SPRING, TIMER | 1 | | | | | | | |
| 74 | 2 | 119852-51640 | CAP, TIMER | 1 | | | | | | | |
| 76 | 2 | 119852-51650 | VALVE ASSY, SOLENOID | 1 | | | | | | | |
| 79 | 2 | 158553-51680 | GASKET, TIMER | 1 | | | | | | | |
| 99 | 2 | 158601-51770 | PISTON, ACCUMLATOR | 1 | | | | | | | |
| 100 | 2 | 158552-51781 | SPRING, ACCUMULATOR | 1 | | | | | | | |
| 101 | 2 | 158601-51790 | PLUG | 1 | | | | | | | |
| 103 | 2 | 158553-51930 | PLUG, M12 | 1 | | | | | | | |
| 104 | 2 | 22190-120002 | WASHER, SEAL 12 | 1 | | | | | | | |
| 105 | 2 | 22190-180002 | WASHER, SEAL 18 | 1 | | | | | | | |
| 106 | 2 | 158553-51770 | BOLT | 4 | | | | | | | |
| 109 | 2 | 158552-52311 | O-RING | 1 | | | | | | | |
| 110 | 2 | 158552-52400 | O-RING, 4E S42 | 1 | | | | | | | |
| 111 | 2 | 22190-120002 | WASHER, SEAL 12 | 2 | | | | | | | |
| 112 | 2 | 22217-140000 | WASHER, SPRING 14 | 1 | | | | | | | |
| 113 | 2 | 22312-050140 | PIN, PARALLEL M5X14 | 2 | | | | | | | |
| 114 | 2 | 22351-050010 | PIN, SPRING 5.0X10 | 2 | | | | | | | |
| 116 | 2 | 24311-000070 | O-RING, 1AP7.0 | 1 | | | | | | | |
| 117 | 2 | 24356-190180 | O-RING, 4D19018 | 1 | | | | | | | |
| 118 | 2 | 24356-190200 | O-RING, 4D19020 | 1 | | | | | | | |
| 119 | 2 | 26106-060102 | BOLT, M6X 10 PLATED | 1 | | | | | | | |
| 121 | 2 | 26450-080452 | BOLT, M8X 45 | 4 | | | | | | | |
| 122 | 2 | 26776-140002 | NUT, LOCK M14 | 1 | | | | | | | |
| 125 | 2 | 129927-51650 | HARNESS ASSY, WIRE | 1 | | | | | | | |
| 126 | 3 | 129927-51660 | HARNESS | 1 | | | | | | | |
| 127 | 3 | 129263-77941 | CAP, RUBBER | 1 | | | | | | | |
| 128 | 2 | 158601-51650 | JOINT, OVER FLOW | 1 | | | | | | | |
| 129 | 2 | 129927-51670 | BRACKET | 1 | | | | | | | |

N:Old $\overset{\text{Yes}}{\underset{\text{No}}{\rightleftarrows}}$ New, Q:Old $\overset{\text{No}}{\underset{\text{Yes}}{\rightleftarrows}}$ New, R:Old $\overset{\text{Yes}}{\underset{\text{Yes}}{\rightleftarrows}}$ New, S:Old $\overset{\text{No}}{\underset{\text{No}}{\rightleftarrows}}$ New, W:Add, Z:Discontinued, F:Interchangeable by set, K:Q'ty Change

++ CONTINUE ++

Copyright (C) YANMAR GLOBAL CS CO., LTD. All RightsReserved.

# Fig.11. FUEL INJECTION PUMP



(A)=3TNV88-ZSBV
(B)=
(C)=
(D)=
(E)=
(F)=

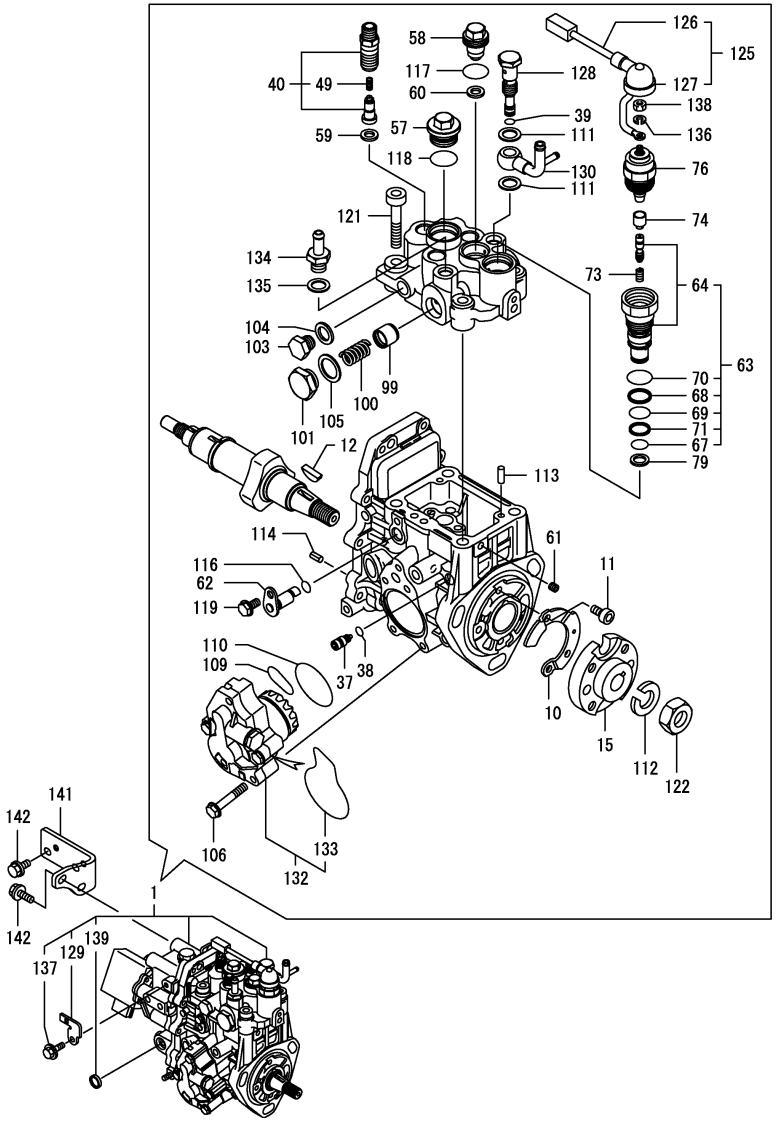


| No. | Lev. | Parts No. | Description | Q'ty (A) | (B) | (C) | (D) | (E) | (F) | I | R |
|---|---|---|---|---|---|---|---|---|---|---|---|
| 130 | 2 | 158552-51670 | JOINT, OVER FLOW | 1 | | | | | | | |
| 132 | 2 | 158552-52100 | PUMP ASSY, FUEL FEED | 1 | | | | | | | |
| 133 | 3 | 158552-52500 | O-RING | 1 | | | | | | | |
| 134 | 2 | 119934-59910 | JOINT, PIPE | 1 | | | | | | | |
| 135 | 2 | 22190-120002 | WASHER, SEAL 12 | 1 | | | | | | | |
| 136 | 2 | 22217-050000 | WASHER, SPRING 5 | 1 | | | | | | | |
| 137 | 2 | 26106-060142 | BOLT, M6X 14 PLATED | 1 | | | | | | | |
| 138 | 2 | 26716-050002 | NUT, M5 | 1 | | | | | | | |
| 139 | 2 | 27241-160000 | PLUG, 16 | 1 | | | | | | | |
| 141 | 1 | 129263-51251 | RETAINER, PUMP | 1 | | | | | | | |
| 142 | 1 | 26106-080162 | BOLT, M8X 16 PLATED | 4 | | | | | | | |

Remarks
(1)Governor(Fig.12) is incorporated in this Fuel Injection Pump(No.1).
(1)Eco pump
Make sure to update the engines ECU information when replacing the Eco pump.
Failing to do so will result in engine malfunction.

N:Old $\overset{\text{Yes}}{\underset{\text{No}}{\leftrightarrows}}$ New, Q:Old $\overset{\text{No}}{\underset{\text{Yes}}{\leftrightarrows}}$ New, R:Old $\overset{\text{Yes}}{\underset{\text{Yes}}{\leftrightarrows}}$ New, S:Old $\overset{\text{No}}{\underset{\text{No}}{\leftrightarrows}}$ New, W:Add, Z:Discontinued, F:Interchangeable by set, K:Q'ty Change

Copyright (C) YANMAR GLOBAL CS CO., LTD. All RightsReserved.

# Fig.12. GOVERNOR



(A)=3TNV88-ZSBV (D)=
(B)= (E)=
(C)= (F)=

| No. | Lev. | Parts No. | Description | Q'ty (A) | (B) | (C) | (D) | (E) | (F) | I | R |
|---|---|---|---|---|---|---|---|---|---|---|---|
| 2 | 2 | 158553-51930 | PLUG, M12 | 1 | | | | | | | |
| 20 | 2 | 129008-61301 | NUT | 1 | | | | | | | |
| 23 | 2 | 158557-61720 | SENSOR | 1 | | | | | | | |
| 24 | 2 | 158553-61780 | GEAR, SENSOR | 1 | | | | | | | |
| 25 | 2 | 22190-120002 | WASHER, SEAL 12 | 1 | | | | | | | |
| 26 | 2 | 24341-000480 | O-RING, 1AS48.0 | 1 | | | | | | | |
| 27 | 2 | 26106-060162 | BOLT, M6X 16 PLATED | 1 | | | | | | | |
| 28 | 2 | 26106-060202 | BOLT, M6X 20 PLATED | 10 | | | | | | | |
| 29 | 2 | 26106-080252 | BOLT, M8X 25 PLATED | 3 | | | | | | | |
| 29-1 | 2 | 26106-080222 | BOLT, M8X 22 PLATED | 3 | | | | | | | R |
| | (A=*2022.06) | | | | | | | | | | |

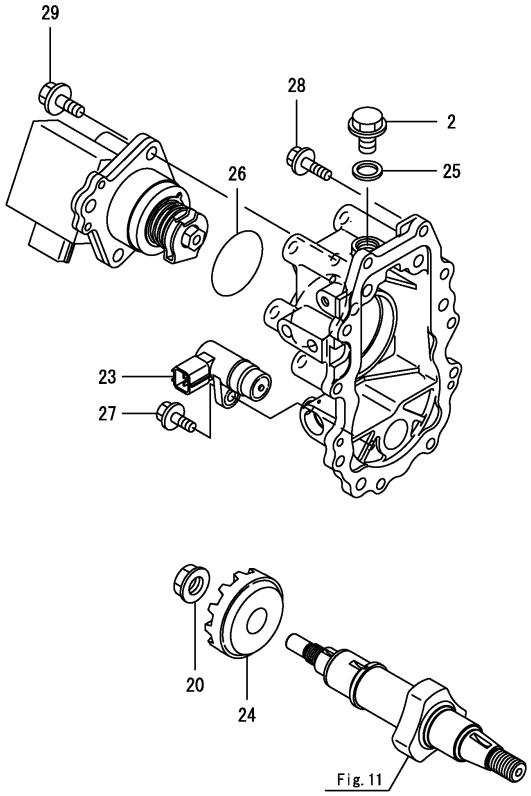


Fig. 11

Remarks
* This figure(Governor) is incorporated in the Fuel Injection Pump(Fig.11).

N:Old ⇔ New, Q:Old ⇔ New, R:Old ⇔ New, S:Old ⇔ New, W:Add, Z:Discontinued, F:Interchangeable by set, K:Q'ty Change

Copyright (C) YANMAR GLOBAL CS CO., LTD. All RightsReserved.

# Fig.13. FUEL INJECTION VALVE



(A)=3TNV88-ZSBV
(B)=
(C)=
(D)=
(E)=
(F)=

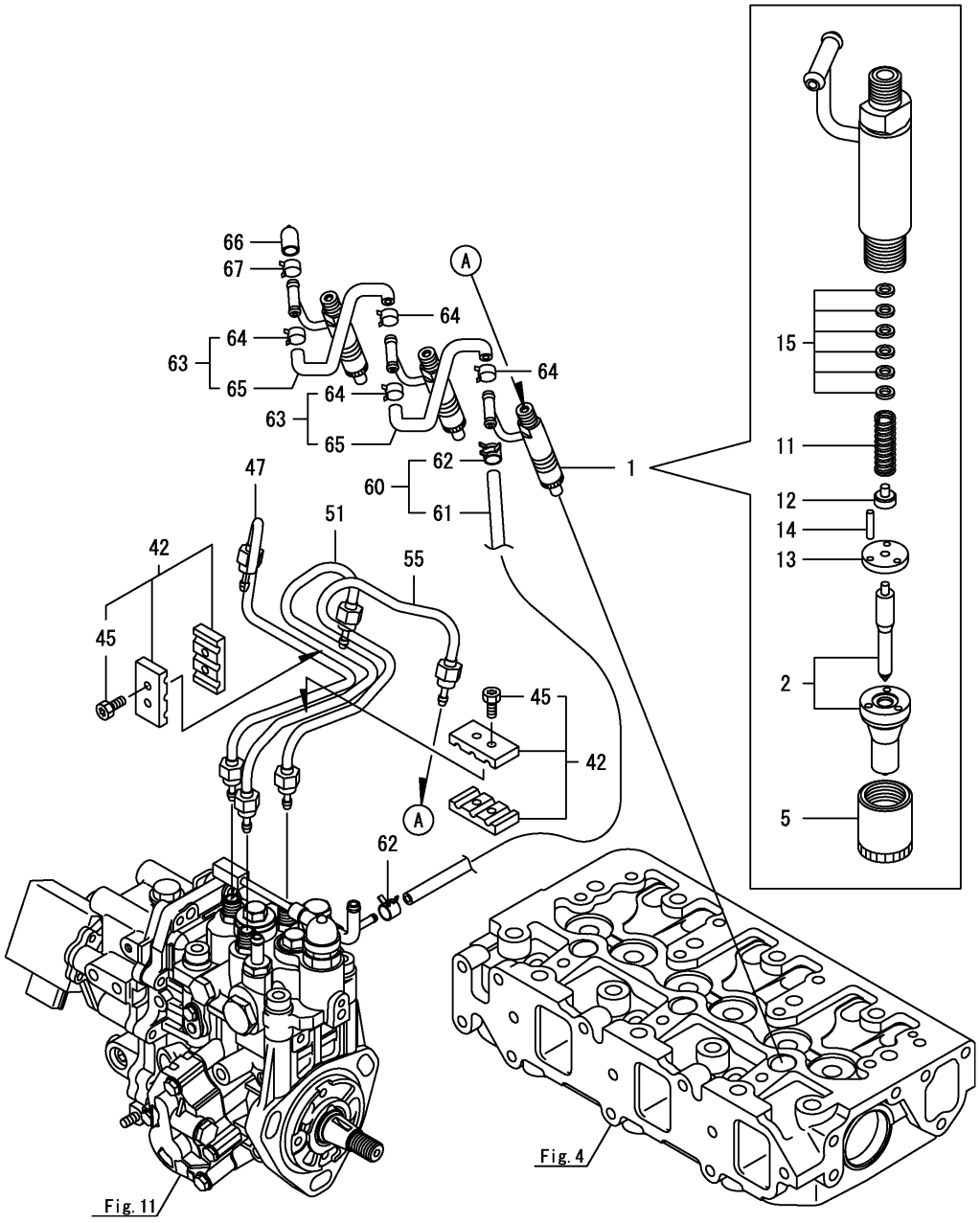


| No. | Lev. | Parts No. | Description | Q'ty (A) | (B) | (C) | (D) | (E) | (F) | I | R |
|---|---|---|---|---|---|---|---|---|---|---|---|
| 1 | 1 | 729236-53100 | VALVE ASSY,INJECTION | 3 | | | | | | | |
| 2 | 2 | 129236-53000 | NOZZLE ASSY | 3 | | | | | | | |
| 5 | 2 | 114250-53080 | NUT, NOZZLE | 3 | | | | | | | |
| 11 | 2 | 114250-53120 | SPRING, NOZZLE | 3 | | | | | | | |
| 12 | 2 | 114250-53130 | SEAT, SPRING | 3 | | | | | | | |
| 13 | 2 | 114250-53140 | SPACER, VALVE STOP | 3 | | | | | | | |
| 14 | 2 | 114250-53210 | PIN, POSITIONING | 6 | | | | | | | |
| 15 | 2 | 119803-53400 | SHIM SET | 3 | | | | | | | |
| 42 | 1 | 129150-59120 | RETAINER, PIPE | 2 | | | | | | | |
| 45 | 2 | 129150-59131 | BOLT, M4X14 | 4 | | | | | | | |
| 47 | 1 | 129004-59811 | PIPE ASSY, INJECTION | 1 | | | | | | | |
| 51 | 1 | 129004-59821 | PIPE ASSY, INJECTION | 1 | | | | | | | |
| 55 | 1 | 129004-59831 | PIPE ASSY, INJECTION | 1 | | | | | | | |
| 60 | 1 | 119802-59550 | HOSE ASSY, RETURN | 1 | | | | | | | |
| 61 | 2 | 119802-59560 | HOSE, FUEL RETURN | 1 | | | | | | | |
| 62 | 2 | 124722-59050 | CLAMP, HOSE 9 | 2 | | | | | | | |
| 63 | 1 | 129486-59551 | HOSE ASSY, RETURN | 2 | | | | | | | |
| 63-1 | 1 | 119125-59570 | HOSE ASSY, RETURN | 2 | | | | | | | N |
| | (A=*2024.01) | | | | | | | | | | |
| 64 | 2 | 124722-59050 | CLAMP, HOSE 9 | 4 | | | | | | | |
| 64-1 | 2 | 124066-59100 | CLAMP, HOSE 8 | 4 | | | | | | | N |
| | (A=*2024.01) | | | | | | | | | | |
| 65 | 2 | 129486-59510 | HOSE, FUEL RETURN | 2 | | | | | | | |
| 65-1 | 2 | 119000-59550 | HOSE, FUEL RETURN | 2 | | | | | | | N |
| | (A=*2024.01) | | | | | | | | | | |
| 66 | 1 | 119593-59581 | CAP, RETURN PIPE | 1 | | | | | | | |
| 67 | 1 | 124060-77680 | CLAMP, HOSE 10 | 1 | | | | | | | |

N:Old $\overset{\text{Yes}}{\underset{\text{No}}{\rightleftarrows}}$ New, Q:Old $\overset{\text{No}}{\underset{\text{Yes}}{\rightleftarrows}}$ New, R:Old $\overset{\text{Yes}}{\underset{\text{Yes}}{\rightleftarrows}}$ New, S:Old $\overset{\text{No}}{\underset{\text{No}}{\rightleftarrows}}$ New, W:Add, Z:Discontinued, F:Interchangeable by set, K:Q'ty Change

Copyright (C) YANMAR GLOBAL CS CO., LTD. All RightsReserved.

# Fig.14. STARTER MOTOR



(A)=3TNV88-ZSBV
(B)=
(C)=
(D)=
(E)=
(F)=

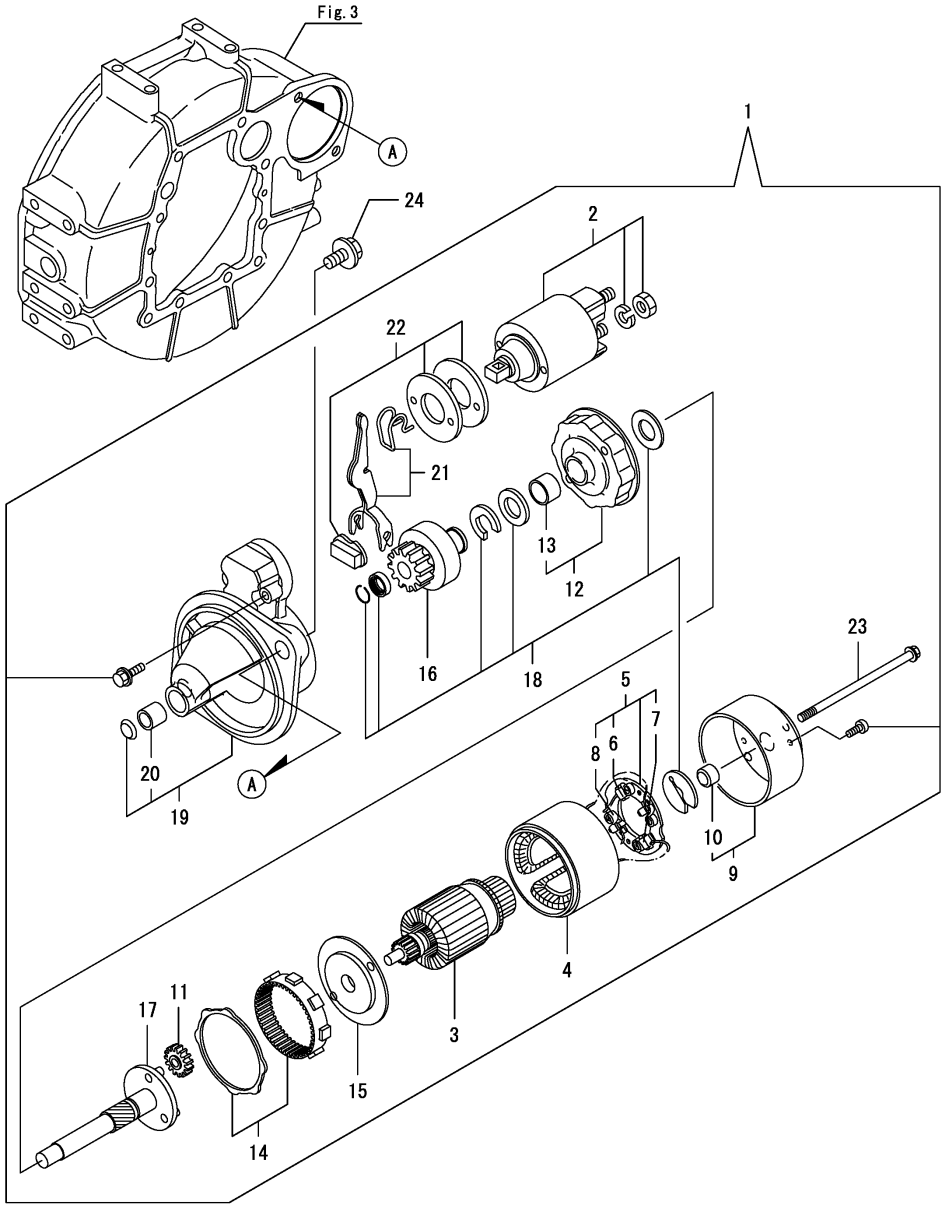


| No. | Lev. | Parts No. | Description | Q'ty (A) | (B) | (C) | (D) | (E) | (F) | I | R |
|---|---|---|---|---|---|---|---|---|---|---|---|
| 1 | 1 | 129242-77010 | STARTER ASSY | 1 | | | | | | | |
| 2 | 2 | 129698-77020 | SWITCH ASSY, MAGNET | 1 | | | | | | | |
| 3 | 2 | 129242-77100 | ARMATURE ASSY | 1 | | | | | | | |
| 4 | 2 | 129242-77110 | YOKE ASSY | 1 | | | | | | | |
| 5 | 2 | 129242-77120 | HOLDER ASSY, BRUSH | 1 | | | | | | | |
| 6 | 3 | 129242-77130 | BRUSH | 2 | | | | | | | |
| 7 | 3 | 129242-77140 | BRUSH SET | 1 | | | | | | | |
| 8 | 3 | 129242-77150 | SPRING, BRUSH | 4 | | | | | | | |
| 9 | 2 | 129242-77160 | COVER ASSY | 1 | | | | | | | |
| 10 | 3 | 129242-77170 | BEARING, COVER | 1 | | | | | | | |
| 11 | 2 | 118400-77170 | GEAR, PLANETARY | 3 | | | | | | | |
| 12 | 2 | 129242-77180 | BRACKET, CENTER | 1 | | | | | | | |
| 13 | 3 | 129698-77190 | BRACKET, CENTER | 1 | | | | | | | |
| 14 | 2 | 129698-77200 | GEAR, INTERNAL | 1 | | | | | | | |
| 15 | 2 | 129242-77210 | BRACKET, CENTER | 1 | | | | | | | |
| 16 | 2 | 129698-77220 | PINION ASSY | 1 | | | | | | | |
| 17 | 2 | 129698-77230 | SHAFT, PINION | 1 | | | | | | | |
| 18 | 2 | 129698-77250 | WASHER SET | 1 | | | | | | | |
| 19 | 2 | 129242-77260 | CASE ASSY, GEAR | 1 | | | | | | | |
| 20 | 3 | X2114535200 | BEARING, STARTER | 1 | | | | | | | |
| 21 | 2 | 129242-77270 | LEVER SET | 1 | | | | | | | |
| 22 | 2 | 129242-77280 | COVER KIT, DUST | 1 | | | | | | | |
| 23 | 2 | 124195-77770 | BOLT, THROUGH | 2 | | | | | | | |
| 24 | 1 | 26106-120252 | BOLT, M12X 25 PLATED | 2 | | | | | | | |

N:Old $\overset{\text{Yes}}{\underset{\text{No}}{\leftrightarrows}}$ New, Q:Old $\overset{\text{No}}{\underset{\text{Yes}}{\leftrightarrows}}$ New, R:Old $\overset{\text{Yes}}{\underset{\text{Yes}}{\leftrightarrows}}$ New, S:Old $\overset{\text{No}}{\underset{\text{No}}{\leftrightarrows}}$ New, W:Add, Z:Discontinued, F:Interchangeable by set, K:Q'ty Change

Copyright (C) YANMAR GLOBAL CS CO., LTD. All RightsReserved.

# Fig.15. GENERATOR



(A)=3TNV88-ZSBV
(B)=
(C)=
(D)=
(E)=
(F)=

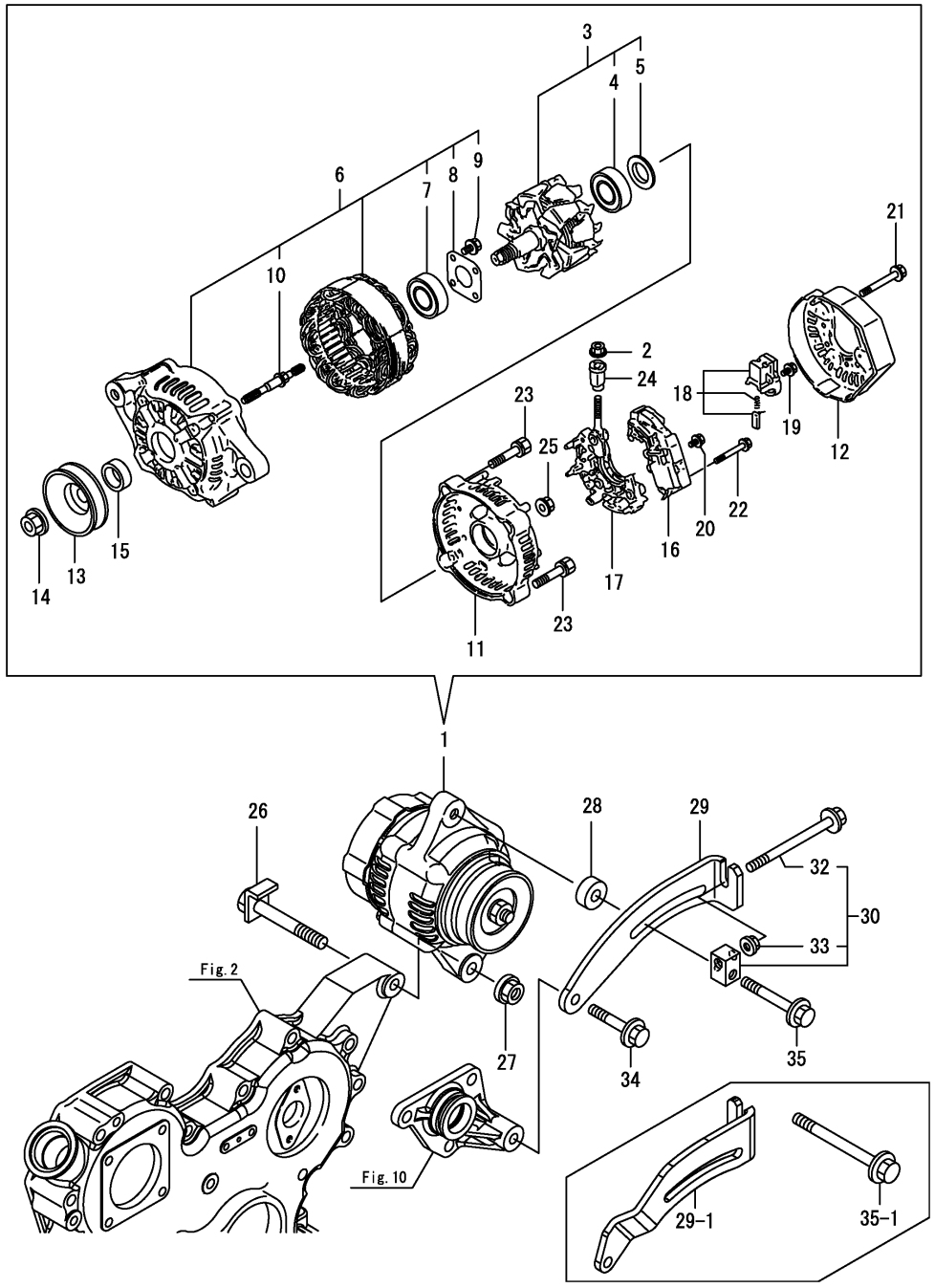


| No. | Lev. | Parts No. | Description | Q'ty (A) | (B) | (C) | (D) | (E) | (F) | I | R |
|---|---|---|---|---|---|---|---|---|---|---|---|
| 1 | 1 | 119626-77210 | ALTERNATOR, 12V-55A | 1 | | | | | | | |
| 2 | 2 | X9490561001 | NUT | 1 | | | | | | | |
| 2-1 | 2 | 129240-79310 | NUT | 1 | | | | | | N | |
| | (A=*2024.03) | | | | | | | | | | |
| 3 | 2 | 129052-77380 | ROTOR ASSY | 1 | | | | | | | |
| 4 | 3 | 123501-79240 | BEARING, BALL | 1 | | | | | | | |
| 5 | 3 | 119620-79250 | COVER, BEARING | 1 | | | | | | | |
| 6 | 2 | 129052-77422 | FRAME ASSY | 1 | | | | | | | |
| 7 | 3 | 119620-79200 | BEARING, BALL | 1 | | | | | | | |
| 8 | 3 | 119620-79210 | PLATE, RETAINER | 1 | | | | | | | |
| 9 | 3 | 119620-79220 | SCREW | 4 | | | | | | | |
| 10 | 3 | 119620-79230 | STUD | 2 | | | | | | | |
| 11 | 2 | 128401-77440 | COVER, END | 1 | | | | | | | |
| 11-1 | 2 | 124645-77440 | FRAME, END | 1 | | | | | | N | |
| | (A=*2024.03) | | | | | | | | | | |
| 12 | 2 | 119626-77450 | COVER, END | 1 | | | | | | | |
| 13 | 2 | 119620-77461 | PULLEY, GENERATOR | 1 | | | | | | | |
| 14 | 2 | 119620-77471 | NUT | 1 | | | | | | | |
| 15 | 2 | 119620-77490 | COLLAR | 1 | | | | | | | |
| 16 | 2 | 129423-77710 | REGULATOR ASSY | 1 | | | | | | | |
| 17 | 2 | 129052-79260 | HOLDER ASSY | 1 | | | | | | | |
| 18 | 2 | 129052-79270 | HOLDER ASSY, BRUSH | 1 | | | | | | | |
| 19 | 2 | 119620-79290 | SCREW | 6 | | | | | | | |
| 20 | 2 | 119620-79300 | SCREW | 1 | | | | | | | |
| 21 | 2 | 119620-79310 | BOLT | 3 | | | | | | | |
| 22 | 2 | 119620-79320 | SCREW, W/WASHER | 2 | | | | | | | |
| 23 | 2 | 119620-79330 | BOLT | 2 | | | | | | | |
| 24 | 2 | 119620-79340 | BUSH, INSULATION | 1 | | | | | | | |
| 25 | 2 | 119620-79350 | NUT | 2 | | | | | | | |
| 26 | 1 | 119740-77251 | BOLT, M10X80 | 1 | | | | | | | |
| 27 | 1 | 26306-100002 | NUT, M10 | 1 | | | | | | | |
| 28 | 1 | 119940-77270 | SPACER, GENERATOR | 1 | | | | | | Z | |
| | (A=EXXXXX) | | | | | | | | | | |
| 29 | 1 | 119940-77310 | ADJUSTER, BELT | 1 | | | | | | | |
| 29-1 | 1 | 129017-77320 | ADJUSTER, BELT | 1 | | | | | | S | |
| | (A=EXXXXX) | | | | | | | | | | |
| 30 | 1 | 119624-77351 | BLOCK ASSY, ADJUSTER | 1 | | | | | | | |
| 32 | 2 | 26106-081004 | BOLT, M8X100 PLATED | 1 | | | | | | | |
| 33 | 2 | 26306-080002 | NUT, M8 | 1 | | | | | | | |
| 34 | 1 | 26106-080452 | BOLT, M8X 45 PLATED | 1 | | | | | | | |
| 35 | 1 | 26106-080552 | BOLT, M8X 55 PLATED | 1 | | | | | | | |
| 35-1 | 1 | 129972-77341 | BOLT, ADJUSTER L=50 | 1 | | | | | | S | |
| | (A=EXXXXX) | | | | | | | | | | |

N:Old $\overset{\text{Yes}}{\underset{\text{No}}{\leftrightarrows}}$ New, Q:Old $\overset{\text{No}}{\underset{\text{Yes}}{\leftrightarrows}}$ New, R:Old $\overset{\text{Yes}}{\underset{\text{Yes}}{\leftrightarrows}}$ New, S:Old $\overset{\text{No}}{\underset{\text{No}}{\leftrightarrows}}$ New, W:Add, Z:Discontinued, F:Interchangeable by set, K:Q'ty Change

Copyright (C) YANMAR GLOBAL CS CO., LTD. All RightsReserved.

# Fig.16. ELECTRONIC CONTROL UNIT(ECU)



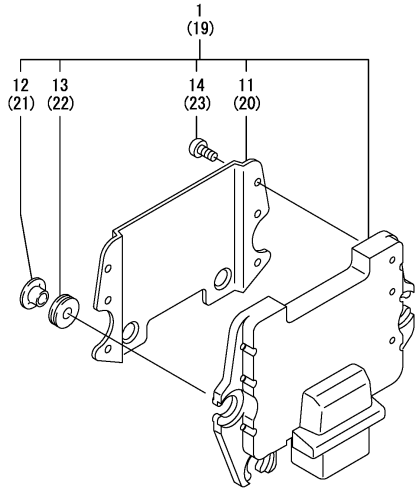


(A)=3TNV88-ZSBV
(B)=
(C)=
(D)=
(E)=
(F)=

| No. | Lev. | Parts No. | Description | Q'ty (A) | (B) | (C) | (D) | (E) | (F) | I | R |
|---|---|---|---|---|---|---|---|---|---|---|---|
| 1 | 1 | 129237-75050 | ECU ASSY | 1 | | | | | | | 1 |
| 11 | 2 | 129927-77600 | SHIELD, ECU | 1 | | | | | | | |
| 12 | 2 | 129927-77680 | COLLAR, CONTROL | 3 | | | | | | | |
| 13 | 2 | 119578-91351 | ABSORBER | 3 | | | | | | | |
| 14 | 2 | 22877-500080 | SCREW, 5X 8 | 6 | | | | | | | |
| 19 | 1 | 129927-75900 | ECU ASSY, SERVICE | 1 | | | | | | | 2 |
| 20 | 2 | 129927-77600 | SHIELD, ECU | 1 | | | | | | | |
| 21 | 2 | 129927-77680 | COLLAR, CONTROL | 3 | | | | | | | |
| 22 | 2 | 119578-91351 | ABSORBER | 3 | | | | | | | |
| 23 | 2 | 22877-500080 | SCREW, 5X 8 | 6 | | | | | | | |

Remarks
(1)Eco ECU
This part cannot be ordered.
Replace the part using a Service ECU with the proper engine information installed.
(2)Service ECU
If the proper information is not installed, the engine will not operate.
To install proper information, go to an authorized distributor.

N:Old $\overset{\text{Yes}}{\underset{\text{No}}{\rightleftarrows}}$ New, Q:Old $\overset{\text{No}}{\underset{\text{Yes}}{\rightleftarrows}}$ New, R:Old $\overset{\text{Yes}}{\underset{\text{Yes}}{\rightleftarrows}}$ New, S:Old $\overset{\text{No}}{\underset{\text{No}}{\rightleftarrows}}$ New, W:Add, Z:Discontinued, F:Interchangeable by set, K:Q'ty Change

Copyright (C) YANMAR GLOBAL CS CO., LTD. All RightsReserved.

# Fig.17. GASKET SET



(A)=3TNV88-ZSBV
(B)=
(C)=
(D)=
(E)=
(F)=

| No. | Lev. | Parts No. | Description | Q'ty (A) | (B) | (C) | (D) | (E) | (F) | I | R |
|---|---|---|---|---|---|---|---|---|---|---|---|

| Spec. Code | Part | (A) | (B) | (C) | (D) | (E) | (F) | Description | Specification |
|---|---|---|---|---|---|---|---|---|---|

Remarks
(1)Optional parts(Parts number will be informed later).

N:Old $\overset{\text{Yes}}{\underset{\text{No}}{\leftrightarrows}}$ New, Q:Old $\overset{\text{No}}{\underset{\text{Yes}}{\leftrightarrows}}$ New, R:Old $\overset{\text{Yes}}{\underset{\text{Yes}}{\leftrightarrows}}$ New, S:Old $\overset{\text{No}}{\underset{\text{No}}{\leftrightarrows}}$ New, W:Add, Z:Discontinued, F:Interchangeable by set, K:Q'ty Change

Copyright (C) YANMAR GLOBAL CS CO., LTD. All RightsReserved.

# Parts No. Index

| Parts No. | Fig. No. | Ref. No. |
|---|---|---|
| 114250-39450 | 9 | 30 |
| 114250-53080 | 13 | 5 |
| 114250-53120 | 13 | 11 |
| 114250-53130 | 13 | 12 |
| 114250-53140 | 13 | 13 |
| 114250-53210 | 13 | 14 |
| 118400-77170 | 14 | 11 |
| 119000-59550 | 13 | 65 -1 |
| 119125-59570 | 13 | 63 -1 |
| 119131-18320 | 6 | 5 |
| 119578-91351 | 16 | 13 |
| | | 22 |
| 119593-59581 | 13 | 66 |
| 119609-32040 | 2 | 12 |
| 119620-01750 | 3 | 3 |
| 119620-77461 | 15 | 13 |
| 119620-77471 | 15 | 14 |
| 119620-77490 | 15 | 15 |
| 119620-79200 | 15 | 7 |
| 119620-79210 | 15 | 8 |
| 119620-79220 | 15 | 9 |
| 119620-79230 | 15 | 10 |
| 119620-79250 | 15 | 5 |
| 119620-79290 | 15 | 19 |
| 119620-79300 | 15 | 20 |
| 119620-79310 | 15 | 21 |
| 119620-79320 | 15 | 22 |
| 119620-79330 | 15 | 23 |
| 119620-79340 | 15 | 24 |
| 119620-79350 | 15 | 25 |
| 119624-77351 | 15 | 30 |
| 119625-11880 | 4 | 29 |
| 119626-07900 | 4 | 53 |
| 119626-77210 | 15 | 1 |
| 119626-77450 | 15 | 12 |
| 119640-01640 | 3 | 9 |
| 119740-77251 | 15 | 26 |
| 119802-01561 | 2 | 8 |
| 119802-03070 | 4 | 38 A |
| 119802-03110 | 4 | 40 |
| 119802-03121 | 4 | 41 |
| 119802-03130 | 4 | 42 |
| 119802-03141 | 4 | 43 |
| 119802-11260 | 4 | 4 |
| 119802-11270 | 4 | 5 |
| 119802-11870 | 4 | 28 |
| 119802-25071 | 7 | 17 |
| 119802-25101 | 7 | 11 |
| 119802-25901 | 7 | 16 |
| 119802-35100 | 9 | 21 |

| Parts No. | Fig. No. | Ref. No. |
|---|---|---|
| 119802-39450 | 9 | 32 |
| 119802-51090 | 11 | 12 |
| 119802-51560 | 11 | 58 |
| 119802-51680 | 11 | 68 |
| 119802-51690 | 11 | 69 |
| 119802-59550 | 13 | 60 |
| 119802-59560 | 13 | 61 |
| 119803-01520 | 2 | 7 |
| 119803-21200 | 8 | 5 |
| 119803-25050 | 7 | 10 |
| 119803-53400 | 13 | 15 |
| 119803-77830 | 4 | 56 |
| 119852-51630 | 11 | 73 |
| 119852-51640 | 11 | 74 |
| 119852-51650 | 11 | 76 |
| 119865-21600 | 8 | 16 |
| 119934-01800 | 2 | 6 |
| 119934-59910 | 11 | 134 |
| 119940-77270 | 15 | 28 |
| 119940-77310 | 15 | 29 |
| 120130-11860 | 4 | 59 |
| 120270-54410 | 4 | 31 |
| 121023-01551 | 2 | 22 |
| 121111-21501 | 8 | 12 |
| 121400-11340 | 4 | 24 |
| 121450-42450 | 10 | 33 |
| 121520-34810 | 9 | 17 |
| 121550-23200 | 8 | 31 |
| 121850-21680 | 8 | 11 |
| 121850-51960 | 2 | 13 |
| 123501-79240 | 15 | 4 |
| 123900-13610 | 6 | 3 |
| 123900-13630 | 6 | 4 |
| 124060-01050 | 1 | 5 |
| 124060-77680 | 13 | 67 |
| 124066-59100 | 13 | 64 -1 |
| 124160-01751 | 2 | 9 |
| | 4 | 36 |
| 124160-01910 | 1 | 7 |
| | | 8 |
| 124160-11360 | 4 | 49 |
| 124160-39140 | 9 | 31 |
| 124195-77770 | 14 | 23 |
| 124240-01871 | 2 | 10 |
| 124395-49840 | 10 | 16 |
| 124460-11340 | 4 | 25 |
| 124465-44950 | 10 | 35 |
| 124645-77440 | 15 | 11 -1 |
| 124722-59050 | 13 | 62 |
| | | 64 |

| Parts No. | Fig. No. | Ref. No. |
|---|---|---|
| 128401-77440 | 15 | 11 |
| 129001-01250 | 1 | 6 |
| 129001-01340 | 1 | 29 |
| 129001-02931 | 1 | 30 |
| 129001-12110 | 5 | 5 |
| 129001-32001 | 9 | 1 |
| 129004-03010 | 4 | 38 |
| 129004-03080 | 5 | 1 |
| 129004-11241 | 4 | 1 |
| 129004-11251 | 4 | 2 |
| 129004-11310 | 4 | 46 |
| 129004-11350 | 4 | 37 |
| 129004-11650 | 4 | 8 |
| 129004-11900 | 4 | 30 |
| 129004-12101 | 5 | 3 |
| 129004-13129 | 6 | 2 |
| 129004-13200 | 6 | 7 |
| 129004-21650 | 8 | 9 |
| 129004-34802 | 9 | 16 |
| 129004-42040 | 10 | 14 |
| 129004-59811 | 13 | 47 |
| 129004-59821 | 13 | 51 |
| 129004-59831 | 13 | 55 |
| 129005-11100 | 4 | 20 |
| 129005-22080 | 8 | 17 |
| 129005-22500 | 8 | 19 |
| 129005-22900 | 8 | 37 |
| 129005-22950 | 8 | 39 |
| 129005-59830 | 9 | 33 |
| 129008-11700 | 4 | 13 |
| 129008-21000 | 8 | 1 |
| 129008-51390 | 11 | 40 |
| 129008-51900 | 11 | 10 |
| 129008-51920 | 11 | 11 |
| 129008-61301 | 12 | 20 |
| 129008-77800 | 4 | 57 |
| 129008-77820 | 4 | 58 |
| 129017-77320 | 15 | 29 -1 |
| 129030-44740 | 10 | 24 |
| 129052-77380 | 15 | 3 |
| 129052-77422 | 15 | 6 |
| 129052-79260 | 15 | 17 |
| 129052-79270 | 15 | 18 |
| 129100-01580 | 3 | 1 |
| | | 16 |
| | 8 | 2 |
| 129100-01640 | 3 | 17 |
| 129100-01730 | 3 | 6 |
| 129100-11112 | 4 | 21 |
| 129100-23910 | 8 | 34 |

| Parts No. | Fig. No. | Ref. No. |
|---|---|---|
| 129100-35140 | 9 | 23 |
| 129100-35301 | 9 | 19 |
| 129100-42051 | 10 | 3 |
| 129100-42121 | 10 | 4 |
| 129128-21590 | 8 | 13 |
| 129129-14580 | 7 | 3 |
| 129136-01780 | 3 | 8 |
| 129150-01200 | 1 | 28 |
| 129150-02020 | 1 | 10 |
| 129150-02450 | 7 | 4 |
| 129150-02871 | 1 | 33 |
| 129150-02931 | 1 | 25 |
| 129150-02941 | 1 | 36 |
| 129150-03070 | 4 | 39 |
| 129150-11230 | 4 | 9 |
| 129150-11280 | 4 | 7 |
| 129150-11370 | 4 | 12 |
| 129150-11750 | 4 | 11 |
| 129150-11810 | 4 | 60 |
| 129150-13110 | 6 | 1 |
| 129150-14101 | 7 | 7 |
| 129150-14200 | 7 | 1 |
| 129150-14400 | 7 | 2 |
| 129150-23601 | 8 | 32 |
| 129150-23611 | 8 | 35 |
| 129150-25301 | 7 | 15 |
| 129150-32020 | 9 | 14 |
| 129150-35042 | 9 | 18 |
| 129150-35111 | 9 | 24 |
| 129150-35170 | 9 | 39 |
| 129150-49811 | 10 | 28 |
| 129150-59120 | 13 | 42 |
| 129150-59131 | 13 | 45 |
| 129150-77511 | 5 | 8 |
| 129155-49801 | 10 | 27 |
| 129202-22300 | 8 | 25 |
| 129236-53000 | 13 | 2 |
| 129237-13500 | 6 | 8 |
| 129237-42000 | 10 | 1 |
| 129237-75050 | 16 | 1 |
| 129240-35800 | 9 | 26 |
| 129240-79310 | 15 | 2 -1 |
| 129242-77010 | 14 | 1 |
| 129242-77100 | 14 | 3 |
| 129242-77110 | 14 | 4 |
| 129242-77120 | 14 | 5 |
| 129242-77130 | 14 | 6 |
| 129242-77140 | 14 | 7 |
| 129242-77150 | 14 | 8 |
| 129242-77160 | 14 | 9 |

# Parts No. Index


| Parts No. | Fig. No. | Ref. No. |
|---|---|---|
| 129242-77170 | 14 | 10 |
| 129242-77180 | 14 | 12 |
| 129242-77210 | 14 | 15 |
| 129242-77260 | 14 | 19 |
| 129242-77270 | 14 | 21 |
| 129242-77280 | 14 | 22 |
| 129263-51251 | 11 | 141 |
| 129263-77941 | 11 | 127 |
| 129350-49530-1 | 10 | 29 |
| 129410-03990 | 5 | 2 |
| 129423-77710 | 15 | 16 |
| 129486-01670 | 3 | 20 |
| 129486-42021 | 10 | 13 |
| 129486-42140 | 10 | 15 |
| 129486-59510 | 13 | 65 |
| 129486-59551 | 13 | 63 |
| 129550-42350 | 10 | 22 |
| 129612-01600 | 3 | 2 |
| 129612-42350 | 10 | 23 |
| 129648-07900 | 4 | 52 |
| 129657-51590 | 11 | 63 |
| 129657-51600 | 11 | 64 |
| 129698-77020 | 14 | 2 |
| 129698-77190 | 14 | 13 |
| 129698-77200 | 14 | 14 |
| 129698-77220 | 14 | 16 |
| 129698-77230 | 14 | 17 |
| 129698-77250 | 14 | 18 |
| 129795-01780 | 3 | 19 |
| 129795-01950 | 2 | 11 |
| 129795-02412 | 1 | 13 |
| 129795-11120 | 4 | 22 |
| 129795-11180 | 4 | 23 |
| 129795-21661 | 8 | 10 |
| 129795-49551 | 10 | 30 |
| 129916-49740 | 10 | 9 |
| 129927-44900 | 10 | 34 |
| 129927-51650 | 11 | 125 |
| 129927-51660 | 11 | 126 |
| 129927-51670 | 11 | 129 |
| 129927-75900 | 16 | 19 |
| 129927-77600 | 16 | 11 |
| | | 20 |
| 129927-77680 | 16 | 12 |
| | | 21 |
| 129972-77341 | 15 | 35 -1 |
| 158552-51151 | 11 | 15 |
| 158552-51571 | 11 | 59 |
| | | 60 |
| 158552-51580 | 11 | 62 |
| 158552-51670 | 11 | 130 |
| 158552-51781 | 11 | 100 |
| 158552-52100 | 11 | 132 |
| 158552-52311 | 11 | 109 |
| 158552-52400 | 11 | 110 |
| 158552-52500 | 11 | 133 |
| 158553-51670 | 11 | 67 |
| 158553-51680 | 11 | 79 |
| 158553-51770 | 11 | 106 |
| 158553-51930 | 11 | 103 |
| | 12 | 2 |
| 158553-61780 | 12 | 24 |
| 158557-51570 | 11 | 61 |
| 158557-61720 | 12 | 23 |
| 158563-51281 | 11 | 38 |
| | | 39 |
| 158563-51330 | 11 | 49 |
| 158600-51270 | 11 | 37 |
| 158601-51550 | 11 | 57 |
| 158601-51650 | 11 | 128 |
| 158601-51770 | 11 | 99 |
| 158601-51790 | 11 | 101 |
| 171031-11741 | 2 | 25 |
| 171051-01921 | 1 | 9 |
| 171056-49120 | 10 | 32 |
| 171340-77520 | 5 | 9 |
| 171353-44760 | 10 | 25 |
| 22190-080002 | 2 | 14 |
| | 9 | 34 |
| | | 36 |
| 22190-100002 | 9 | 37 |
| 22190-120002 | 10 | 36 |
| | 11 | 104 |
| | | 111 |
| | | 135 |
| | 12 | 25 |
| 22190-180002 | 11 | 105 |
| 22190-220002 | 3 | 11 |
| 22217-050000 | 11 | 136 |
| 22217-140000 | 11 | 112 |
| 22252-000260 | 8 | 26 |
| 22312-050140 | 11 | 113 |
| 22351-030010 | 8 | 8 |
| 22351-050010 | 11 | 114 |
| 22351-060012 | 4 | 32 |
| 22512-070140 | 7 | 8 |
| | 8 | 6 |
| 22857-500100 | 4 | 47 |
| | | 48 |
| 22877-500080 | 16 | 14 |
| 22877-500080 | 16 | 23 |
| 23065-120230 | 9 | 27 |
| 23080-014000 | 9 | 28 |
| 23414-080000 | 10 | 17 |
| 23857-030000 | 9 | 35 |
| 23876-010000 | 10 | 10 |
| 23876-020000 | 10 | 11 |
| 24311-000070 | 11 | 116 |
| 24311-000120 | 4 | 50 |
| 24311-000320 | 2 | 15 |
| | | 26 |
| | 4 | 51 |
| 24341-000240 | 2 | 23 |
| 24341-000480 | 12 | 26 |
| 24356-190180 | 11 | 117 |
| 24356-190200 | 11 | 70 |
| | | 118 |
| 24372-000150 | 11 | 71 |
| 26106-060102 | 11 | 119 |
| 26106-060142 | 11 | 137 |
| 26106-060162 | 2 | 24 |
| | 12 | 27 |
| 26106-060202 | 12 | 28 |
| 26106-060402 | 10 | 26 |
| 26106-080122 | 10 | 18 |
| 26106-080142 | 4 | 54 |
| | 7 | 9 |
| 26106-080162 | 2 | 16 |
| | | 17 |
| | 3 | 12 |
| | 4 | 55 |
| | 10 | 19 |
| | 11 | 142 |
| 26106-080202 | 5 | 6 |
| | 9 | 29 |
| 26106-080222 | 10 | 31 |
| | 12 | 29 -1 |
| 26106-080252 | 3 | 13 |
| | 4 | 33 |
| | 5 | 10 |
| | 12 | 29 |
| 26106-080302 | 2 | 18 |
| 26106-080352 | 3 | 21 |
| | 4 | 34 |
| | 9 | 20 |
| 26106-080402 | 7 | 14 |
| 26106-080452 | 3 | 14 |
| | 10 | 20 |
| | 15 | 34 |
| 26106-080502 | 3 | 15 |
| 26106-080502 | 4 | 35 |
| 26106-080552 | 2 | 19 |
| | 15 | 35 |
| 26106-080602 | 10 | 21 |
| 26106-080652 | 5 | 11 |
| 26106-080802 | 5 | 7 |
| 26106-080852 | 2 | 20 |
| 26106-081004 | 15 | 32 |
| 26106-100202 | 6 | 9 |
| 26106-120252 | 14 | 24 |
| 26206-100252 | 3 | 4 |
| 26206-100302 | 3 | 5 |
| 26226-080182 | 4 | 6 |
| 26306-080002 | 2 | 21 |
| | 6 | 6 |
| | | 10 |
| | 15 | 33 |
| 26306-100002 | 15 | 27 |
| 26366-060002 | 9 | 38 |
| 26450-060252 | 9 | 15 |
| 26450-080452 | 11 | 121 |
| 26577-060142 | 10 | 12 |
| 26716-050002 | 11 | 138 |
| 26776-140002 | 11 | 122 |
| 27241-120000 | 1 | 14 |
| 27241-160000 | 11 | 139 |
| 27241-300000 | 1 | 15 |
| 27241-400000 | 4 | 19 |
| 27310-080001 | 4 | 26 |
| 729005-01560 | 1 | 1 |
| 729236-53100 | 13 | 1 |
| 729237-51370 | 11 | 1 |
| 729402-23100 | 8 | 27 |
| 729630-01500 | 2 | 1 |
| X2114535200 | 14 | 20 |
| X9490561001 | 15 | 2 |